INCH-POUND

MIL-S-19500/440A(ER)
10 June 1991
SUPERSEDING
MIL-S-19500/440(ER)
17 November 1970

MILITARY SPECIFICATION

SEMICONDUCTOR DEVICE, TRANSISTOR, NPN, SILICON, POWER TYPE 2N5927, JANTX AND JANTXV

This specification is approved for use by US Army Laboratory Command, Department of the Army, and is available for use by all Departments and Agencies of the Department of Defense.

1. SCOPE

1.1 Scope. This specification covers the detail requirements for a NPN, silicon, power transistor. Two levels of product assurance are provided for each device type as specified in MIL-S-19500.

1.2 Physical dimensions. See figure 1.

1.3 Maximum ratings.

P_T		V_{CBO}	V_{CEO}	V_{EBO}	I_B	I_C 1/	T_{STG} and T_{op}	T_J	$R_{\theta JC}$
T_C = +25°C 1/	T_C = +100°C 1/								
W	W	V dc	V dc	V dc	A dc	A dc	°C	°C	°C/W
350	200	150	120	10	20	100	-65 to +200	+200	0.5

1/ Between T_C +25°C and T_C = +200°C, linear derating factor (average) = 2.0 W/°C.
2/ Pulsed (see 4.5.1) = 120 A.

Beneficial comments (recommendations, additions, deletions) and any pertinent data which may be of use in improving this document should be addressed to: US Army Laboratory Command, ATTN: SLCET-RE, Fort Monmouth, NJ 07703-5302 by using the Standardization Document Improvement (DD Form 1426) appearing at the end of this document or by letter.

AMSC N/A
FSC 5961

DISTRIBUTION STATEMENT A. Approved for public release; distribution is unlimited.

1.4 Primary electrical characteristics.

	h_{FE} 1/				V_{BE} 1/		$V_{CE(sat)}$ 1/			
	I_C = 40 A dc, V_{CE} = 2 V dc	I_C = 120 A dc, V_{CE} = 4 V dc	I_C = 70 A dc, V_{CE} = 2 V dc	I_C = 20 A dc, V_{CE} = 2 V dc	I_C = 120 A dc, V_{CE} = 4 V dc	I_C = 70 A dc, V_{CE} = 2 V dc	I_C = 120 A dc, I_B = 24 A dc		I_C = 70 A dc, I_B = 7 A dc	
	Min	Min	Min	Min	Min	Min	Min	Max	Min	Max
	15	5.0	10	30				2.0 V dc		0.75 V dc
	Max	Max	Max	Max	Max	Max				
	50		40	120	3.0	1.5				

1/ Pulsed (see 4.5.1).

Limits	$\lvert h_{fe} \rvert$	t_{on}	t_s	t_f
	V_{CE} = 10 V dc, I_C = 5 A dc, f = 100 kHz	I_C = 70 A dc		
Min	5			
Max	20	7.0 µs	4.0 µs	6.0 µs

2. APPLICABLE DOCUMENTS

2.1 Government documents.

2.1.1 Specifications, standards, and handbooks. The following specifications, standards, and handbooks form a part of this document to the extent specified herein. Unless otherwise specified, the issues of these documents are those listed in the issue of the Department of Defense Index of Specifications and Standards (DODISS) and supplement thereto, cited in the solicitation (see 6.2).

SPECIFICATION

MILITARY

MIL-S-19500 - Semiconductor Devices, General Specification for.

STANDARD

MILITARY

MIL-STD-750 - Test Methods for Semiconductor Devices.

(Unless otherwise indicated, copies of federal and military specifications, standards, and handbooks are available from the Standardization Documents Order Desk, Building 4D, 700 Robbins Avenue, Philadelphia, PA 19111-5094.)

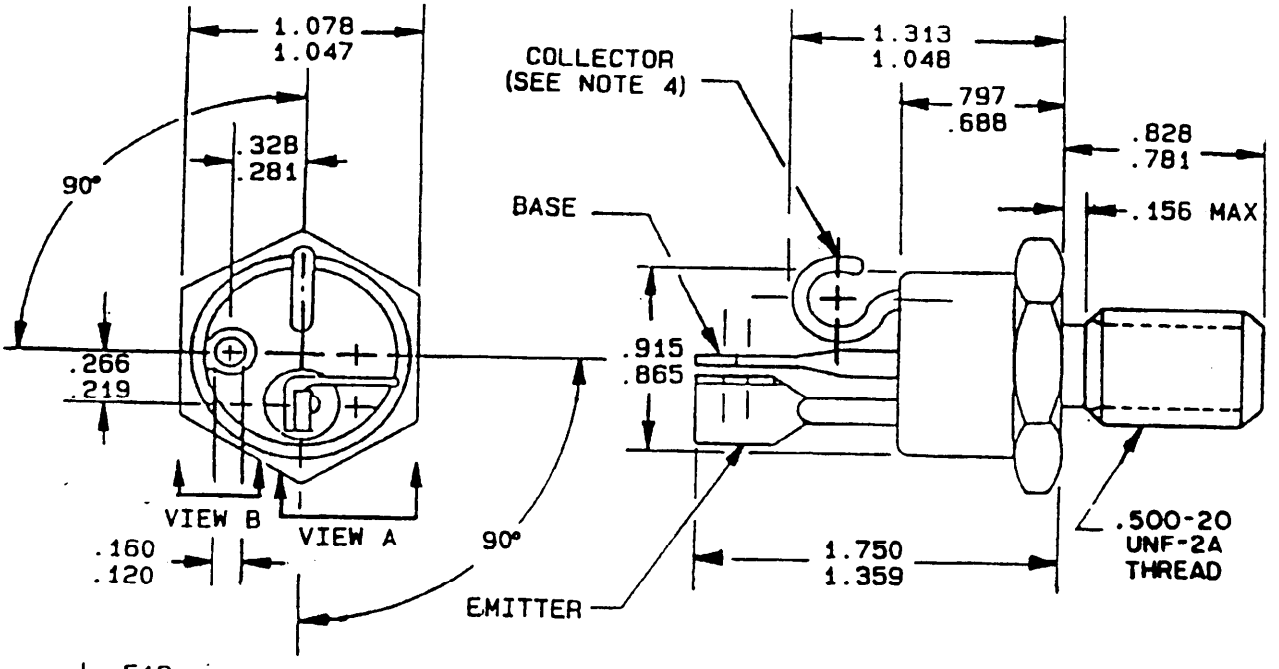

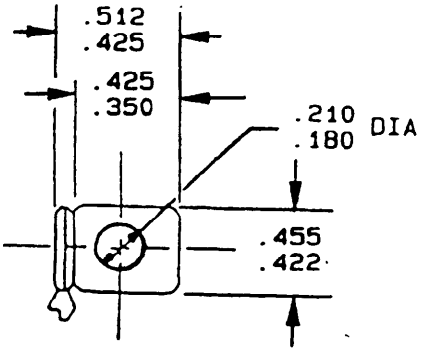

VIEW A

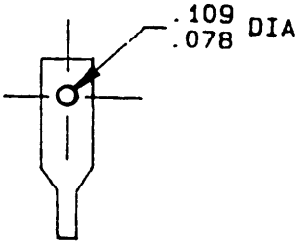

VIEW B

Inches	mm	Inches	mm
.078	1.98	.500	12.70
.109	2.77	.512	13.00
.120	3.05	.688	17.48
.156	3.96	.781	19.48
.160	4.06	.797	20.34
.180	4.57	.828	21.03
.210	5.33	.865	21.97
.219	5.56	.915	23.24
.266	6.76	1.047	26.35
.281	7.14	1.048	26.62
.328	8.33	1.078	27.38
.350	8.89	1.313	33.35
.422	10.72	1.359	34.42
.425	10.80	1.750	44.45
.455	11.56		

NOTES:
1. Dimensions are in inches.
2. Metric equivalents are given for general information only.
3. Maximum pitch diameter of plated thread shall be basic P.D. (.4675).
4. Collector is electrically connected to case.

FIGURE 1. Physical dimensions.

2.2 Order of precedence. In the event of a conflict between the text of this document and the references cited herein (except for related associated detail specifications, specification sheets, or MS standards), the text of this document takes precedence. Nothing in this document, however, supersedes applicable laws and regulations unless a specific exemption has been obtained.

3. REQUIREMENTS

3.1 Detail specification. The individual item requirements shall be in accordance with MIL-S-19500, and as specified herein.

3.2 Abbreviations, symbols, and definitions. The abbreviations, symbols, and definitions used herein shall be as specified in MIL-S-19500.

3.3 Design, construction, and physical dimensions. The design, construction, and physical dimensions shall be as specified in MIL-S-19500, and figure 1 herein.

3.3.1 Lead material and finish. Lead material shall be Kovar or Alloy 52 and a copper core is permitted. Lead finish shall be gold or tin or solder. Where a choice of lead material or finish is desired, it shall be specified in the acquisition document (see 6.2).

3.4 Marking. Devices shall be marked in accordance with MIL-S-19500, except at the option of the manufacturer, the following marking may be omitted from the body of the device:

a. Country of origin.

b. Manufacturer's identification.

4. QUALITY ASSURANCE PROVISIONS

4.1 Sampling and inspection. Sampling and inspection shall be in accordance with MIL-S-19500, and as specified herein.

4.1.1 Inspection lot. Applicable to the semiconductor devices covered herein, the term "inspection lot" shall be as defined in 4.3.2.1 of MIL-S-19500 except that the 6-week period time limitation stipulated therein shall be considered as not compulsory.

4.2 Qualification inspection. Qualification inspection shall be in accordance with MIL-S-19500, and as specified herein.

4.2.1 Group E inspection. Group E inspection shall be conducted in accordance with MIL-S-19500 and table V herein.

4.3 Screening (JANTX and JANTXV levels only). Screening shall be in accordance with MIL-S-19500 (table II), and as specified herein. The following measurements shall be made in accordance with table I herein. Devices that exceed the limits of table I herein shall not be acceptable.

Screen (see table II of MIL-S-19500)	Measurement JANTX and JANTXV levels
4	5,000 G minimum
9	Not applicable.
11	I_{CES1} and h_{FE1}.
12	Burn-in (see 4.3.1).
13	ΔI_{CES1} = 100 percent of initial value or 200 µA dc, whichever is greater. Δh_{FE1} = ±25 percent of subgroup 2, table I herein.

1/ This test shall be performed any time before screen 10.

4.3.1 Power burn-in conditions. Power burn-in conditions are in accordance with MIL-STD-750, method 1039, test condition B and as follows:

T_A = 30°C ±5°C.

$V_{CE} \geq$ 4.5 V dc.

T_J = 187.5°C ±12.5°C.

NOTE: No heat sink or forced air cooling on the devices shall be permitted.

4.3.2 Thermal resistance. Thermal resistance measurements shall be conducted in accordance with method 3131 of MIL-STD-750. The following details shall apply:

a. I_M measurement - - - - - - - - - - - - - - - 10 mA.

b. V_{CE} measurement voltage- - - - - - - - - - 25 V.

c. I_H collector heating current - - - - - - - 10 A.

d. V_H collector-emitter heating voltage - - - 20 V.

e. t_H heating time - - - - - - - - - - - - - - Steady-state (see MIL-STD-750, method 2131 for definition).

f. t_{MD} measurement delay time - - - - - - - - 20 µs maximum.

g. t_{SW} sample window time - - - - - - - - - - 10 µs (maximum).

4.4 Quality conformance inspection. Quality conformance inspection shall be in accordance with MIL-S-19500, and as specified herein.

4.4.1 Group A inspection. Group A inspection shall be conducted in accordance with MIL-S-19500, and table I herein.

4.4.2 Group B inspection. Group B inspection shall be conducted in accordance with the conditions specified for subgroup testing in table IVb (JAN and JANTX) of MIL-S-19500, and table II herein. Electrical measurements (end points) and delta requirements shall be in accordance with the applicable steps of table V herein.

TABLE I. Group A inspection.

Inspection	MIL-STD-750		Symbol	Limits		Unit
	Method	Conditions		Min	Max	
Subgroup 1						
Visual and mechanical examination	2071					
Subgroup 2						
Breakdown voltage, collector to emitter	3011	Bias condition D, pulsed (see 4.5.1), I_C = 200 mA dc	$V_{(BR)CEO}$	120		V dc
Collector to emitter cutoff current	3041	Bias condition C, V_{BE} = 0 V dc; V_{CE} = 150 V dc	I_{CES1}		2	mA dc
Emitter to base current	3061	Bias condition D, V_{EB} = 10 V dc	I_{EBO}		1	mA dc
Base emitter voltage	3066	Test condition B, pulsed (see 4.5.1), I_C = 70 A dc, V_{CE} = 2 V dc	V_{BE1}		1.5	V dc
Base emitter voltage	3066	Test condition B, pulsed (see 4.5.1), I_C = 120 A dc, V_{CE} = 4.0 V dc	V_{BE2}		3.0	V dc
Collector to emitter voltage (saturated)	3071	I_C = 70 A dc, pulsed (see 4.5.1), I_B = 7 A dc	$V_{CE(sat)1}$		0.75	V dc
Collector to emitter voltage (saturated)	3071	Pulsed (see 4.5.1), I_C = 120 A dc, I_B = 24 A dc	$V_{CE(sat)2}$		2.0	V dc
Forward-current transfer ratio	3076	V_{CE} = 2 V dc, I_C = 20 A dc, pulsed (see 4.5.1)	h_{FE1}	30	120	
Forward-current transfer ratio	3076	V_{CE} = 2 V dc, I_C = 70 A dc, pulsed (see 4.5.1)	h_{FE2}	10	40	
Forward-current transfer ratio	3076	V_{CE} = 2 V dc, I_C = 40 A dc, pulsed (see 4.5.1)	h_{FE3}	15	50	
Subgroup 3						
High temperature operation:		T_C = +150°C				
Collector to emitter cutoff current	3041	Bias condition C, V_{CE} = 100 V dc, V_{BE} = 0 V dc	I_{CES2}		10	mA dc
Low temperature operation:		T_A = -65°C				
Forward-current transfer ratio	3076	V_{CE} = 2 V dc; I_C = 70 A dc, pulsed (see 4.5.1)	h_{FE4}	10		

See footnote at end of table.

TABLE I. Group A inspection - Continued.

Inspection	MIL-STD-750		Symbol	Limits		Unit
	Method	Conditions		Min	Max	
Subgroup 4						
Pulse response	3251	Test condition B, V_{CC} = 70 V dc, R_C = 1Ω, V_{BE1} = 8.5 V dc, R_b = 1Ω, V_{BE2} = 10 V dc				
Turn-on time			t_{on}		7.0	µs
Storage time			t_s		4.0	µs
Fall time			t_f		6.0	µs
Magnitude of common emitter small-signal short-circuit forward-current transfer ratio	3306	V_{CE} = 10 V dc, I_C = 5 A dc, f = 100 kHz	$\|h_{fe}\|$	5	20	
Subgroup 5						
Safe operating area (dc operation)	3051	T_C = 100°C, t = 1 s, 1 cycle, see figure 2				
Test 1		I_C = 50 A dc, V_{CE} = 4.0 V dc				
Test 2		I_C = 4 A dc, V_{CE} = 50 V dc				
Test 3		I_C = 850 mA dc, V_{CE} = 120 V dc				
Subgroups 6 and 7						
Not applicable						

1/ For sampling plan, see MIL-S-19500.

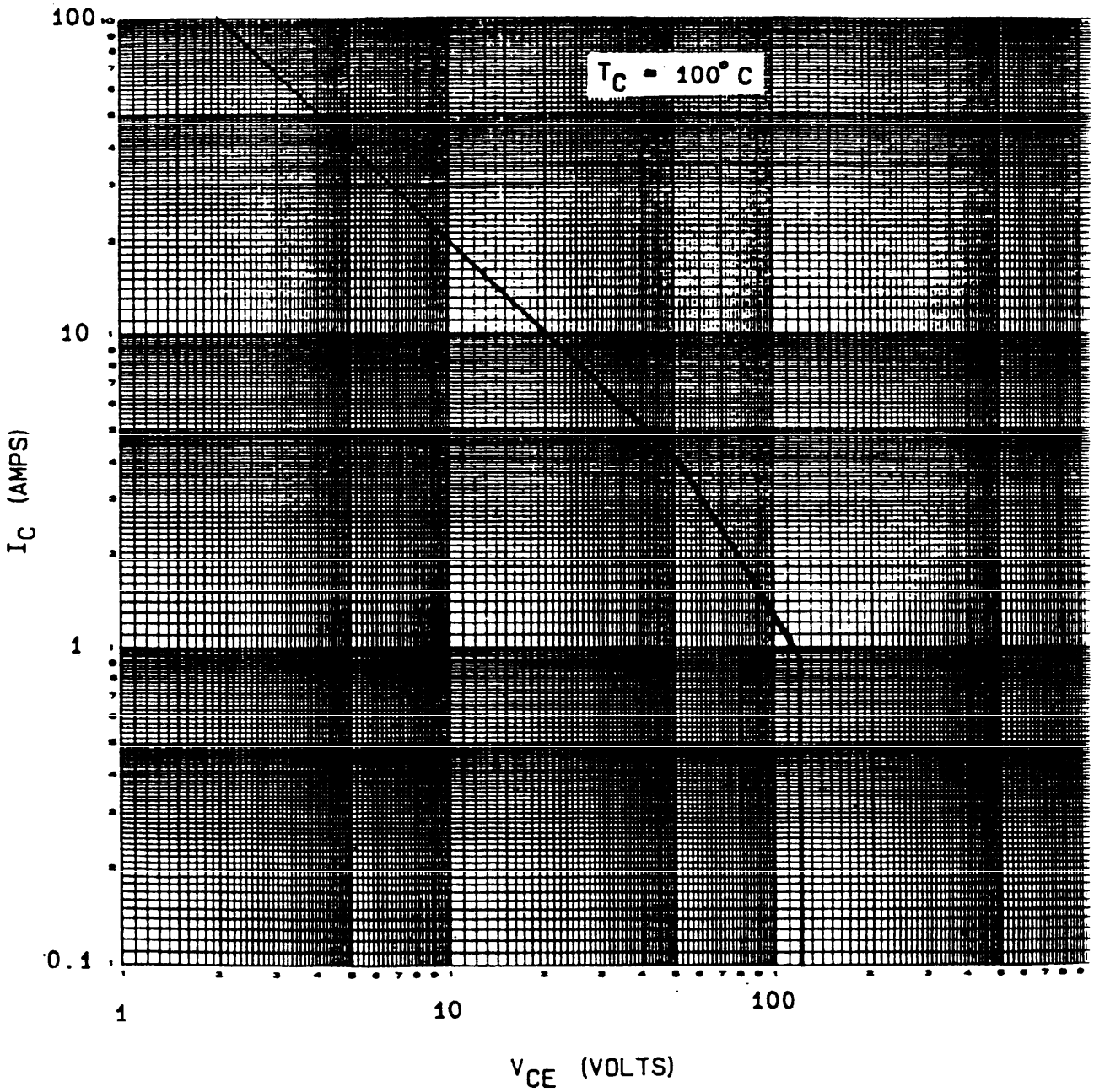

FIGURE 2. Maximum safe operating area graph (continuous dc).

TABLE II. Group B inspection for JANTX and JANTXV.

Inspection 1/	MIL-STD-750	
	Method	Conditions
Subgroup 1		
Solderability	2026	
Resistance to solvents	1022	
Subgroup 2		
Thermal shock (temperature cycling)	1051	Condition C
Hermetic seal	1071	
a. Fine leak b. Gross leak		
Electrical measurements		See table V, steps 1 and 2.
Subgroup 3		
Steady-state operation life	1027	T_A = 30°C ±5°C, $V_{CE} \geq$ 4.5 V dc, T_J = 187.5°C, ±12.5°C, 340 hours minimum.
Electrical measurements		See table V, steps 3 and 4
Subgroup 4		
Decap internal visual (design verification)	2075	
Bond strength	2037	Test condition A, all internal leads for each device shall be pulled separately.
Subgroup 5		
Thermal resistance	3101	$R_{\theta JC}$ = 0.5°C/W maximum, see 4.3.2
Subgroup 6		
High-temperature life (nonoperating)	1032	T_{STG} = +200°C
Electrical measurements		See table V, steps 3 and 4

See footnotes at end of table.

TABLE II. Group B inspection for JANTX and JANTXV - Continued.

Inspection 1/	MIL-STD-750	
	Method	Conditions
Subgroup 7		
Safe operating area (switching)	3053	Load condition C, unclamped inductive load, T_C = +25°C, single 10 ms pulse, $t_r = t_f \leq 1$ µs, R_{BB1} = 1Ω, R_{BB2} = ∞, V_{BB1} = 6.2 V dc, V_{BB2} = 0 V dc, I_C = 50 A dc, V_{CC} = 25 V dc, L = 5 mH.
Safe operating area 2/ (clamped switching destructive)	3053	Load condition B, T_A = 25°C, single 2 ms pulse, $t_r = t_f \leq 1$ µs, R_{BB1} = 1Ω, R_{BB2} = 20Ω, V_{BB1} = 8.5 V dc, V_{BB2} = 3 V dc, I_C = 70 A dc, V_{CLAMP} = 125 V dc, L = 68 µH, R_L = 0, Clamping diode-2N5926 (emitter-base shorted)
Electrical measurements		See table V, steps 1 and 2.

1/ For sampling plan, see MIL-S-19500.

2/ Device fails if clamp voltage is not reached.

TABLE III. Group C inspection (all quality levels).

Inspection 1/	MIL-STD-750	
	Method	Conditions
Subgroup 1		
Physical dimensions	2066	See figure 1.
Subgroup 2		
Thermal shock (glass strain)	1056	Condition B
Terminal strength (terminal torque)	2036	Condition D1; 6 inch-ounces, 15 seconds, base emitter only
Terminal strength (stud torque)	2036	Condition D2; 20 inch-pounds
Hermetic seal	1071	
a. Fine leak		
b. Gross leak		
Moisture resistance	1021	
Soldering heat	2031	One cycle
Electrical measurements		See table V, steps 1 and 2.
Subgroup 3		
Shock	2016	5 blows each orientation (X_1, Y_1, Y_2, and Z_1)
Vibration, variable frequency	2056	10 g's
Constant acceleration	2006	5,000 g's
Electrical measurements		See table V, steps 1 and 2.
Subgroup 4		
Salt atmosphere (corrosion)	1041	

See footnote at end of table.

TABLE III. Group C inspection (all quality levels) - Continued.

Inspection 1/	MIL-STD-750	
	Method	Conditions
Subgroup 5		
Not applicable		
Subgroup 6		
Steady-state operation life	1027	Continue from group B, subgroup 3 to 1,000 hours
Electrical measurements		See table V, steps 3 and 4.

1/ For sampling plan, see MIL-S-19500.

TABLE IV. Group E inspection (for qualification only).

Inspection	MIL-STD-750		Sampling plan
	Method	Conditions	
Subgroup 1			22 devices c = 0
Thermal shock temperature cycling	1051	250 cycles	
Electrical measurements		See table V, steps 1, 2, and 5.	
Subgroup 2			22 devices c = 0
Steady-state dc blocking life	1039 or 1049	Condition A, 340 hours.	
Electrical measurements		See table V, steps 3 and 4.	
Subgroup 3			
Destructive physical analysis	2101	Photos of cross sections shall be submitted in the qualification report. Vendors shall retain duplicate photos.	
Subgroup 4			10 devices c = 0
Thermal resistance	3101	$R_{\theta JC}$ = 0.5°C/W maximum, see 4.3.2	
Subgroup 5			
Not applicable			
Subgroup 6			
ESD	1020		10 devices c = 0

TABLE V. Electrical end-point measurements.

Step	Inspection	MIL-STD-750		Symbol	Limits		Unit
		Method	Conditions		Min	Max	
1	Collector to emitter cutoff current	3041	Bias condition A, V_{BE} = 0 V dc, V_{CE} = 150 V dc	I_{CES1}		2	mA dc
2	Forward-current transfer ratio	3076	V_{CE} = 2 V dc, I_C = 20 A dc, pulsed (see 4.5.1).	h_{FE1}	30	90	
3	Collector to emitter cutoff current	3041	Bias condition A, V_{BE} = 0 V dc, V_{CE} = 150 V dc	ΔI_{CES1}	100 percent of initial value or 200 µA dc, whichever is greater.		
4	Forward-current transfer ratio	3076	V_{CE} = 2 V dc, I_C = 20 A dc, pulsed (see 4.5.1).	Δh_{FE1}	±25 percent change in initial recorded value.		

4.4.3 Group C inspection. Group C inspection shall be conducted in accordance with the conditions specified for subgroup testing in table V of MIL-S-19500, and table III herein. Electrical measurements (end-points) and delta requirements shall be in accordance with the applicable steps of table V herein.

4.5 Methods of inspection. Methods of inspection shall be as specified in the appropriate tables and as follows.

4.5.1 Pulse measurements. Conditions for pulse measurement shall be as specified in section 4 of MIL-STD-750.

5. PACKAGING

5.1 Packaging requirements. The requirements for packaging shall be in accordance with MIL-S-19500.

6. NOTES

(This section contains information of a general or explanatory nature that may be helpful, but is not mandatory.)

6.1 Notes. The notes specified in MIL-S-19500 are applicable to this specification.

6.2 Acquisition requirements. Acquisition documents must specify the following:

a. Title, number, and date of this specification.

b. Issue of DODISS to be cited in the solicitation, and if required, the specific issue of individual documents referenced herein (see 2.1).

c. Lead material and finish may be specified (see 3.3.1).

6.3 Substitution information. Devices covered by this specification are substitutable for the manufacturer's and user's PIN's. This information in no way implies that manufacturer's part or identifying numbers are suitable as substitutes for the PIN's.

6.4 Changes from previous issue. Marginal notations are not used in this revision to identify changes with respect to the previous issue due to the extensiveness of the changes.

CONCLUDING MATERIAL

Custodian:
Army - ER

Review activity:
DLA - ES

Preparing activity:
Army - ER

Agent:
DLA - ES

(Project 5961-A007)