INCH-POUND

MIL-S-19500/447A(ER)
10 June 1991
SUPERSEDING
MIL-S-19500/447(ER)
19 February 1971

MILITARY SPECIFICATION

SEMICONDUCTOR DEVICE, TRANSISTOR, NPN, SILICON, POWER, TYPE 2N5926, JANTX AND JANTXV

This specification is approved for use by the Department of the Army and is available for use by all Departments and Agencies of the Department of Defense.

1. SCOPE

1.1 Scope. This specification covers the detail requirements for NPN, silicon, power transistor. Two levels of product assurance are provided for each device type as specified in MIL-S-19500.

1.2 Physical dimensions. See figure 1.

1.3 Maximum ratings. $R_{\theta JC}$ = 0.5°C/W.

P_T								
T_C = +25°C 1/	T_C = +100°C 1/	V_{CBO}	V_{CEO}	V_{EBO}	I_B	I_C 2/	T_{STG} and T_{OP}	T_J
W	W	V dc	V dc	V dc	A dc	A dc	°C	°C
350	200	150	120	10	20	50	-65 to +200	+200

1/ Between T_C = +25°C and T_C = +200°C, linear derating factor (average) = 2.0 W/°C.
2/ Pulsed (see 4.5.1) = 90 A.

Beneficial comments (recommendations, additions, deletions) and any pertinent data which may be of use in improving this document should be addressed to: Commander, US Army Laboratory Command, Reliability, Logistics and Standardization Division, ATTN: SLCET-R-S, Fort Monmouth, NJ 07703-5000, by using the self-addressed Standardization Document Improvement Proposal (DD Form 1426) appearing at the end of this document or by letter.

AMSC N/A
FSC 5961
DISTRIBUTION STATEMENT A. Approved for public release; distribution is unlimited.

1.4 Primary electrical characteristics.

h_{FE} 1/						V_{BE} 1/				$V_{CE(sat)}$ 1/			
I_C = 90 A dc V_{CE} = 4 V dc		I_C = 50 A dc V_{CE} = 2 V dc		I_C = 20 A dc V_{CE} = 2 V dc		I_C = 90 A dc V_{CE} = 4 V dc		I_C = 50 A dc V_{CE} = 2 V dc		I_C = 90 A dc I_B = 18 A dc		I_C = 50 A dc I_B = 5 A dc	
Min	Max	Min	Max	Min	Max	Min	Max	Min	Max	Min	Max	Min	Max
5.0	---	10	40	20	80	---	2.5	---	1.2	---	1.5 V dc	---	0.6 V dc

1/ Pulsed (see 4.5.1).

Limits	$\|h_{fe}\|$ V_{CE} = 10 V dc I_C = 5 A dc f = 100 kHz	t_{on}	t_s	t_f
		I_C = 50 A dc		
Min	5	---	---	---
Max	20	7.0 µs	4.0 µs	6.0 µs

2. APPLICABLE DOCUMENTS

2.1 Government documents.

2.1.1 Specifications, standards, and handbooks. The following specifications, standards, and handbooks form a part of this document to the extent specified herein. Unless otherwise specified, the issues of these documents are those listed in the issue of the Department of Defense Index of Specifications and Standards (DODISS) and supplement thereto, cited in the solicitation (see 6.2).

SPECIFICATION

MILITARY

MIL-S-19500 - Semiconductor Devices, General Specification for.

STANDARD

MILITARY

MIL-STD-750 - Test Methods for Semiconductor Devices.

(Unless otherwise indicated, copies of federal and military specifications, standards, and handbooks are available from the Standardization Documents Order Desk, Building 4D, 700 Robbins Avenue, Philadelphia, PA 19111-5094.)

2.2 Order of precedence. In the event of a conflict between the text of this document and the references cited herein, the text of this document takes precedence. Nothing in this document, however, supersedes applicable laws and regulations unless a specific exemption has been obtained.

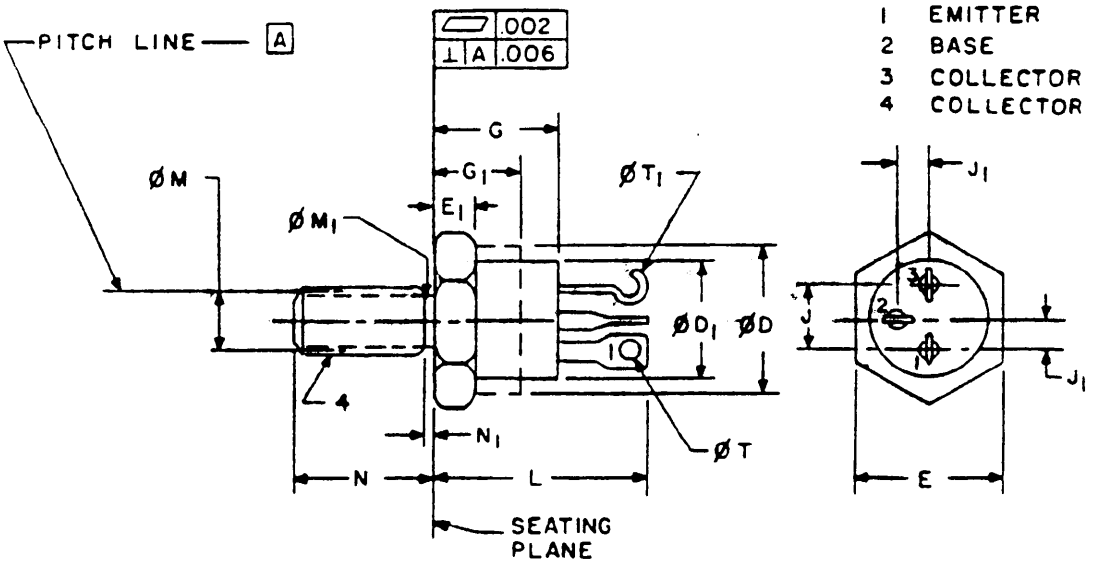

Symbol	Dimensions				Notes
	Inches		Millimeters		
	Min	Max	Min	Max	
ØD	.775	.875	19.69	22.22	2
$ØD_1$	.745	.775	18.93	19.68	
E	.847	.875	21.52	22.22	
E_1	.090	.167	2.29	4.24	1
G	.480	.535	12.20	13.58	
G_1		.300		7.62	2
J_1	.240	.260	6.10	6.60	5

Symbol	Dimensions				Notes
	Inches		Millimeters		
	Min	Max	Min	Max	
J	.485	.515	12.32	13.08	5
L	.937	1.030	23.80	26.16	
ØM					3
$ØM_1$	.278	.312	7.07	7.92	
N	.460	.495	11.69	12.57	
N_1		.105		2.66	6
ØT	.060	.105	1.53	2.66	
$ØT_1$	.060	.105	1.53	2.66	4

NOTES:
1. Chamfer or undercut on one or both ends of hexagonal portion is optional.
2. Package contour with the exception of the hexagon is optional within dimensions specified.
3. Pitch diameter 5/16-24 UNF-2A (coated) -.2854 (7.25 mm).
4. This terminal can be flattened and pierced or hook type.
5. Position of leads in relation to the hexagon is not controlled.
6. Length of incomplete or undercut threads of $ØM_1$.

FIGURE 1. Physical dimensions.

3. REQUIREMENTS

3.1 Detail specification. The individual item requirements shall be in accordance with MIL-S-19500, and as specified herein.

3.2 Abbreviations, symbols, and definitions. Abbreviations, symbols, and definitions used herein shall be as specified in MIL-S-19500.

3.3 Design, construction, and physical dimensions. The design, construction, and physical dimensions shall be as specified in MIL-S-19500, and figure 1 herein.

3.3.1 Lead material and finish. Lead material shall be Kovar or Alloy 52 and a copper core is permitted. Lead finish shall be gold or tin or solder. Where a choice of lead material or finish is desired, it shall be specified in the contract or purchase order (see 6.2).

3.4 Marking. Marking shall be in accordance with MIL-S-19500, except at the option of the manufacturer, the following marking may be omitted from the body of the device:

a. Country of origin.

b. Manufacturer's identification.

4. QUALITY ASSURANCE PROVISIONS

4.1 Sampling and inspection. Sampling and inspection shall be in accordance with MIL-S-19500, and as specified herein.

4.1.1 Inspection lot. Applicable to the semiconductor device(s) covered herein, the term 'inspection lot' shall be as defined in 4.3.1 of MIL-S-19500, except that the 6-week-period time limitation stipulated therein shall be considered as not compulsory.

4.2 Qualification inspection. Qualification inspection shall be in accordance with MIL-S-19500, and as specified herein.

4.2.1 Group E inspection. Group E inspection shall be conducted in accordance with MIL-S-19500 and table IV herein.

4.3 Screening (JANTX and JANTXV levels only). Screening shall be in accordance with MIL-S-19500 (table II), and as specified herein. The following measurements shall be made in accordance with table I herein. Devices that exceed the limits of table I herein shall not be acceptable.

Screen (see table II of MIL-S-19500)	Measurement
	JANTX and JANTXV levels
4	5,000 g's
9	Not applicable
11	I_{CES1} and h_{FE1}
12	Burn-in (see 4.3.1)
13	ΔI_{CES1} = 100 percent of initial value or 200 µA dc; whichever is greater Δh_{FE1} = ±25 percent; subgroup 2, table I herein

TABLE I. Electrical characteristics

4.3.1 Power burn-in conditions. Power burn-in conditions are in accordance with MIL-STD-750, method 1039, test condition B and as follows:

$T_A = +30°C \pm 5°C$.

$V_{CE} \geq 4.5$ V dc.

$T_J = 187.5°C \pm 12.5°C$.

NOTE: No heat sink or forced air cooling on the devices shall be permitted.

4.3.2 Thermal resistance. Thermal resistance measurements shall be conducted in accordance with method 3131 of MIL-STD-750. The following details shall apply:

a.	I_M measurement	10 mA
b.	V_{CE} measurement voltage	25 V
c.	I_H collector heating current	10 A
d.	V_H collector-emitter heating voltage	20 V
e.	t_H heating time	Steady-state (see MIL-STD-750, method 2131 for definition)
f.	t_{MD} measurement delay time	20 µs maximum
g.	t_{SW} sample window time	10 µs maximum

4.4 Quality conformance inspection. Quality conformance inspection shall be in accordance with MIL-S-19500 and as specified herein.

4.4.1 Group A inspection. Group A inspection shall be conducted in accordance with MIL-S-19500 and table I herein.

4.4.2 Group B inspection. Group B inspection shall be conducted in accordance with the conditions specified for subgroup testing in table IVb (JAN and JANTX) of MIL-S-19500, and table IV herein. Electrical measurements (end points) and delta requirements shall be in accordance with the applicable steps of table V herein.

4.4.3 Group C inspection. Group C inspection shall be conducted in accordance with the conditions specified for subgroup testing in table V of MIL-S-19500 and table III herein. Electrical measurements (end points) and delta requirements shall be in accordance with the applicable steps of table V herein.

TABLE I. Group A inspection.

Inspection 1/	MIL-STD-750		Symbol	Limits		Unit
	Method	Conditions		Min	Max	
Subgroup 1						
Visual and mechanical inspection	2071					
Subgroup 2						
Breakdown voltage, collector to emitter	3011	Bias condition D pulsed (see 4.5.1) I_C = 200 mA dc	$V_{(BR)CEO}$	120		V dc
Collector-emitter cutoff current	3041	Bias condition C V_{BE} = 0 V dc V_{CE} = 150 V dc	I_{CES1}		2	mA dc
Emitter to base current	3061	Bias condition D V_{EB} = 10 V dc	I_{EBO}		1	mA dc
Base emitter voltage	3066	Test condition B pulsed (see 4.5.1) I_C = 50 A dc V_{CE} = 2 V dc	V_{BE1}		1.2	V dc
Base emitter voltage	3066	Test condition B pulsed (see 4.5.1) I_C = 90 A dc V_{CE} = 4.0 V dc	V_{BE2}		2.5	V dc
Collector to emitter voltage (saturated)	3071	I_C = 50 A dc pulsed (see 4.5.1) I_B = 5 A dc	$V_{CE(sat)1}$		0.6	V dc
Collector to emitter voltage (saturated)	3071	Pulsed (see 4.5.1) I_C = 90 A dc I_B = 18 A dc	$V_{CE(sat)2}$		1.5	V dc
Forward-current transfer ratio	3076	V_{CE} = 2 V dc I_C = 20 A dc pulsed (see 4.5.1)	h_{FE1}	20	80	
Forward-current transfer ratio	3076	V_{CE} = 4 V dc I_C = 90 A dc pulsed (see 4.5.1)	h_{FE2}	5		
Forward-current transfer ratio	3076	V_{CE} = 2 V dc I_C = 50 A dc pulsed (see 4.5.1)	h_{FE3}	10	40	

See footnote at end of table.

TABLE I. Group A inspection - Continued.

Inspection 1/	MIL-STD-750		Symbol	Limits		Unit
	Method	Conditions		Min	Max	
Subgroup 3						
High temperature operation:		T_C = +150°C				
Collector to emitter cutoff current	3041	Bias condition C V_{CE} = 100 V dc V_{BE} = 0 V dc	I_{CES2}		10	mA dc
Low temperature operation:		T_A = -65°C				
Forward current transfer ratio	3076	V_{CE} = 2 V dc I_C = 50 A dc pulsed (see 4.5.1)	h_{FE4}	10		
Subgroup 4						
Pulse response transfer ratio	3251	Test condition B V_{CC} = 50 V dc R_c = 1Ω, V_{BE1} = 11.2 V dc R_b = 2Ω, V_{BE2} = 10 V dc				
Turn-on time			t_{on}		7.0	µs
Storage time			t_s		4.0	µs
Fall time			t_f		6.0	µs
Magnitude of common emitter small-signal short-circuit forward-current transfer ratio	3306	V_{CE} = 10 V dc I_C = 5 A dc f = 100 kHz	$\|h_{fe}\|$	5	20	

See footnote at end of table.

TABLE I. Group A inspection - Continued.

Inspection 1/	MIL-STD-750		Symbol	Limits		Unit
	Method	Conditions		Min	Max	
Subgroup 5						
Safe operating area (dc operation)	3051	T_C = 100°C t = 1 s, 1 cycle see figure 2				
Test 1		I_C = 50 A dc V_{CE} = 4.0 V dc				
Test 2		I_C = 4 A dc V_{CE} = 50 V dc				
Test 3		I_C = 850 mA dc V_{CE} = 120 V dc				
Subgroups 6 and 7						
Not applicable						

1/ For sample plan, see MIL-S-19500.

TABLE II. Group B inspection for JANTX and JANTXV.

Inspection 1/	MIL-STD-750	
	Method	Conditions
Subgroup 1		
Solderability	2026	
Resistance to solvents	1022	
Subgroup 2		
Temperature cycling	1051	Condition C
Hermetic seal	1071	
a. Fine leak		
b. Gross leak		
Electrical measurements		See table V, steps 1 and 2
Subgroup 3		
Steady-state operation life	1027	T_A = +30°C ±5°C; V_{CE} = 4.5 V dc; T_J = 187.5°C ±12.5°C; 340 hours
Electrical measurements		See table V, steps 3 and 4
Subgroup 4		
Decap internal visual (design verification)	2075	
Bond strength	2037	Test condition A all internal leads for each device shall be pulled separately.
Subgroup 5		
Thermal resistance	3131	See 4.3.2, $R_{\theta JC}$ = 0.5°C/W maximum
Subgroup 6		
High-temperature life (nonoperating)	1032	T_{STG} = +200°C
Electrical measurements		See table V, steps 3 and 4

See footnotes at end of table.

TABLE II. Group B inspection for JANTX and JANTXV - Continued.

Inspection 1/	MIL-STD-750	
	Method	Conditions
Subgroup 7		
Safe operating area (switching)	3053	Load condition C, (unclamped inductive load), T_C = +25°C, single 10 ms pulse, $t_r = t_f \leq 1$ µs, R_{BB1} = 1Ω, R_{BB2} = 00, V_{BB1} = 6.2 V dc, V_{BB2} = 0 V dc, I_C = 50 A dc, V_{CC} = 25 V dc, L = 5 mH
Safe operating area (clamped switching destructive) 2/	3053	Load condition B, T_A = +25°C, single 2 ms pulse, $t_r = t_f < 1$ µs, R_{BB1} = 1Ω, R_{BB2} = 20Ω, V_{BB1} = 6.2 V dc, V_{BB2} = 3 V dc, I_C = 50 A dc, V_{CLAMP} = 125 V dc, L = 68 µH, R_L = 0, Clamping diode -2N5926 (emitter-base shorted)
Electrical measurements		See table V, steps 1 and 2

1/ For sample plan, see MIL-S-19500.

2/ Device fails if clamp voltage is not reached.

TABLE III. Group C inspection (all quality levels).

Inspection 1/	MIL-STD-750	
	Method	Conditions
Subgroup 1		
Physical dimensions	2066	See figure 1
Subgroup 2		
Thermal shock (glass strain)	1056	Condition B
Terminal strength (terminal torque)	2036	Condition D1; 6 in-oz, 15 sec, base and emitter only
Terminal strength (stud torque)	2036	Condition D2; 20 inch-lbs
Hermetic seal	1071	
a. Fine leak		
b. Gross leak		
Moisture resistance	1021	
Soldering heat	2031	One cycle
Electrical measurements		See table V, steps 1 and 2
Subgroup 3		
Shock	2016	5 blows each orientation (X1, Y1, Y2, Z1)
Vibration, variable frequency	2056	10 g's
Constant acceleration	2006	5,000 g's
Electrical measurements		See table V, steps 1 and 2
Subgroup 4		
Salt atmosphere (corrosion)	1041	
Subgroup 5		
Not applicable		
Subgroup 6		
Steady-state operation life	1027	Continue from group B, subgroup 3 to 1,000 hours
Electrical measurements		See table V, steps 3 and 4

1/ For sample plan, see MIL-S-19500.

TABLE IV. Group E inspection (all quality levels) for qualification only.

Inspection	MIL-STD-750		Sampling plan
	Method	Conditions	
Subgroup 1			22 devices, c = 0
Temperature cycling	1051	250 cycles	
Electrical measurements		See table V, steps 1 and 2	
Subgroup 2			22 devices, c = 0
Steady-state dc blocking life	1039 or 1049	Condition A, 340 hours	
Electrical measurements		See table V, steps 3 and 4	
Subgroup 3			
Destructive physical analysis	2102	Photos of cross sections shall be submitted in the qualifications report. Vendors shall retain duplicate photos.	
Subgroup 4			10 devices, c = 0
Thermal resistance	3131	$R_{\theta JC}$ = 0.5°C/W maximum see 4.3.2	
Subgroup 5			
Not applicable			
Subgroup 6			10 devices, c = 0
ESD	1020		

TABLE V. Electrical end-point measurements.

Step	Inspection	MIL-STD-750		Symbol	Limits		Unit
		Method	Conditions		Min	Max	
1.	Collector to emitter cutoff current	3041	Bias condition A V_{BE} = 0 V dc V_{CE} = 150 V dc	I_{CES1}		2	mA dc
2.	Forward-current transfer ratio	3076	V_{CE} = 2 V dc I_C = 20 A dc pulsed (see 4.5.1)	h_{FE1}	20	80	
3.	Collector to emitter cutoff current	3041	Bias condition A V_{BE} = 0 V dc V_{CE} = 150 V dc	ΔI_{CES1}	100 percent of initial value or 200 μA dc whichever is greater		
4.	Forward-current transfer ratio	3076	V_{CE} = 2 V dc I_C = 20 A dc pulsed (see 4.5.1)	Δh_{FE1}	±25 percent change in initial recorded value		

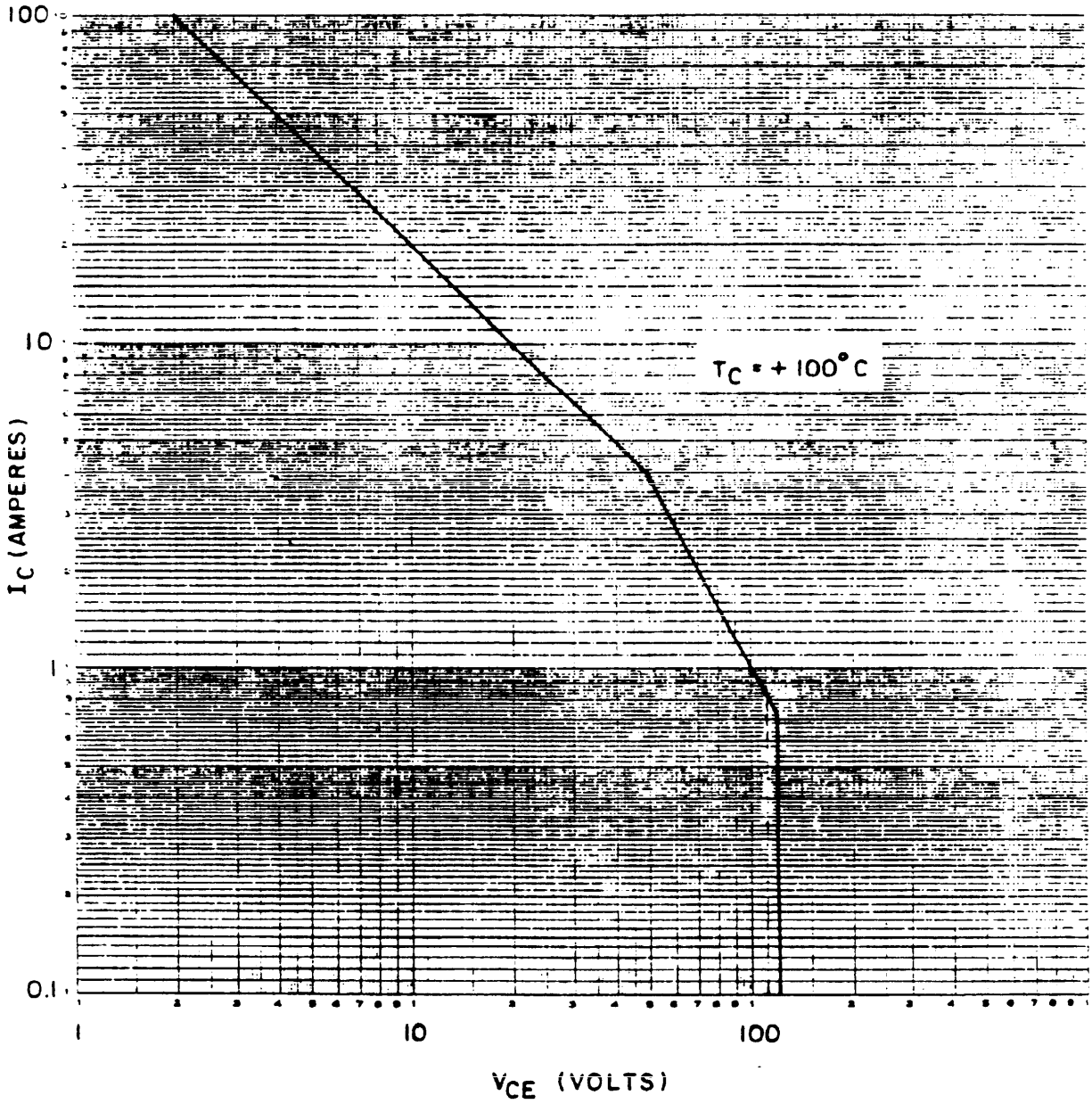

FIGURE 2. Maximum safe operating area graph (continuous dc).

4.5 Methods of inspection. Methods of inspection shall be as specified in the appropriate tables and as follows.

4.5.1 Pulse measurements. Conditions for pulse measurements shall be as specified in section 4 of MIL-STD-750.

5. PACKAGING

5.1 Packaging requirements. The requirements for packaging shall be in accordance with MIL-S-19500.

6. NOTES

(This section contains information of a general or explanatory nature that may be helpful, but is not mandatory.)

6.1 Notes. The notes specified in MIL-S-19500 are applicable to this specification.

6.2 Acquisition requirements. Acquisition documents must specify the following:

a. Title, number, and date of this specification.

b. Issue of DODISS to be cited in the solicitation, and if required, the specific issue of individual documents referenced (see 2.1).

c. Lead material and finish (see 3.3.1).

6.3 Substitution information. Devices covered by this specification are substitutable for the manufacturer's and user's Part or Identifying Number (PIN). This information in no way implies that manufacturer's PIN's are suitable as a substitute for the PIN.

6.4 Changes from previous issue. Asterisks are not used in this revision to identify changes with respect to the previous issue due to the extensiveness of the changes.

CONCLUDING MATERIAL

Custodian:
Army - ER

Review activity:
DLA - ES

Preparing activity:
Army - ER

Agent:
DLA - ES

(Project 5961-A006)