MILITARY SPECIFICATION

SEMICONDUCTOR DEVICE, TRANSISTOR, NPN, SILICON, POWER TYPES 2N6674, 2N6675, 2N6689, AND 2N6690 JAN, JANTX, AND JANTXV

This specification is approved for use by Rome Air Development Center, Department of the Air Force, and is available for use by all Departments and Agencies of the Department of Defense.

1. SCOPE

1.1 Scope. This specification covers the detail requirements for NPN, silicon, power transistors for use in high-speed power-switching applications. Three levels of product assurance are provided for each device type as specified in MIL-S-19500.

1.2 Physical dimensions. See figure 1 (TO-3) - 2N6674, 2N6675
See figure 2 (TO-61) - 2N6689, 2N6690

1.3 Maximum ratings.

Type	P_T 1/		V_{CBO} and V_{CEX}	V_{CEO}	V_{EBO}	I_B	I_C	T_{STG} and T_{op}
	T_A = +25°C	T_C = +25°C						
	W	W	Vdc	Vdc	Vdc	Adc	Adc	°C
2N6674	6	175	450	300	7	5	15	-65 to +200
2N6675	6	175	650	400	7	5	15	-65 to +200
2N6689	3	175	450	300	7	5	15	-65 to +200
2N6690	3	175	650	400	7	5	15	-65 to +200

1/ Derate linearly 1.0 W/°C for T_C > 25°C
Derate linearly 34.2 mW/°C for T_A > 25°C - 2N6674, 2N6675
Derate linearly 17.1 mW/°C for T_A > 25°C - 2N6689, 2N6690

Beneficial comments (recommendations, additions, deletions) and any pertinent data which may be of use in improving this document should be addressed to: Rome Air Development Center, (RBE-2), Griffiss AFB, NY 13441 by using the self-addressed Standardization Document Improvement Proposal (DD Form 1426) appearing at the end of this document or by letter.

1.4 Primary electrical characteristics at T_C = +25°C.

Limit	$R_{\theta JC}$	$V_{BE(sat)}$ I_C = 10 Adc I_B = 2 Adc	$V_{CE(sat)}$ I_C = 10 Adc I_B = 2 Adc	C_{obo} V_{CB} = 10 Vdc I_E = 0 100 kHz < f < 1 MHz	$\|h_{fe}\|$ V_{CE} = 10 Vdc I_C = 1 Adc f = 5 MHz
	°C/W	Vdc	Vdc	pF	
Min	---	---	---	150	3
Max	1.0	1.5	1.0	500	10

Limit	h_{FE1} V_{CE} = 3 Vdc I_C = 1 Adc 1/	h_{FE2} V_{CE} = 2 Vdc I_C = 10 Adc 1/	Switching parameters				
			t_d	t_r	t_s	t_f	t_c
Min	15	8	µs --	µs --	µs --	µs --	µs --
Max	40	20	0.1	0.6	2.5	0.5	0.5

1/ Pulsed (see 4.5.1).

2. APPLICABLE DOCUMENTS.

2.1 Issues of documents. The following documents of the issue in effect on date of invitation for bids or request for proposal, form a part of this specification to the extent specified herein.

SPECIFICATION

MILITARY

MIL-S-19500 - Semiconductor Devices, General Specification for.

STANDARDS

MILITARY

MIL-STD-750 - Test Methods for Semiconductor Devices.

(Copies of specifications, standards, drawings, and publications required by contractors in connection with specific procurement functions should be obtained from the procuring activity or as directed by the contracting officer).

3. REQUIREMENTS

3.1 Detail specification. The individual item requirements shall be in accordance with MIL-S-19500, and as specified herein.

3.2 Abbreviations, symbols, and definitions. The abbreviations, symbols, and definitions used herein are defined in MIL-S-19500 and as follows:

R_{ISO} --- resistance offered by an insulating material to an impressed direct voltages tending to produce a leakage of current through or on the surface of the material.

T_c = t_{off} cross overtime. The time interval during which the collector voltage rises from 10 percent of its peak off-state value and the collector current falls to 10 percent of its peak on-state value (see figure 3).

3.3 Design, construction, and physical dimensions. The design, construction, and physical dimensions shall be as specified in MIL-S-19500 and figures 1 and 2 herein. Current density of internal conductors shall be as specified in MIL-S-19500. No aluminum cases shall be permitted.

3.3.1 Lead material and finish. Lead material shall be Kovar or Alloy 52. Lead finish shall be gold plated, tin plated, or solder dipped. Where a choice of lead material or finish is desired, it shall be specified in the contract (see 6.2).

3.4 Marking. Devices shall be marked in accordance with MIL-S-19500. At the option of the manufacturer, the marking of the country of origin may be omitted from the body of the transistor.

4. QUALITY ASSURANCE PROVISIONS.

4.1 Sampling and inspection. Sampling and inspection shall be in accordance with MIL-S-19500, and as specified herein.

4.2 Screening (JANTX and JANTXV levels only). Screening shall be in accordance with MIL-S-19500 (table II) and as specified herein. The following measurements shall be made in accordance with table I herein. Devices that exceed the limits of table I herein shall not be acceptable.

Screen (see table II of MIL-S-19500)	Measurement JANTX and JANTXV levels
9	I_{CEX1}
11	I_{CEX1} and h_{FE2}; ΔI_{CEX1} = 100% of initial value or 50 µAdc, whichever is greater.
12	See 4.2.1
13a	Subgroup 2 of table I herein; ΔI_{CEX1} = 100% of initial value or 50 µAdc, whichever is greater; h_{FE2} = ±20% of initial value
13b	Isolation resistance test - See 4.2.2 (Types 2N6689, 2N6690 only).

4.2.1 Power burn-in conditions. Power burn-in conditions are as follows:

T_J = +187.5° ±12.5°C; V_{CB} = 100 Vdc; $T_A \leq 100°C$

4.2.2 Isolation resistance test. Isolation resistance test conditions are as follows: MIL-STD-750, method 1016, test condition B, short collector, emitter and base terminals together. Limit is 10^9 ohms minimum.

4.3 Qualification inspection. Qualification inspection shall be in accordance with MIL-S-19500.

4.4 Quality conformance inspection. Quality conformance inspection shall be in accordance with MIL-S-19500.

4.4.1 Group A inspection. Group A inspection shall be conducted in accordance with the conditions specified for subgroup testing table IV - (JAN, JANTX, and JANTXV) of MIL-S-19500 and table I herein. Electrical measurements (end points) and delta requirements shall be in accordance with the applicable steps of table IV herein.

4.4.2 Group B inspection. Group B inspection shall be conducted in accordance with the conditions specified for subgroup testing table IVb - (JAN, JANTX, and JANTXV) of MIL-S-19500 and table II herein. Electrical measurements (end points) and delta requirement shall be in accordance with the applicable steps of table IV herein.

4.4.3 Group C inspection. Group C inspection shall be conducted in accordance with the conditions specified for subgroup testing in table V of MIL-S-19500 and table II herein. Electrical measurement (end points) and delta requirements shall be in accordance with the applicable steps of table IV herein.

4.5 Methods of inspection. Methods of inspection shall be as specified in the appropriate tables and as follows.

4.5.1 Pulse measurement. Conditions for pulse measurement shall be as specified in section 4 of MIL-STD-750.

4.5.2 Thermal resistance. Thermal resistance measurements shall be conducted in accordance with method 3131 of MIL-STD-750. The following conditions apply:

a. Collector current magnitude during power applications shall be 2.5 Adc.
b. Collector to emitter voltage magnitude shall be 20 Vdc.
c. Reference temperature measuring point shall be the case.
d. Reference point temperature shall be 25° to 75°C.
e. Mounting arrangement shall be with heat sink to case.
f. Maximum limit of $R_{\theta JC}$ shall be 1.0°C/W.

4.5.3 Group C life test. If the option of "T_C" life test is conducted in group B inspection, the test sample may be continued as subgroup 6 of group C inspection in accordance with MIL-S-19500 and table III herein.

4.5.4 Inspection conditions. Unless otherwise specified in MIL-S-19500 or herein, all inspections shall be conducted at a case temperature (T_C) of 25° ±3°C.

5. PACKAGING.

5.1 Packaging requirements. The requirements of packaging shall be in accordance with MIL-S-19500.

6. NOTES

6.1 Notes. The notes specified in MIL-S-19500 are applicable to this specification.

6.2 Ordering data. Procurement documents should specify the following:

a. Lead material and finish (see 3.3.1).

Custodian:
Air Force - 17

Review activities:
Air Force - 11, 19, 85, 99
DLA - ES

Preparing activity:
Air Force - 17

Agent:
DLA - ES

(Project 5961-F778)

TABLE I. Group A inspection.

Inspection	MIL-STD-750 Method	MIL-STD-750 Details	LTPD JAN TX TXV	Symbol	Limits Min	Limits Max	Unit
Subgroup 1			5				
Visual and mechanical examination	2071						
Subgroup 2			5				
Breakdown voltage, collector to emitter	3011	Bias condition D; I_C = 200 mAdc pulsed (see 4.5.1)		$V_{(BR)CEO}$			
2N6674, 2N6689					300	---	Vdc
2N6675, 2N6690					400	---	Vdc
Collector to emitter cutoff current	3041	Bias condition D; V_{BE} = -1.5 Vdc		I_{CEX1}			
2N6674, 2N6689		V_{CE} = 450 Vdc			---	0.1	mAdc
2N6675, 2N6690		V_{CE} = 650 Vdc			---	0.1	mAdc
Collector to base, cutoff current	3036	Bias condition D;		I_{CBO}			
2N6674, 2N6689		V_{CB} = 450 Vdc			---	1.0	mAdc
2N6675, 2N6690		V_{CB} = 650 Vdc			---	1.0	mAdc
Emitter to base cutoff current	3061	Bias condition D; V_{EB} = 7 Vdc		I_{EBO}	---	2.0	mAdc
Base emitter voltage (saturated)	3066	Test condition A; I_C = 10 Adc; I_B = 2 Adc; pulsed (see 4.5.1)		$V_{BE(sat)}$	---	1.5	Vdc
Collector to emitter voltage (saturated)	3071	I_C = 10 Adc; I_B = 2 Adc; pulsed (see 4.5.1)		$V_{CE(sat)1}$	---	1.0	Vdc
Collector to emitter voltage (saturated)	3071	I_C = 15 Adc; I_B = 5 Adc; pulsed (see 4.5.1)		$V_{CE(sat)2}$	---	5.0	Vdc
Forward-current transfer ratio	3076	V_{CE} = 3 Vdc; I_C = 1 Adc; pulsed (see 4.5.1)		h_{FE1}	15	40	---
Forward-current transfer ratio	3076	V_{CE} = 2 Vdc; pulsed (see 4.5.1) I_C = 10 Adc		h_{FE2}	8	20	---
Insulation resistance (2N6689 and 2N6690 only)	1016	See 4.2.2		R_{ISO}	$1x10^9$		ohms
Subgroup 3			7				
High-temperature operation:		T_A = +125°C					
Collector to emitter cutoff current	3041	Bias condition A; V_{BE} = -1.5 Vdc		I_{CEX2}			
2N6674, 2N6689		V_{CE} = 450 Vdc			---	1.0	mAdc
2N6675, 2N6690		V_{CE} = 650 Vdc			---	1.0	mAdc
Collector to emitter voltage (saturated)	3071	I_C = 10 Adc; I_B = 2 Adc; pulsed (see 4.5.1)		$V_{CE(sat)3}$		2.0	Vdc

TABLE I. Group A inspection - Continued.

Inspection	MIL-STD-750		LTPD JAN TX TXV	Symbol	Limits		Unit
	Method	Details			Min	Max	
Subgroup 3 - cont'd							
Switching parameters		T_A = +125°C					
Pulse delay time		See figure 3		t_d	---	0.1	µsec
Pulse rise time				t_r	---	1.0	µsec
Pulse storage time				t_s	---	4.0	µsec
Pulse fall time				t_f	---	1.0	µsec
Cross-over time				t_c	---	0.8	µsec
Low temperature operation:		T_A = -55°C					
Forward-current transfer ratio	3076	V_{CE} = 2 Vdc; pulsed (see 4.5.1); I_C = 10 Adc		h_{FE3}	4	---	---
Subgroup 4			7				
Small-signal short-circuit forward-current transfer ratio (magnitude h_{fe})	3306	V_{CE} = 10 Vdc; I_C = 1 Adc; f = 5 MHz		$\|h_{fe}\|$	3	10	---
Open circuit output capacitance	3236	V_{CB} = 10 Vdc; IE = 0, 100 kHz ≤ f ≤ 1 MHz		C_{obo}	150	500	pF
Switching parameters:							
Pulse delay time		See figure 3		t_d	---	0.1	µsec
Pulse rise time		See figure 3		t_r	---	0.6	µsec
Pulse storage time		See figure 3		t_s	---	2.5	µsec
Pulse fall time		See figure 3		t_f	---	0.5	µsec
Cross-over time		See figure 3		t_c	---	0.5	µsec
Subgroup 5			10				
Safe operating area (continuous dc)	3051	T_C = 25°C; power application time = 1 s, 1 cycle, (see figure 4)					
Test 1		V_{CE} = 11.7 Vdc;					
All types		I_C = 15 Adc					
Test 2		V_{CE} = 30 Vdc;					
2N6674, 2N6675		I_C = 5.9 Adc					
Test 3		V_{CE} = 100 Vdc;					
All types		I_C = 0.25 Adc					
Test 4		V_{CE} = 25 Vdc;					
2N6689, 2N6690		I_C = 7 Adc					

TABLE I. Group A inspection - Continued.

Inspection	MIL-STD-750		LTPD JAN TX TXV	Symbol	Limits		Unit
	Method	Details			Min	Max	
Subgroup 5 - cont'd							
Test 5		V_{CE} = 300 Vdc;					
2N6674, 2N6689		I_C = 20 mAdc					
2N6675, 2N6690		V_{CE} = 400 Vdc; I_C = 10 mAdc					
Safe operating area (clamped switching)		T_A = 25°C; V_{CC} = 15 Vdc (see figures 6 and 7)					
2N6674, 2N6689		clamp voltage = 350 Vdc; I_C = 10 Adc					
2N6675, 2N6690		clamp voltage = 450 Vdc; I_C = 10 Adc					
End point electrical measurements		See table IV, steps 1, 4 and 6					
Subgroups 6 and 7							
Not applicable							

TABLE II. Group B inspection.

Inspection	MIL-STD-750		LTPD
	Method	Conditions	
Subgroup 1			15
Solderability	2026		
Resistance to solvents	1022		
Subgroup 2			10
Thermal shock (temperature cycling)	1051		
Hermetic seal	1071		
a. Fine leak b. Gross leak			
Electrical measurements		See table IV, steps 1 and 3	
Subgroup 3			5
Steady-state operation life (LTPD)	1027	T_J = 187.5° ±12.5°C V_{CB} = 100 Vdc; T_A = 25°C	
Electrical measurements		See table IV, steps 1, 6, 7, and 8	
Subgroup 4			
Decap internal visual design verification	2075		1 device/ 0 failure for each lot
Bond strength	2037	Test condition A; all internal wires for each device shall be pulled separately	20 (c=o)
Subgroup 5			15
Thermal resistance	3131	See 4.5.3	
Subgroup 6			7
High-temperature life (nonoperating) (LTPD)	1032	T_A = 200°C	
Electrical measurements		See table IV, steps 1, 3, 6, and 8	

one having again been subdivided into:

TABLE II. Group B inspection - Continued.

Inspection	MIL-STD-750 Method	MIL-STD-750 Conditions	LTPD
Subgroup 7			7
Safe operating area (unclamped inductive)	3053	Load condition C; (unclamped inductive load) (See figure 5); T_A = 25°C; duty cycle ≤10%; R_S = 0.1 ohms; t_r = t_p ≤500 ns	
Test 1		t_p = 5 ms (vary to obtain I_C); R_{BB1} = 1 ohm; V_{BB1} = 10 Vdc; R_{BB2} = 50 ohms; V_{BB2} = -4 Vdc; V_{CC} = 20 Vdc; I_C = 15 Adc; L = 10 µH (approx. 10 turns, 1 row of #16 AWG wire on an air core 2-7/8" ID) .0007 ohms, or equivalent	
Test 2		t_p = 5 ms (vary to obtain I_C); R_{BB1} = 100 ohms; V_{BB1} = 10 Vdc; R_{BB2} = 50 ohms; V_{BB2} = -4 Vdc; V_{CC} = 20 Vdc; I_C = 100 mAdc; L = 1 mH	
		(1 ea. Miller type 7827 in parallel with 2 ea. series string Miller type 7825 and this in series with 2 ea. string Miller type 7827 .45 ohms or equivalent.	
Safe operating area (clamped switching) (destructive)		T_A = 25°C, V_{CC} = 135 Vdc (see figures 6 and 7)	
2N6674, 2N6689		Clamp voltage = 350 Vdc; I_C = 10 Adc	
2N6675, 2N6690		Clamp voltage = 450 Vdc; I_C = 10 Adc	
End point electrical measurements		See table IV, steps 1, 4, and 6.	

TABLE III. Group C inspection.

Inspection	MIL-STD-750		LTPD
	Method	Conditions	
Subgroup 1			15
Physical dimensions	2066	See figure 1 (TO-3) See figure 2 (TO-61)	
Subgroup 2			10
Thermal shock (glass strain)	1056	Test condition B	
Terminal strength (tension)	2036	Test condition A; weight = 10 lbs; time = 15 s	
(Terminal torque) 2N6689, 2N6690 only		Test condition D_1; Torque = 6 in-oz; Time = 15 s	
(Stud torque) 2N6689, 2N6690 only		Test condition D_2; torque = 15 in-lb time = 15 s	
Hermetic seal a. fine leak b. gross leak	1071		
Moisture resistance	1021		
External visual	2071		
Electrical measurements		See table IV, steps 1 and 7	
Subgroup 3			10
Shock	2016		
Vibration, variable frequency	2056		
Constant acceleration	2006		
Electrical measurements		See table IV, steps 1 and 7	
Subgroup 4			15
Salt atmosphere (corrosion)	1041		
Subgroup 5			
Not applicable			

TABLE III. Group C inspection - Continued.

Inspection	MIL-STD-750		LTPD
	Method	Conditions	
Subgroup 6			10
Steady-state operation life (LTPD)	1027	V_{CB} = 20 Vdc; P_T = 100 W at T_C = 100°C or +100°C $\leq T_C \leq$ 125°C with P_T varied according to the chosen T_C to achieve a T_J = 187.5° ±12.5°C (see 4.5.3 and 4.5.4)	
Electrical measurements		See table IV, steps 1, 2, 3, 5, 7, 8, and 9	

TABLE IV. Groups A, B, and C electrical measurements.

Steps	Inspection	MIL-STD-750		Symbol	Limits		Unit
		Method	Details		Min	Max	
1	Collector to emitter cutoff current	3041	Bias conditions A; V_{BE} = -1.5 Vdc	I_{CEX1}			
	2N6674, 2N6689		V_{CE} = 450 Vdc		---	0.1	mAdc
	2N6675, 2N6690		V_{CE} = 650 Vdc		---	0.1	mAdc
2	Collector to emitter voltage (saturated)	3071	I_C = 10 Adc; I_B = 2 Adc; pulsed (see 4.5.1)	$V_{CE(sat)1}$	---	1.0	Vdc
3	Base emitter voltage (saturated)	3066	Test condition A; I_C = 10 Adc; I_B = 2 Adc pulsed (see 4.5.1)	$V_{BE(sat)}$	---	1.5	Vdc
4	Breakdown voltage, collector to emitter	3011	Bias condition D; I_C = 200 mAdc; pulsed (see 4.5.1)	$V_{(BR)CEO}$			
	2N6674, 2N6689,				300	---	Vdc
	2N6675, 2N6690				400	---	Vdc
5	Forward current transfer ratio	3076	V_{CE} = 3 Vdc; I_C = 1 Adc; pulsed (see 4.5.1)	h_{FE1}	15	40	---
6	Forward current transfer ratio	3076	V_{CE} = 2 Vdc; I_C = 10 Adc pulsed (see 4.5.1)	h_{FE2}	8	20	---
7	Collector to emitter cutoff current	3041	Bias condition A; V_{BE} = -1.5 Vdc	ΔI_{CEX1} 1/		100% of initial value or 50 µAdc, whichever is greater.	
	2N6674, 2N6689		V_{CE} = 450 Vdc		---		
	2N6675, 2N6690		V_{CE} = 650 Vdc		---		
8	Forward current transfer ratio	3076	V_{CE} = 2 Vdc; I_C = 10 Adc pulsed (see 4.5.1)	Δh_{FE2} 1/	---	±25% change from previously measured value	
9	Collector to emitter voltage (saturated)	3071	I_C = 10 Adc; I_B = 2 Adc; pulsed (see 4.5.1)	$\Delta V_{CE(sat)}$ 1/		±100 mV change from previously measured value	

1/ Devices which exceed the group A limits for this test shall not be acceptable.

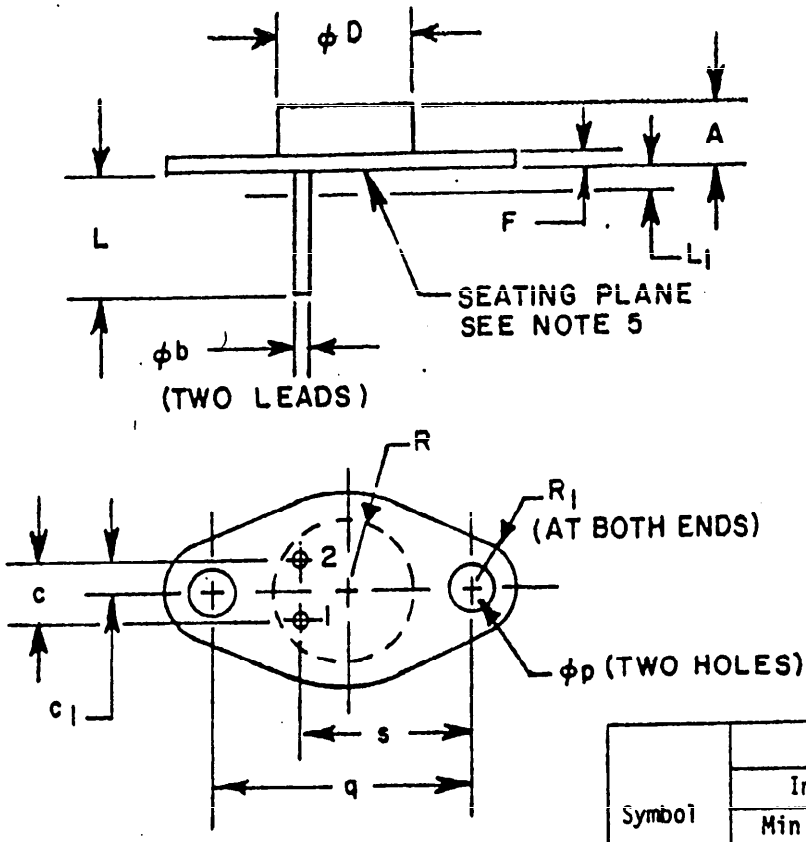

Symbol	Dimensions				Notes
	Inches		Millimeters		
	Min	Max	Min	Max	
A	.270	.380	6.86	9.65	
Øb	.038	.043	.97	1.09	
ØD	---	.875	---	22.22	
c	.420	.440	10.67	11.18	4,5
c_1	.205	.225	5.21	5.72	4,5
F	.060	.135	1.52	3.43	
L	.312	.500	7.92	12.70	
L_1	---	.050	---	1.27	
Øp	.151	.161	3.84	4.09	
q	1.177	1.197	29.90	30.40	
R	.495	.525	12.57	13.34	
R_1	.131	.188	3.33	4.78	
s	.655	.675	16.64	17.14	

NOTES:
1. Dimensions are in inches.
2. Metric equivalents are given for general information only and are based upon 1.00 inch = 25.4 mm.
3. Terminal 1, base; terminal 2, emitter; case, collector.
4. These dimensions should be measured at points .050-.055 (1.27-1.40 mm) below seating plane. When gage is not used, measurement will be made at the seating plane.
5. The seating plane of the header shall be flat within .001 (.03 mm) concave to .004 (.10 mm) convex inside a .930 (23.62 mm) diameter circle on the center of the header and flat within .001 (.03 mm) concave to .006 (.15 mm) convex overall.
6. Collector shall be electrically connected to the case.

FIGURE 1. Physical dimensions of transistor types 2N6674 and 2N6675.

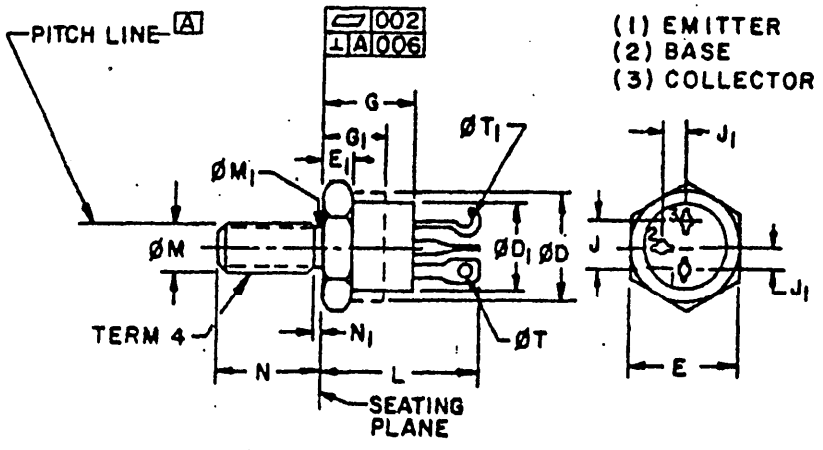

Symbol	Dimensions				Notes
	Inches		Millimeters		
	Min	Max	Min	Max	
ØD	.610	.687	15.49	17.45	2
$ØD_1$	.570	.610	14.48	15.49	
E	.667	.687	16.94	17.45	
E_1	.090	.150	2.29	3.81	1
G	.325	.460	8.26	11.68	
G_1	---	.270	---	6.86	2
J_1	.170	.213	4.32	5.41	5
J	.340	.415	8.64	10.54	5
L	.640	.875	16.26	22.22	
ØM	---	---	---	---	3
$ØM_1$	.220	.249	5.59	6.32	
N	.422	.455	10.72	11.56	
N_1	---	.090	---	2.29	6
ØT	.047	.072	1.19	1.83	
$ØT_1$	.046	.077	1.17	1.96	4

NOTES:
1. Chamfer or undercut on one or both ends of hexagonal portion is optional.
2. Package contour with the exception of the hexagon is optional with dimensions specified.
3. Pitch diameter 1/4-28 UNF-2A (coated) -.2268 (5.761 mm).
4. This terminal can be flattened and pierced or hook type.
5. Position of leads in relation to the hexagon is not controlled.
6. Length of incomplete or undercut threads of $ØM_1$.
7. All leads isolated from case.

FIGURE 2. Physical dimensions of transistor types 2N6689 and 2N6690 (TO-61).

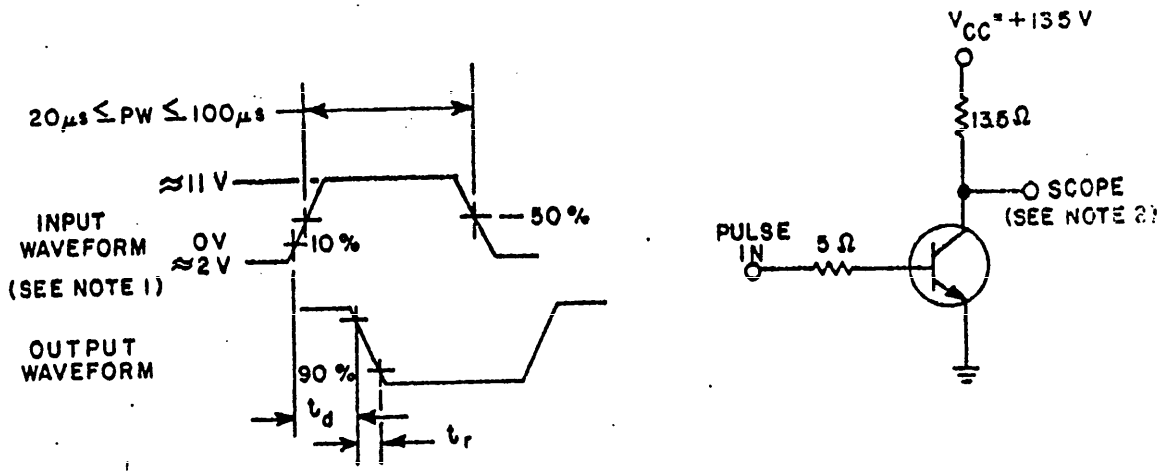

t_d AND t_r TIME TEST CIRCUIT

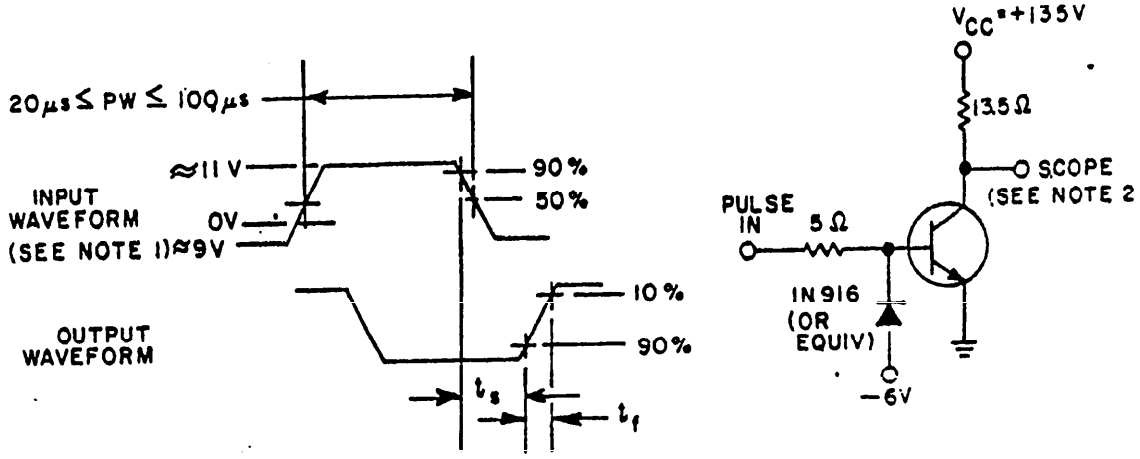

t_s AND t_f TIME TEST CIRCUIT

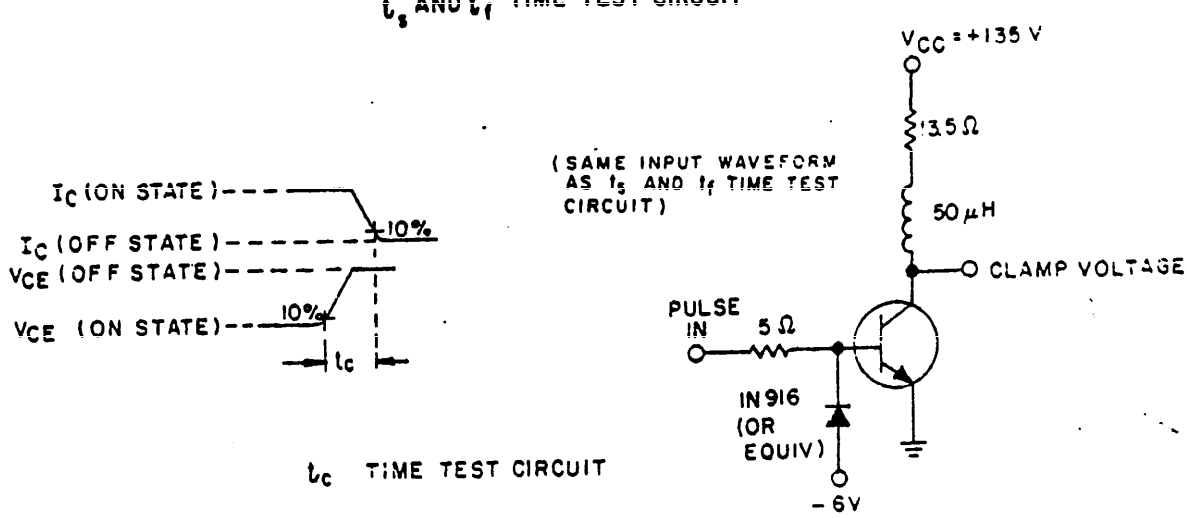

t_c TIME TEST CIRCUIT

NOTES:
1. The rise time (t_r) of the applied pulse shall be ≤ 20 ns; duty cycle ≤ 2%; generator source impedance shall be 50Ω.
2. Output sampling oscilloscope: Z_{in} = 10 kΩ; C_{in} = 12 pF; rise time ≤ 20 ns.

FIGURE 3. Pulse response test circuits.

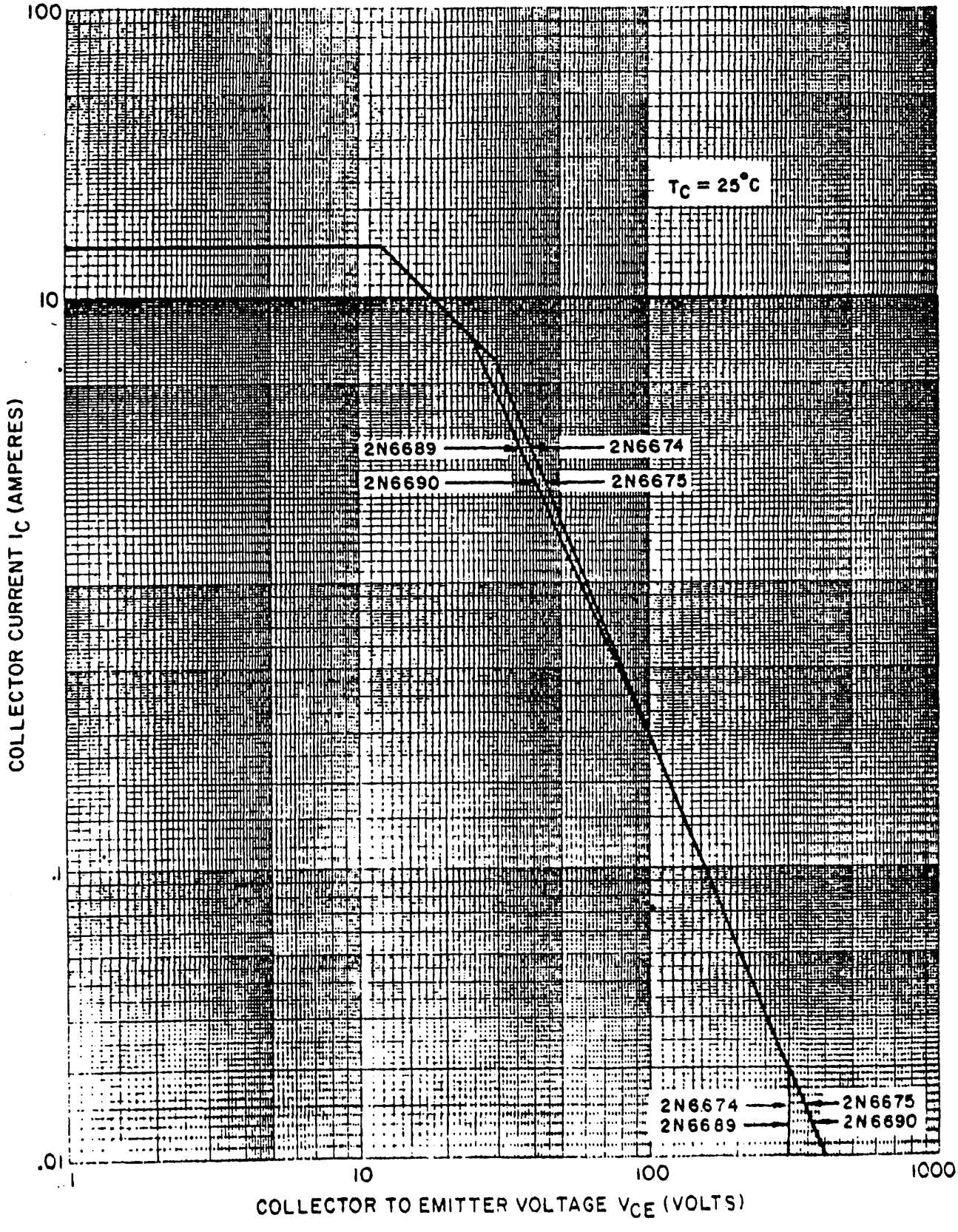

FIGURE 4. Maximum safe operating graph (DC).

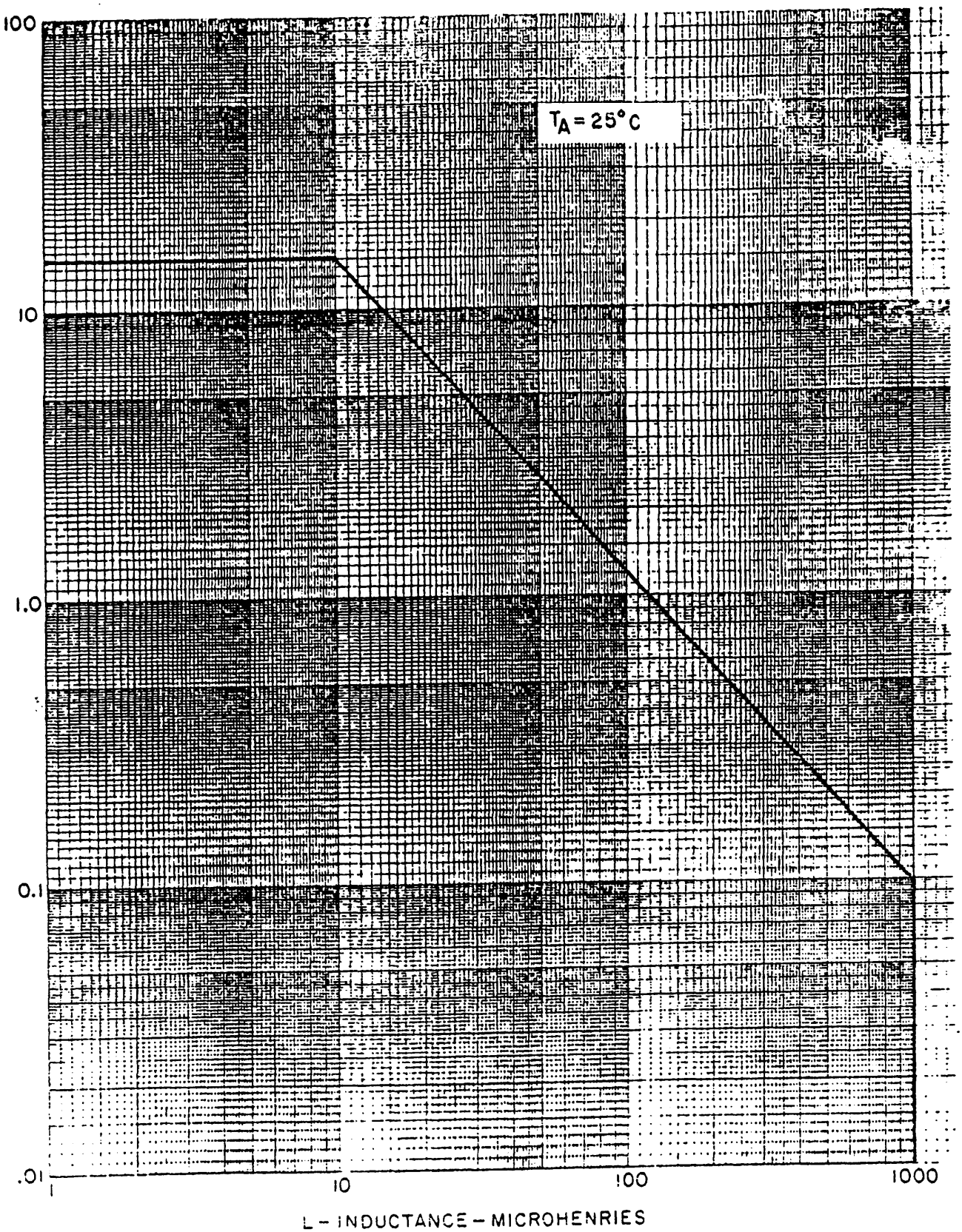

FIGURE 5. Safe operating area for switching between saturation and cutoff (unclamped inductive load).

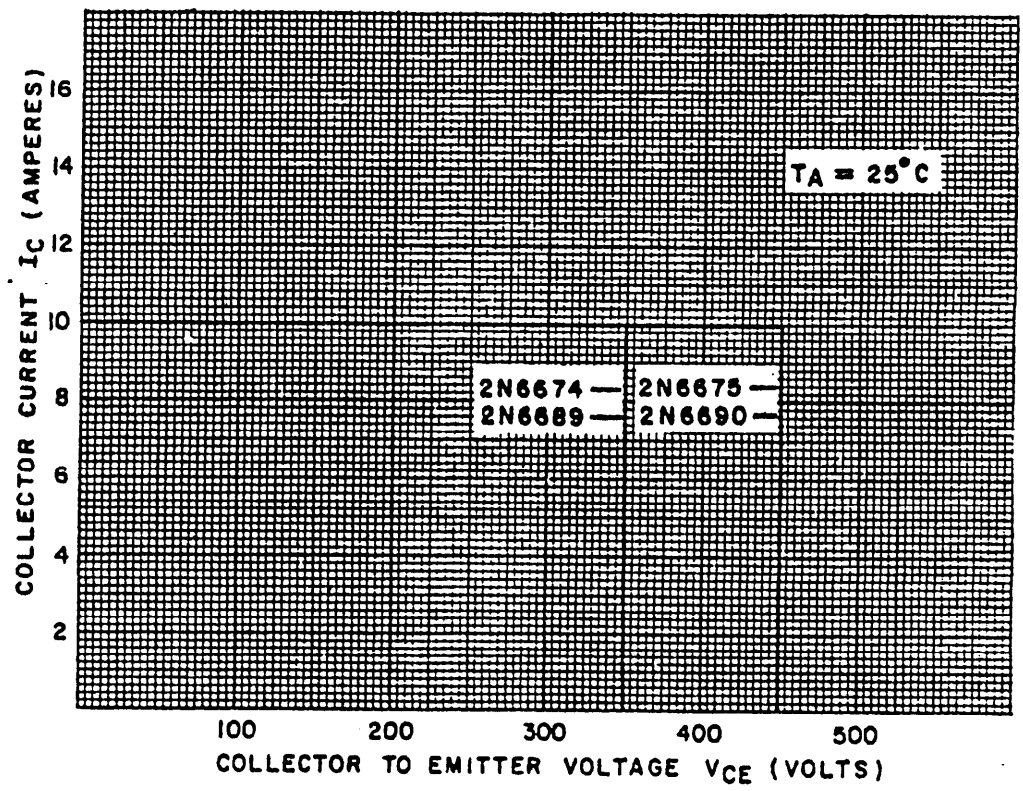

FIGURE 6. Safe operating area for switching between saturation and cutoff (clamped inductive load).

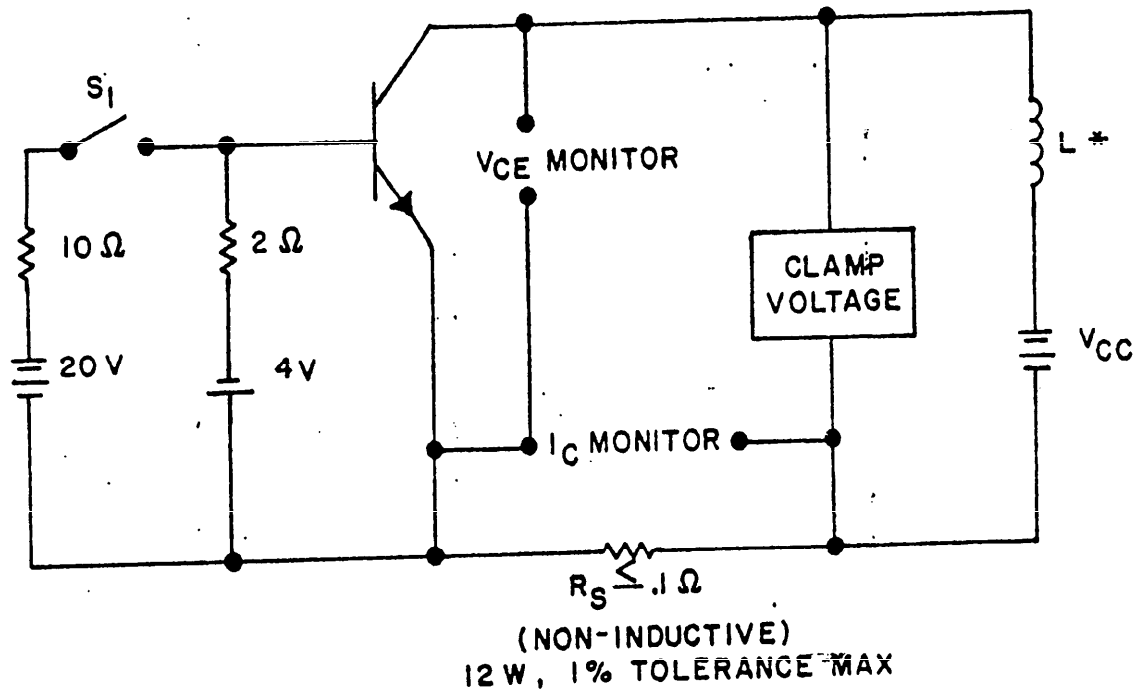

* L = 50 µH, .05 Ω, 10 A

Procedure:
1. With switch S_1 closed, set the specified test conditions.
2. Open S_1. Device fails if clamp voltage not reached.
3. Perform specified end point tests.

FIGURE 7. Clamped inductive sweep test circuit.

OLD

DEPARTMENT OF THE AIR FORCE
RADC
Griffis AFB, NY 13441

OFFICIAL BUSINESS
PENALTY FOR PRIVATE USE $300

NO POSTAGE NECESSARY IF MAILED IN THE UNITED STATES

BUSINESS REPLY MAIL

FIRST CLASS PERMIT NO. 73236 WASHINGTON D. C.

POSTAGE WILL BE PAID BY THE DEPARTMENT OF THE AIR FORCE

Rome Air Development Center
ATTN: RBE-2
Griffis AFB, NY 13441

OLD

(TO DETACH THIS FORM, CUT ALONG THIS LINE.)

STANDARDIZATION DOCUMENT IMPROVEMENT PROPOSAL

(See Instructions – Reverse Side)

1. DOCUMENT NUMBER

2. DOCUMENT TITLE

3a. NAME OF SUBMITTING ORGANIZATION

4. TYPE OF ORGANIZATION *(Mark one)*

- ☐ VENDOR
- ☐ USER
- ☐ MANUFACTURER
- ☐ OTHER *(Specify)*: _____

b. ADDRESS *(Street, City, State, ZIP Code)*

5. PROBLEM AREAS

a. Paragraph Number and Wording:

b. Recommended Wording:

c. Reason/Rationale for Recommendation:

6. REMARKS

7a. NAME OF SUBMITTER *(Last, First, MI)* – Optional

b. WORK TELEPHONE NUMBER *(Include Area Code)* – Optional

c. MAILING ADDRESS *(Street, City, State, ZIP Code)* – Optional

8. DATE OF SUBMISSION *(YYMMDD)*