MIL-S-19500/69E
22 November 1971
SUPERSEDING
MIL-S-19500/69D
4 March 1963

MILITARY SPECIFICATION

SEMICONDUCTOR DEVICE, TRANSISTOR, NPN, SILICON, LOW-POWER TYPES 2N337 AND 2N338

This specification is mandatory for use by all Departments and Agencies of the Department of Defense.

1. SCOPE

1.1 Scope. This specification covers the detail requirements for a low-power, NPN, silicon transistor.

1.2 Physical dimensions. See figure 1 (TO-5).

1.3 Maximum ratings.

P_T 1/ $T_A = 25°C$	I_C	V_{CBO}	V_{EBO}	V_{CEO}	T_{stg} and T_{op}
mW	mAdc	Vdc	Vdc	Vdc	°C
125	20	45	1.0	45	-65 to +150

1/ Derate 1.0 mW/°C for $T_A > 25°C$.

1.4 Primary electrical characteristics.

	h_{FE} $V_{CE} = 5.0$ Vdc $I_C = 10$ mAdc		f_{hfb} $V_{CB} = 20$ Vdc $I_E = 1.0$ mAdc		$V_{CE(sat)}$ $I_C = 10$ mAdc $I_B = 1.0$ mAdc	C_{obo} $V_{CB} = 20$ Vdc $V_{sig} = 0.1$ Vac 100 kHz $\leq f \leq$ 1 MHz
	2N337	2N338	2N337	2N338		
			MHz		Vdc	pF
Min	20	45	10	20	---	---
Max	55	150	---	---	1.5	3.0

2. APPLICABLE DOCUMENTS

2.1 The following documents, of the issue in effect on date of invitation for bids or request for proposal, form a part of the specification to the extent specified herein.

SPECIFICATION

MILITARY

MIL-S-19500 - Semiconductor Devices, General Specification for.

STANDARDS

MILITARY

MIL-STD-202 - Test Methods for Electronic and Electrical Component Parts.
MIL-STD-750 - Test Methods for Semiconductor Devices.

(Copies of specifications, standards, drawings, and publications required by suppliers in connection with specific procurement functions should be obtained from the procuring activity or as directed by the contracting officer.)

3. REQUIREMENTS

3.1 General. Requirements shall be in accordance with MIL-S-19500, and as specified herein.

3.2 Abbreviations, symbols, and definitions. The abbreviations, symbols, and definitions used herein are defined in MIL-S-19500.

3.3 Design, construction, and physical dimensions. Transistor shall be of the design, construction, and physical dimensions shown on figure 1.

3.3.1 Lead material and finish. Lead material shall be Kovar or Alloy 52. Lead finish shall be gold-plated. (Leads may be tin-coated if specified in the contract or order, and this requirement shall not be construed as adversely affecting the qualified-product status of the device, or applicable JAN marking (see 6.2)).

3.3.1.1 Selectivity of lead material. Where choice of lead material (see 3.3.1) is desired, it shall be specified in the contract or order (see 6.2).

3.3.2 Terminal-lead length. Terminal-lead length(s) other than that specified in figure 1 may be furnished when stipulated under contract or order (see 6.2) when the devices covered herein are required directly for particular equipment-circuit installation or for automatic-assembly-technique programs. When other lead lengths are required and provided, it shall not be construed as adversely affecting the qualified-product status of the device, or applicable JAN marking.

3.4 Performance characteristics. Performance characteristics shall be as specified in tables I, II, and III.

3.5 Marking. The following marking specified in MIL-S-19500 may be omitted from the body of the transistor at the option of the manufacturer:

(a) Country of origin.
(b) Manufacturer's identification.

4. QUALITY ASSURANCE PROVISIONS

4.1 Sampling and inspection. Sampling and inspection shall be in accordance with MIL-S-19500, and as specified herein.

4.2 Qualification inspection. Qualification inspection shall consist of the examinations and tests specified in tables I, II, and III.

4.3 Quality conformance inspection. Quality conformance inspection shall consist of groups A, B, and C inspections.

4.3.1 Group A inspection. Group A inspection shall consist of the examinations and tests specified in table I.

4.3.2 Group B inspection. Group B inspection shall consist of the examinations and tests specified in table II.

4.3.3 Group C inspection. Group C inspection shall consist of the examinations and tests specified in table III. This inspection shall be conducted on the initial lot and thereafter every 6 months during production.

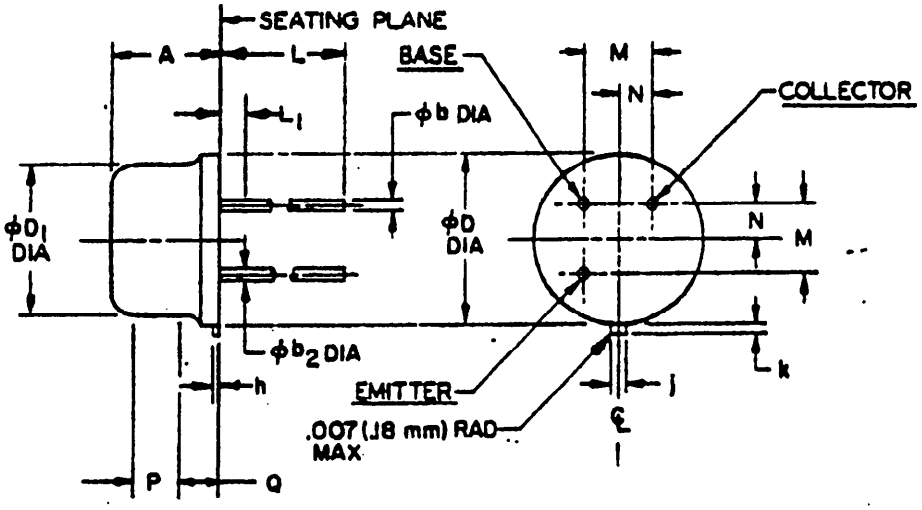

LTR	DIMENSIONS				NOTES
	INCHES		MILLIMETERS		
	MIN	MAX	MIN	MAX	
ØD	.335	.370	8.51	9.40	
ØD1	.305	.335	7.75	8.51	
A	.240	.260	6.10	6.60	
L	1.500	1.750	38.10	44.45	9
L1		.050		1.27	10
Øb	.016	.021	.41	.53	2, 9
Øb2	.016	.019	.41	.48	3, 9
P	.100		2.54		4
Q					5
k	.029	.045	.74	1.14	8
j	.028	.034	.71	.86	
h	.009	.041	.23	1.04	
M	.1414 Nom		3.59 Nom		6
N	.0707 Nom		1.80 Nom		6

NOTES:

1. Metric equivalents (to the nearest .01 mm) are given for general information only and are based upon 1 inch = 25.4 mm.
2. Measured in the zone beyond .250(6.35 mm) from the seating plane.
3. Measured in the zone .050(1.27 mm) and .250(6.35 mm) from the seating plane.
4. Variations on dimension $ØD_1$ in this zone shall not exceed .010(.25 mm).
5. Outline in this zone is not controlled.
6. When measured in a gaging plane .054+.001, -.000(1.37+.03, -.00mm) below the seating plane of the transistor maximum diameter leads shall be within .007(.18 mm) of their true location relative to a maximum width tab. Smaller diameter leads shall fall within the outline of the maximum diameter lead tolerance. Figure 2 preferred measured method.
7. All leads electrically insulated from the case.
8. Measured from the maximum diameter of the actual device.
9. All 3 leads. (See 3.3.1).
10. Diameter of leads in this zone is not controlled.

FIGURE 1. Physical dimensions of transistor types 2N337 and 2N338 (TO-5).

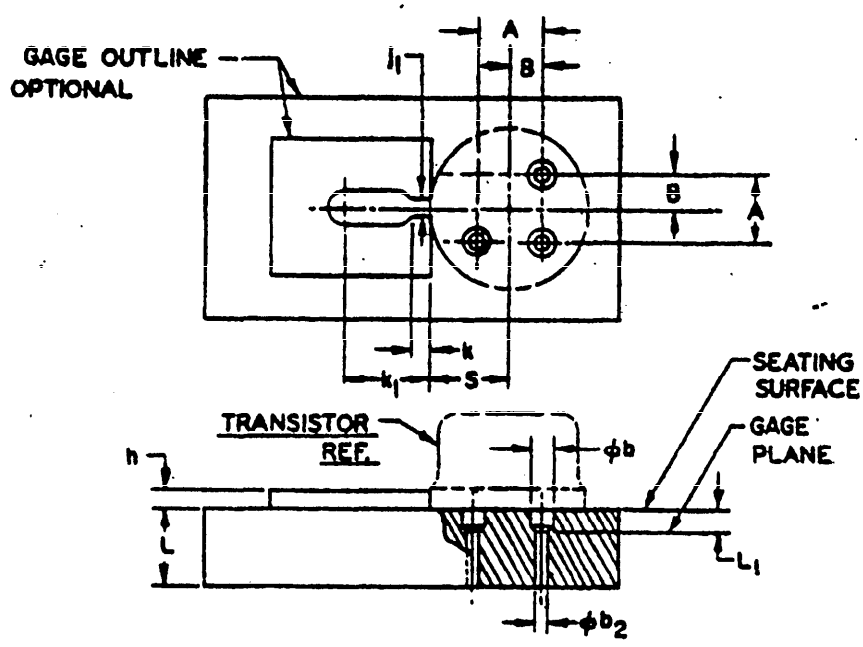

LTR	DIMENSIONS INCHES MIN	INCHES MAX	MILLIMETERS MIN	MILLIMETERS MAX	NOTES
A	.1409	.1419	3.58	3.60	
B	.0702	.0712	1.78	1.81	
S	.182	.199	4.62	5.05	
k	.009	.011	.23	.28	
k_1	.125 Nom		3.18 Nom		
L	.372	.378	9.45	9.60	
L_1	.054	.055	1.37	1.40	
j_1	.0350	.0355	.89	.90	
h	.150 Nom		3.81 Nom		
Øb	.0595	.0605	1.51	1.54	
$Øb_2$	.0325	.0335	.83	.85	

NOTES:

1. The following gaging procedure shall be used: The use of a pin straightener prior to insertion in the gage is permissible. The device being measured shall be inserted until its seating plane is .125±.010(3.18±.25 mm) from the seating surface of the gage. A spacer may be used to obtain the .125(3.18 mm) distance from the gage seat prior to force application. A force of 8 oz ±.5 oz shall then be applied parallel and symmetrical to the device's cylindrical axis. When examined visually after the force application (the force need not be removed) the seating plane of the device shall be seated against the gage.
2. The location of the tab locator, within the limits of dimension S, will be determined by the tab and flange dimension of the device being checked.
3. Metric equivalents (to the nearest .01 mm) are given for general information only and are based upon 1 inch = 25.4 mm.

FIGURE 2. Gage for lead and tab location for transistor types 2N337 and 2N338.

TABLE I. Group A inspection.

Examination or test	MIL-STD-750		LTPD		Limits		
	Method	Details		Symbol	Min	Max	Unit
Subgroup 1			10				
Visual and mechanical examination	2071			---	---	---	---
Subgroup 2			5				
Collector to base cutoff current	3036	Bias cond. D; V_{CB} = 30 Vdc		I_{CBO}	---	0.5	µAdc
Collector to emitter cutoff current	3041	Bias cond. D; V_{CE} = 30 Vdc		I_{CEO}	---	1	µAdc
Breakdown voltage, collector to base	3001	Bias cond. D; I_C = 50 µAdc		BV_{CBO}	45	---	Vdc
Breakdown voltage, collector to emitter	3011	Bias cond. D; I_C = 100 µAdc		BV_{CEO}	45	---	Vdc
Breakdown voltage, emitter to base	3026	Bias cond. D; I_E = 10 µAdc		BV_{EBO}	1	---	Vdc
Collector to emitter voltage (saturated)	3071	I_C = 10 mAdc; I_B = 1 mAdc		$V_{CE(sat)}$	---	1.5	Vdc
Subgroup 3			5				
Small-signal open-circuit output admittance	3216	V_{CB} = 20 Vdc; I_E = -1 mAdc		h_{ob}	0	1	µmho
Small-signal open-circuit reverse-voltage transfer ratio	3211	V_{CB} = 20 Vdc; I_E = -1 mAdc		h_{rb}	0	20×10^{-4}	---
Small-signal short-circuit input impedance	3201	V_{CB} = 20 Vdc; I_E = -1 mAdc		h_{ib}	30	80	ohms
Small-signal short-circuit forward-current transfer ratio:	3206	V_{CB} = 20 Vdc; I_E = -1 mAdc		h_{fe}			
2N337					20	---	---
2N338					40	---	---
Forward-current transfer ratio	3076	V_{CE} = 5 Vdc; I_C = 100 µAdc		h_{FE}			
2N337					5	---	---
2N338					10	---	---
Forward-current transfer ratio	3076	V_{CE} = 5 Vdc; I_C = 10 mAdc; pulsed (see 4.4.1)		h_{FE}			
2N337					20	55	---
2N338					45	150	---
Subgroup 4			10				
Magnitude of common emitter small-signal short-circuit forward-current transfer ratio	3306	V_{CB} = 20 Vdc; I_E = -1 mAdc; f = 2.5 MHz		$\lvert h_{fe} \rvert$			
2N337					5	30	--
2N338					10	35	--

TABLE I. Group A inspection - Continued.

Examination or test	MIL-STD-750		LTPD	Symbol	Limits		Unit
	Method	Details			Min	Max	
Subgroup 4 (cont'd)							
Magnitude of common emitter small-signal short-circuit forward-current transfer ratio	3306	V_{CB} = 20 Vdc; I_E = -1 mAdc; f = 10 MHz		$\lvert h_{fe} \rvert$			
2N337					---	8	---
2N338					---	10	---
Small-signal short-circuit forward-current transfer-ratio cutoff frequency	3301	V_{CB} = 20 Vdc I_E = -1 mAdc		f_{hfb}			
2N337					10	---	MHz
2N338					20	---	MHz
Open circuit output capacitance	3236	V_{CB} = 20 Vdc; V sig = 0.1 Vac 100 kHz $\leq f \leq$ 1 MHz		C_{obo}	---	3	pF
Noise figure	3246	V_{CB} = 5 Vdc; I_E = -1 mAdc;		NF	---	30	dB
Subgroup 5			10				
Pulse response:	3251	(see figure 3)					
Turn-on time				t_{on}			
2N337					---	0.35	µs
2N338					---	0.35	µs
Fall time				t_f			
2N337					---	0.20	µs
2N338					---	0.35	µs
Storage time				t_s			
2N337					---	0.20	µs
2N338					---	0.35	µs
Subgroup 6			10				
High-temperature operation:		T_A = 150°C					
Collector to base cutoff current	3036	Bias cond. D; V_{CB} = 30 Vdc		I_{CBO}	---	25	µAdc
Low-temperature operation:		T_A = -55°C					
Forward-current transfer ratio	3076	V_{CE} = 5.0 Vdc; I_C = 10 mAdc; pulsed (see 4.4.1)		h_{FE}			
2N337					10	---	---
2N338					20	---	---

TABLE II. Group B inspection.

Examination or test	MIL-STD-750		LTPD		Limits		
	Method	Details		Symbol	Min	Max	Unit
Subgroup 1			20				
Physical dimensions	2066	(see figure 1)		---	---	---	---
Subgroup 2			15				
Solderability	2026			---	---	---	---
Thermal shock (temperature cycling)	1051	Test cond. C, except T(high) = +150°C; 10 cycles; exposure time at temp extremes = 15 minutes (min)		---	---	---	---
Thermal shock (glass strain)	1056	Test cond. A		---	---	---	---
Moisture resistance	1021			---	---	---	---
End points:							
Collector to base cutoff current	3036	Bias cond. D; V_{CB} = 30 Vdc		I_{CBO}	---	0.5	µAdc
Forward-current transfer ratio	3076	V_{CE} = 5 Vdc; I_C = 10 mAdc; pulsed (see 4.4.1)		h_{FE}			
2N337					20	55	---
2N338					45	150	---
Subgroup 3			15				
Shock	2016	Nonoperating; 1,500 G, 0.5 ms; 5 blows in each orientation: X_1, Y_1, Y_2, and Z_1		---	---	---	---
Vibration, variable frequency	2056			---	---	---	---
Constant acceleration	2006	20,000 G; in each orientation: X_1, Y_1, Y_2, and Z_1		---	---	---	---
End points: (Same as subgroup 2)							
Subgroup 4			20				
Terminal strength (lead fatigue)	2036	Test cond. E		---	---	---	---
End points:							
Hermetic seal	1071	Test cond. G or H for fine leaks; test cond. A, C, D, or F for gross leaks		---	---	1×10^{-7}	atm cc/sec

TABLE II. Group B inspection - Continued.

Examination or test	MIL-STD-750		LTPD		Limits		
	Method	Details		Symbol	Min	Max	Unit
Subgroup 5			20				
Salt atmosphere (corrosion)	1041			---	---	---	---
Subgroup 6			7				
High-temperature life (nonoperating)	1032	T_{stg} = +150°C; time = 340 hours (see 4.3.4)		---	---	---	---
End points:							
Collector to base cutoff current	3036	Bias cond. D; V_{CB} = 30 Vdc		I_{CBO}	---	1.0	µAdc
Forward-current transfer ratio	3076	V_{CE} = 5 Vdc; I_C = 10 mAdc; pulsed (see 4.4.1)		h_{FE}			
2N337					16	---	---
2N338					35	---	---
Breakdown voltage, collector to base	3001	Bias cond. D; I_C = 50 µAdc		BV_{CBO}	40	---	Vdc
Subgroup 7			7				
Steady-state operation life	1027	T_A = +25°C; V_{CB} = 20 Vdc; P_T = 125 mW; time = 340 hours (see 4.3.4)		---	---	---	---
End points: (Same as subgroup 6)							

TABLE III. Group C inspection.

Examination or test	MIL-STD-750		LTPD		Limits		
	Method	Details		Symbol	Min	Max	Unit
Subgroup 1			10				
Resistance to solvents	---	Method 215 of MIL-STD-202 (see 4.4.2)		---	---	---	---
Subgroup 2			λ = 10				
High-temperature life (nonoperating)	1031	T_{stg} = +150°C (see 4.3.4)		---	---	---	---
End points: (Same as subgroup 6 of group B)							
Subgroup 3			λ = 10				
Steady-state operation life	1026	T_A = +25°C; V_{CB} = 20 Vdc; P_T = 125 mW; (see 4.3.4)		---	---	---	---
End points: (Same as subgroup 6 of group B)							

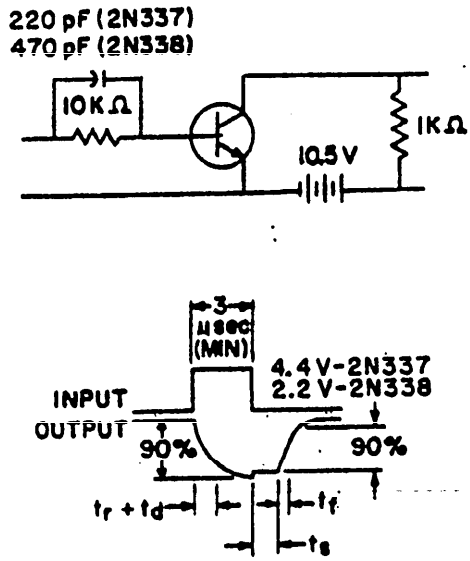

NOTE: SWITCHING TIMES DO NOT INCLUDE OSCILLOSCOPE RESPONSE TIME.

FIGURE 3. Switching time test circuit.

4.3.4 Group B and group C life-test samples. Samples that have been subjected to group B, 340-hour life-test, may be continued on test to 1,000 hours in order to satisfy group C life-test requirements. These samples shall be predesignated, and shall remain subjected to the group C 1,000-hour acceptance evaluation after they have passed the group B, 340-hour acceptance criteria. The cumulative total of failures found during 340-hour test and during the subsequent interval up to 1,000 hours shall be computed for 1,000-hour acceptance criteria (see 4.3.3).

4.4 Methods of examination and test. Methods of examination and test shall be as specified in tables I, II, and III, and as follows:

4.4.1 Pulse measurements. Conditions for pulse measurement shall be as specified in section 4 of MIL-STD-750.

4.4.2 Resistance to solvents. Transistors shall be subjected to tests in accordance with method 215 of MIL-STD-202. The following details shall apply:

(a) All areas of the transistor body where marking has been applied shall be brushed.
(b) After subjection to the tests there shall be no evidence of mechanical damage to the device and markings shall have remained legible.

5. PREPARATION FOR DELIVERY

5.1 See MIL-S-19500, section 5.

6. NOTES

6.1 Notes. The notes specified in MIL-S-19500 are applicable to this specification.

6.2 Ordering data.

(a) Lead finish if other than gold-plated (see 3.3.1).
(b) Lead material (see 3.3.1.1).
(c) Terminal-lead length if other than specified in figure 1 (see 3.3.2).

Custodians:
Army - EL
Navy - EC
Air Force - 17

Review activities:
Army - MU, MI
Navy -
Air Force - 11, 80
DSA - ES

User activities:
Army - SM
Navy - CG, MC, SH, AS
Air Force - 13, 15, 19

Preparing activity:
Navy - EC

Agent:
DSA - ES

(Project 5961-0216)