MIL-S-19500/99E
31 July 1967
SUPERSEDING
MIL-S-19500/99D
3 December 1964

MILITARY SPECIFICATION

SEMICONDUCTOR DEVICE, TRANSISTOR, NPN, SILICON, SWITCHING, MEDIUM-POWER

TYPES 2N696 AND 2N697

This specification is mandatory for use by all Departments and Agencies of the Department of Defense.

1. SCOPE

1.1 Scope. This specification covers the detail requirements for NPN, silicon, switching, medium-power transistors.

1.2 Physical dimensions. See figure 1 (TO-5).

1.3 Maximum ratings.

P_T		V_{CBO}	V_{EBO}	V_{CER}	θ_{J-C}	T_{stg}
T_C = 25° C 1/	T_A = 25° C 2/			R_{BE} = 10 ohms		
W	W	Vdc	Vdc	Vdc	°C/mW	°C
2	0.6	60	5	40	0.075	-65 to +200

1/ Derate linearly 13.3 mW/°C for $T_C > 25°C$.
2/ Derate linearly 4 mW/°C for $T_A > 25°C$.

1.4 Primary electrical characteristics.

	h_{FE} 1/ I_C = 150 mAdc V_{CE} = 10 Vdc		$\|h_{fe}\|$ V_{CE} = 10 Vdc I_C = 50 mAdc f = 20 MHz		Switching		C_{obo} V_{CB} = 10 Vdc I_E = 0 100 kHz ≤ f ≤ 1 MHz	V_{CE}(sat) 1/ I_C = 150 mAdc I_B = 15 mAdc	V_{BE}(sat) 1/ I_C = 150 mAdc I_B = 15 mAdc
					t_{on}	t_{off}			
	2N696	2N697	2N696	2N697	nsec	nsec	pf	Vdc	Vdc
Min	20	40	2.5	3.0	---	---	8	0.3	---
Max	60	120	10	12	200	1,000	25	1.5	1.3

1/ Pulsed (see 4.4.1).

2. APPLICABLE DOCUMENTS

2.1 The following documents, of the issue in effect on date of invitation for bids or request for proposal, form a part of the specification to the extent specified herein.

SPECIFICATION

MILITARY

MIL-S-19500 - Semiconductor Devices, General Specification for.

STANDARDS

MILITARY

MIL-STD-202 - Test Methods for Electronic and Electrical Component Parts.
MIL-STD-750 - Test Methods for Semiconductor Devices.

(Copies of specifications, standards, drawings, and publications required by suppliers in connection with specific procurement functions should be obtained from the procuring activity or as directed by the contracting officer.)

3. REQUIREMENTS

3.1 General. Requirements shall be in accordance with MIL-S-19500, and as specified herein.

3.2 Abbreviations, symbols, and definitions. The abbreviations, symbols, and definitions used herein are defined in MIL-S-19500, and as follows:

t_{off} - - - - - - - - - - - - - $t_s + t_f$

3.3 Design, construction, and physical dimensions. Transistors shall be of the design, construction, and physical dimensions shown on figure 1.

3.3.1 Lead material and finish. Lead material and finish shall be gold-plated Kovar. (Leads may be tin-coated if specified in the contract or order, and it shall not be construed as adversely affecting the qualified-product status of the device, or applicable JAN marking (see 6.2).

3.3.2 Terminal-lead length. Terminal-lead length(s) other than that specified in figure 1 may be furnished under contract or order (see 6.2) where the devices covered herein are required directly for particular equipment-circuit installation or for automatic-assembly-technique programs. Where other lead lengths are required and provided, it shall not be construed as adversely affecting the qualified-product status of the device, or applicable JAN marking (see 6.2).

3.4 Performance characteristics. Performance characteristics shall be as specified in tables I, II, and III.

3.5 Marking. The following marking specified in MIL-S-19500 may be omitted from the body of the transistor at the option of the manufacturer:

(a) Country of origin.
(b) Manufacturer's identification.

4. QUALITY ASSURANCE PROVISIONS

4.1 Sampling and inspection. Sampling and inspection shall be in accordance with MIL-S-19500, and as specified herein.

4.2 Qualification inspection. Qualification inspection shall consist of the examinations and tests specified in tables I, II, and III.

4.3 Quality conformance inspection. Quality conformance inspection shall consist of groups A, B, and C inspections.

4.3.1 Group A inspection. Group A inspection shall consist of the examinations and tests specified in table I.

4.3.2 Group B inspection. Group B inspection shall consist of the examinations and tests specified in table II.

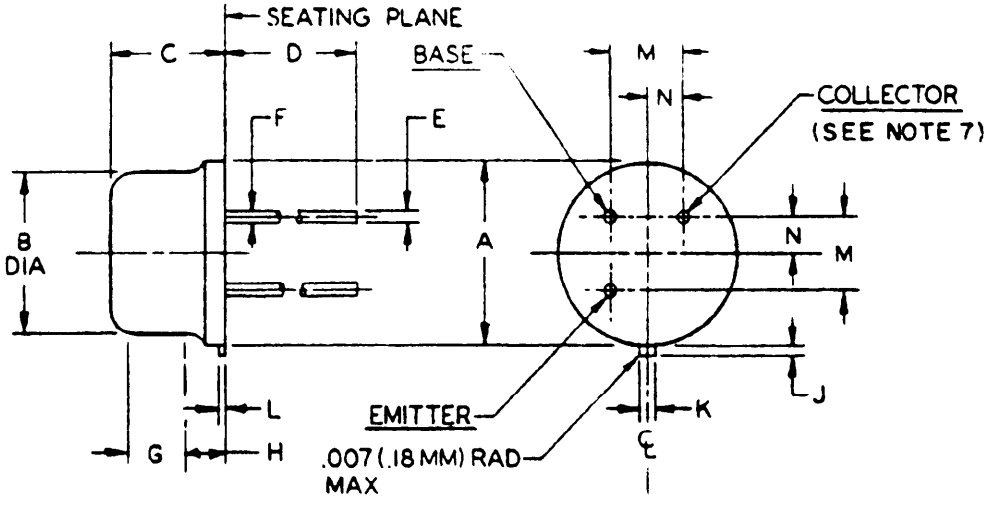

DIMENSIONS					NOTES
LTR	INCHES		MILLIMETERS		
	MIN	MAX	MIN	MAX	
A	.335	.370	8.51	9.40	
B	.305	.335	7.75	8.51	
C	.240	.260	6.10	6.60	
D	1.500	750	38.10	44.45	9
E	.016	.021	.41	.53	2,9
F	.016	.019	.41	.48	3,9
G	.100		2.54		4
H					5
J	.029	.045	.74	1.14	8
K	.028	.034	.71	.86	
L	.009	.125	.23	3.18	
M	.1414 Nom		3.59 Nom		6
N	.0707 Nom		1.80 Nom		6

NOTES:
1. Metric equivalents (to the nearest .01 mm) are given for general information only and are based upon 1 inch = 25.4 mm.
2. Measured in the zone beyond .250 (6.35 mm) from the seating plane.
3. Measured in the zone .050 (1.27 mm) and .250 (6.35 mm) from the seating plane.
4. Variations on Dimension B in this zone shall not exceed .010 (.25 mm).
5. Outline in this zone is not controlled.
6. When measured in a gaging plane .054+.001, −.000 (1.37+.03, −.00 mm) below the seating plane of the transistor maximum diameter leads shall be within .007 (.18 mm) of their true location relative to a maximum width tab. Smaller diameter leads shall fall within the outline of the maximum diameter lead tolerance. Figure 2 preferred measured method.
7. The collector shall be internally connected to the case.
8. Measured from the maximum diameter of the actual device.
9. All 3 leads (See 3.3.1 and 3.3.2).

FIGURE 1. Physical dimensions of transistor types 2N696 and 2N697 (TO-5).

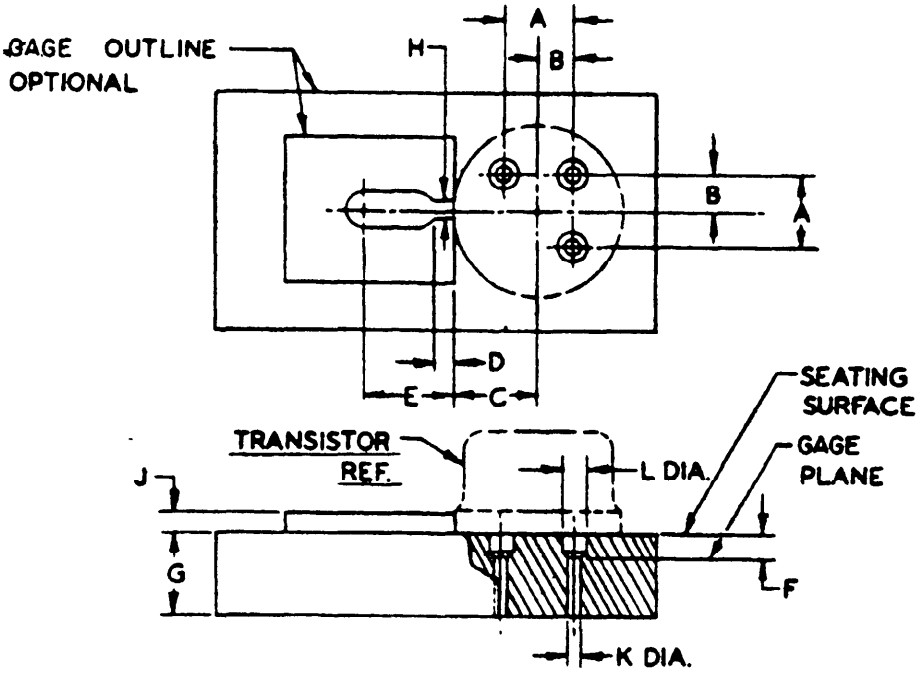

LTR	DIMENSIONS				NOTES
	INCHES		MILLIMETERS		
	MIN	MAX	MIN	MAX	
A	.1409	.1419	3.58	3.60	
B	.0702	.0712	1.78	1.81	
C	.182	.199	4.62	5.05	
D	.009	.011	.23	.28	
E	.125 Nom		3.18 Nom		
F	.054	.055	1.37	1.40	
G	.372	.378	9.45	9.60	
H	.0350	.0355	.89	.90	
J	.150 Nom		3.81 Nom		
K	.0325	.0335	.83	.85	
L	.0595	.0605	1.51	1.54	

NOTES:

1. The following gaging procedure shall be used: The use of a pin straightener prior to insertion in the gage is permissible. The device being measured shall be inserted until its seating plane is .125±.010 (3.18 mm ±.25 mm) from the seating surface of the gage. A spacer may be used to obtain the .125 (3.18 mm) distance from the gage seat prior to force application. A force of 8 oz ±.5 oz shall then be applied parallel and symmetrical to the device's cylindrical axis. When examined visually after the force application (the force need not be removed) the seating plane of the device shall be seated against the gage.
2. The location of the tab locator, within the limits of dim C, will be determined by the tab and flange dimension of the device being checked.
3. Metric equivalents (to the nearest .01 mm) are given for general information only and are based upon 1 inch = 25.4 mm.

FIGURE 2. Gage for lead and tab location for transistor types 2N696 and 2N697.

4.3.3 Group C inspection. Group C inspection shall consist of the examinations and tests specified in table III. This inspection shall be conducted on the initial lot and thereafter every 6 months during production.

4.3.4 Group B and group C life-test samples. Samples that have been subjected to group B, 340-hours life-test, may be continued on test to 1,000 hours in order to satisfy group C life-test requirements. These samples shall be predesignated, and shall remain subjected to the group C 1,000 hour acceptance evaluation after they have passed the group B, 340-hour acceptance criteria. The cumulative total of failures found during 340-hour test and during the subsequent interval up to 1,000 hours shall be computed for 1,000-hour acceptance criteria (see 4.3.3).

4.4 Methods of examination and test. Methods of examination and test shall be as specified in tables I, II, and III, and as follows:

4.4.1 Pulse measurements. Conditions for pulse measurement shall be as specified in section 4 of MIL-STD-750.

4.4.2 Interval for end-point test measurements. End-point tests shall be completed within the following time limitations after completion of the last test in the subgroup:

(a) Qualification inspection - Within 24 hours.
(b) Quality conformance inspection - Within 96 hours.

TABLE I. Group A inspection.

Examination or test	MIL-STD-750		LTPD	Symbol	Limits		
	Method	Details			Min	Max	Unit
Subgroup 1			10				
Visual and mechanical examination	2071			---	---	---	---
Subgroup 2			5				
Breakdown voltage, collector to base	3001	Bias cond. D; I_C = 100 μAdc		BV_{CBO}	60	---	Vdc
Breakdown voltage, emitter to base	3026	Bias cond. D; I_E = 100 μAdc		BV_{EBO}	5.0	---	Vdc
Breakdown voltage, collector to emitter	3011	Bias cond. B; I_C = 100 mAdc; R_{BE} = 10 ohms; pulsed (see 4.4.1)		BV_{CER}	40	---	Vdc
Collector to base cutoff current	3036	Bias cond. D; V_{CB} = 30 Vdc		I_{CBO}	---	0.1	μAdc
Subgroup 3			5				
Forward-current transfer ratio	3076	V_{CE} = 10 Vdc; I_C = 10 mAdc; pulsed (see 4.4.1)		h_{FE}			
2N696					20	---	---
2N697					40	---	---

TABLE I. Group A inspection - Continued

Examination or test	MIL-STD-750		LTPD	Symbol	Limits		
	Method	Details			Min	Max	Unit
Subgroup 3 - Continued							
Forward-current transfer ratio	3076	V_{CE} = 10 Vdc; I_C = 150 mAdc; pulsed (see 4.4.1)		h_{FE}			
2N696					20	60	---
2N697					40	120	---
Forward-current transfer ratio	3076	V_{CE} = 10 Vdc; I_C = 500 mAdc; pulsed (see 4.4.1)		h_{FE}			
2N696					12.5	---	---
2N697					20.0	---	---
Subgroup 4			5				
Collector to emitter voltage (saturated)	3071	I_C = 150 mAdc; I_B = 15 mAdc; pulsed (see 4.4.1)		$V_{CE}(sat)$	0.3	1.5	Vdc
Base emitter voltage (saturated)	3066	Test cond. A; I_C = 150 mAdc; I_B = 15 mAdc; pulsed (see 4.4.1)		$V_{BE}(sat)$	---	1.3	Vdc
Magnitude of common-emitter small-signal short-circuit forward-current transfer ratio	3306	I_C = 50 mAdc; V_{CE} = 10 Vdc; f = 20 MHz		$\lvert h_{fe} \rvert$			
2N696					2.5	10	---
2N697					3.0	12	---
Open circuit output capacitance	3236	V_{CB} = 10 Vdc; I_E = 0; 100 kHz $\leq$ f $\leq$ 1 MHz		C_{obo}	8	25	pf
Subgroup 5			10				
Low-temperature operation: Forward-current transfer ratio	3076	T_A = -55° C; I_C = 10 mAdc; V_{CE} = 10 Vdc; pulsed (see 4.4.1)		h_{FE}			
2N696					10	---	---
2N697					20	---	---
High-temperature operation: Collector to base cutoff current	3036	T_A = 150° C; Bias cond. D; V_{CB} = 30 Vdc		I_{CBO}	---	10	µAdc
Subgroup 6			10				
Switching time:							
Turn-on time	---	(see figure 3)		t_{on}	---	200	nsec
Turn-off time	---	(see figure 4)		t_{off}	---	1000	nsec

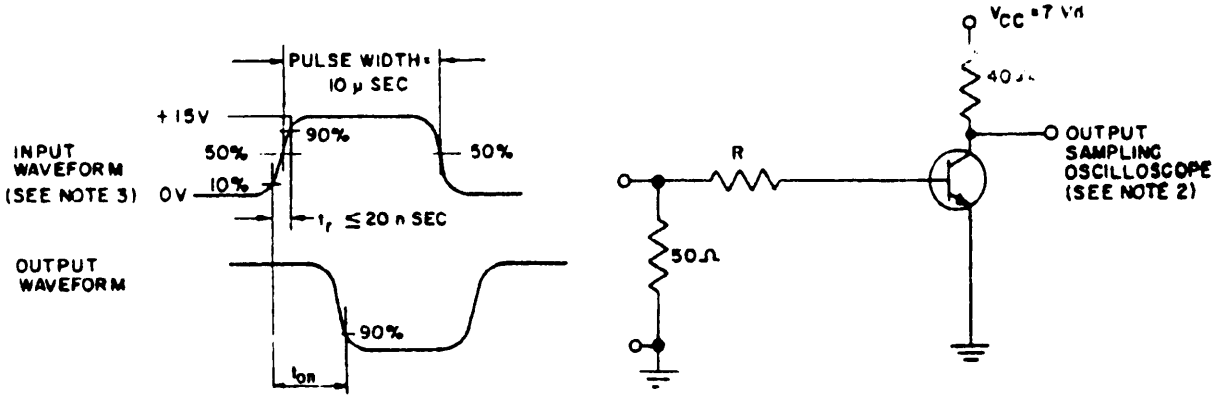

NOTES:
1. Equivalent circuits may be used.
2. Sampling oscilloscope: $Z_{in} \geq 100$ K ohms, $C_{in} \leq 12$ pf, $t_r \leq 15$ nsec.
3. Duty cycle = 1%.

FIGURE 3. Switching-time ($t_d + t_r$) test circuit.

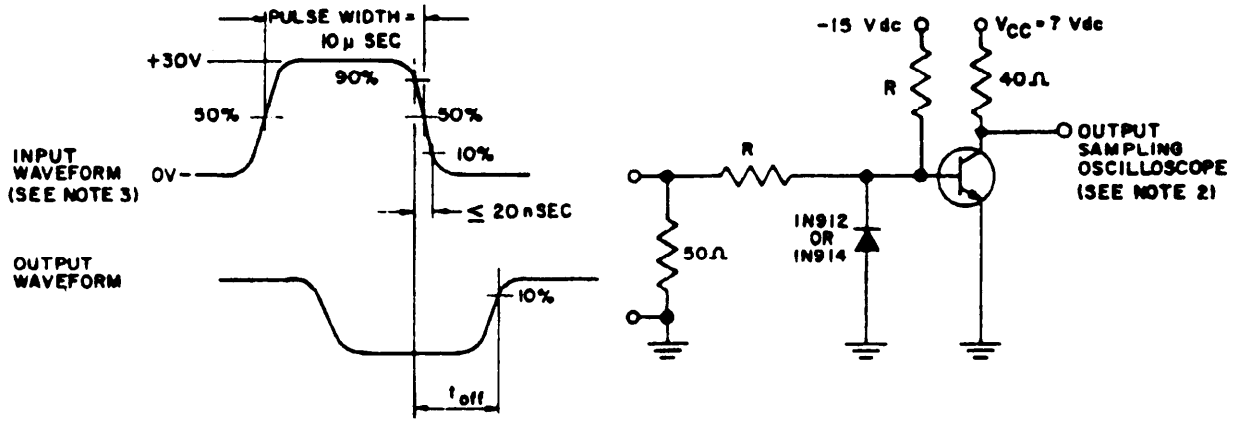

NOTES:
1. Equivalent circuits may be used.
2. Sampling oscilloscope: $Z_{in} \geq 100$ K ohms, $C_{in} \leq 12$ pf, $t_r \leq 15$ nsec.
3. Duty cycle = 1%.

FIGURE 4. Switching time ($t_s + t_f$) test circuits.

TABLE II. Group B inspection

Examination or test	MIL-STD-750		LTPD	Symbol	Limits		
	Method	Details			Min	Max	Unit
Subgroup 1			20				
Physical dimensions	2066			---	---	---	---
Subgroup 2			10				
Solderability	2026	Omit aging		---	---	---	---
Thermal shock (temperature cycling)	1051	Test cond. C		---	---	---	---
Thermal shock (glass strain)	1056	Test cond. A		---	---	---	---
Seal (leak-rate)	---	MIL-STD-202, method 112, test cond. C, procedure III; test cond. A for gross leaks		---	$5x10^{-7}$		atm cc/sec
Moisture resistance	1021			---	---	---	---
End points: (See 4.4.2.)							
Collector to base cutoff current	3036	Bias cond. D; V_{CB} = 30 Vdc		I_{CBO}	---	0.1	μAdc
Collector to emitter voltage (saturated)	3071	I_C = 150 mAdc; I_B = 15 mAdc; pulsed (see 4.4.1)		V_{CE}(sat)	0.3	1.5	Vdc
Base emitter voltage (saturated)	3066	Test cond. A; I_C = 150 mAdc; I_B = 15 mAdc; pulsed (see 4.4.1)		V_{BE}(sat)	---	1.3	Vdc
Subgroup 3			10				
Shock	2016	Nonoperating; 1500 G; 0.5 msec; 5 blows in each orientation: X_1, Y_1, Y_2 and Z_1		---	---	---	---
Vibration fatigue	2046	Nonoperating		---	---	---	---
Vibration, variable frequency	2056			---	---	---	---
Constant acceleration	2006	20,000 G; in each orientation: $\bar{X}_1$, $\bar{Y}_1$, $\bar{Y}_2$, and Z_1		---	---	---	---
End points: (Same as subgroup 2)							
Subgroup 4			20				
Terminal strength (lead fatigue)	2036	Test cond. E		---	---	---	---

TABLE II. Group B inspection - Continued

Examination or test	MIL-STD-750		LTPD	Symbol	Limits		
	Method	Details			Min	Max	Unit
Subgroup 5			20				
Salt atmosphere (corrosion)	1041			---	---	---	---
End points: (Same as subgroup 2)							
Subgroup 6			5				
High-temperature life (nonoperating)	1031	T_{stg} = +200° C; t = 340 hrs (see 4.3.4)		---	---	---	---
End points: (See 4.4.2.)							
Collector to base cutoff current	3036	Bias cond. D; V_{CB} = 30 Vdc		I_{CBO}	---	0.2	μAdc
Forward-current transfer ratio	3076	I_C = 150 mAdc; V_{CE} = 10 Vdc; pulsed (see 4.4.1)		h_{FE}			
2N696					15	75	---
2N697					30	150	---
Subgroup 7			7				
Steady-state operation life	1026	T_A = 25° C; V_{CE} = 30 Vdc; P_T = 600 mW; t = 340 hrs (see 4.3.4)		---	---	---	---
End points: (Same as subgroup 6)							

TABLE III. Group C inspection

Examination or test	MIL-STD-750		LTPD	Symbol	Limits		
	Method	Details			Min	Max	Unit
Subgroup 1			20				
Barometric pressure, reduced (altitude operation)	1001	Normal mounting; pressure = 8 mm Hg for 60 sec min		---	---	---	---
Measurement during test:							
Collector to base cutoff current	3036	Bias cond. D; V_{CB} = 60 Vdc		I_{CBO}	---	100	μAdc
Thermal resistance, junction to case	3151			θ_{J-C}	---	0.075	°C/mW

TABLE III. Group C inspection - Continued

Examination or test	MIL-STD-750		LTPD	Symbol	Limits		
	Method	Details			Min	Max	Unit
Subgroup 2			λ = 7				
High-temperature life (nonoperating)	1031	T_{stg} = +200° C (see 4.3.4)		---	---	---	---
End points: (Same as subgroup 6 of group B)							
Subgroup 3			λ = 10				
Steady-state operation life	1026	V_{CE} = 30 Vdc; P_T = 600 mW; T_A = 25° C (see 4.3.4)		---	---	---	---
End points: (Same as subgroup 6 of group B)							

5. PREPARATION FOR DELIVERY

5.1 See MIL-S-19500, section 5.

6. NOTES

6.1 Notes. The notes specified in MIL-S-19500 are applicable to this specification.

6.2 Ordering data.

(a) Lead finish, if other than gold-plated Kovar. (See 3.3.1.)
(b) Terminal-lead length, if other than specified in figure 1. (See 3.3.2.)

6.3 Changes from previous issue. Asterisks are not used in this revision to identify changes with respect to the previous issue, due to the extensiveness of the changes.

6.4 Substitution criteria. The devices covered herein are interchangeable with the corresponding devices covered by the superseded MIL-S-19500/99D.

Custodians:
Army - EL
Navy - SH
Air Force - 11

Review activities:
Army - EL, MU, MI
Navy - SH
Air Force - 11, 17, 85

User activities:
Army - EL, SM
Navy - CG, MC, AS, OS
Air Force - 14, 19

Preparing activity:
Army - EL

(Project 5961-0009-19)

Code "C"