NOTE: The document identifier and heading have been changed on this page to reflect that this is a performance specification. There are no other changes to this document. The document identifier on subsequent pages has not been changed, but will be changed the next time this document is revised.

MIL-PRF-19500/211B
18 May 1983
SUPERSEDING
MIL-S-19500/211A
25 February 1966

PERFORMANCE SPECIFICATION SHEET

SEMICONDUCTOR DEVICE, DIODE, SILICON, POWER RECTIFIER, TYPES 1N3164, 1N3168, 1N3170, 1N3172, 1N3174, 1N3175, 1N3176, 1N3177 and R TYPES JAN, JANTX, JANTXV

This specification is approved for use by all Departments and Agencies of the Department of Defense.

1. SCOPE

1.1 Scope. This specification covers the detail requirements for silicon power rectifier. Three levels of product assurance are provided for each device type as specified in MIL-S-19500.

1.2 Normal and reverse types (reverse types, suffix R). Reverse and normal types are identical except: The normal types have the cathode connected to the stud and the reverse types have the anode connected to the stud. Designated values are applicable to both types.

1.3 Physical dimensions. See figure 1 (DO-205AB - formerly DO-9).

1.4 Ratings and characteristics:

Types	V_{RSM}	V_{RWM}	I_O 1/ T_C = 150°C	I_O 1/ T_C = 120°C	I_{FSM} 1/120s	Barometric pressure (reduced)	T_J and T_{STG}
	v(pk)	v(pk)	A dc	A dc	a	mmHg	°C
1N3164	240	200	200	300	6250	----	-65
1N3168	480	400	200	300	6250	8	to
1N3170	720	600	200	300	6250	8	
1N3172	960	800	200	300	6250	15	+200
1N3174	1200	1000	200	300	6250	15	
1N3175	1440	1200	200	300	6250	33	
1N3176	1680	1400	200	300	6250	33	
1N3177	1920	1600	200	300	6250	54	

1/ Derate linearity at: 4.0 A dc/°C for 150°C < T_C < 200°C.
3.33 A dc/°C for 120°C < T_C < 150°C.

1.5 Thermal resistance characteristic: $R_{\theta JC}$ = 0.15°C/W.

Beneficial comments (recommendations, additions, deletions) and any pertinent data which may be of use in improving this document should be addressed to: Commander, US Army Electronics Research and Development Command, ATTN: DRDEL-ED, Adelphi, MD 20783, by using the self-addressed Standardization document Improvement Proposal (DD Form 1426) appearing at the end of this document or by letter.

2. APPLICABLE DOCUMENTS

2.1 Government specifications and standards. Unless otherwise specified, the following specifications and standards, of the issue listed in that issue of the Department of Defense Index of Specifications and Standards specified in the solicitation, form a part of this specification to the extent specified herein.

SPECIFICATION

MILITARY

MIL-S-19500 - Semiconductor Devices, General Specification for.

STANDARDS

FEDERAL

FED-STD-H28 - Screw-Thread Standards for Federal Services.

MILITARY

MIL-STD-750 - Test Methods for Semiconductor Devices.

(Copies of specifications, standards, handbooks, drawings, and publications required by manufacturers in connection with specific acquisition functions should be obtained from the contracting activity or as directed by the contracting officer.)

3. REQUIREMENTS

3.1 Detail specification. The individual item requirements shall be in accordance with MIL-S-19500, and as specified herein.

3.2 Abbreviations, symbols, and definitions. The abbreviations, symbols, and definitions used herein shall be as specified in MIL-S-19500.

3.3 Design, construction, and physical dimensions. The design, construction, and physical dimensions shall be as specified in MIL-S-19500 and figure 1 herein.

3.4 Marking. Devices shall be marked as specified in MIL-S-19500. At the option of the manufacturer, the following may be omitted from the body of the device.

a. Manufacturer's identification.

b. Country of origin.

4. QUALITY ASSURANCE PROVISIONS

4.1 Sampling and inspection. Sampling and inspection shall be in accordance with MIL-S-19500, and as specified herein.

4.2 Qualification inspection. Qualification inspection shall be in accordance with MIL-S-19500.

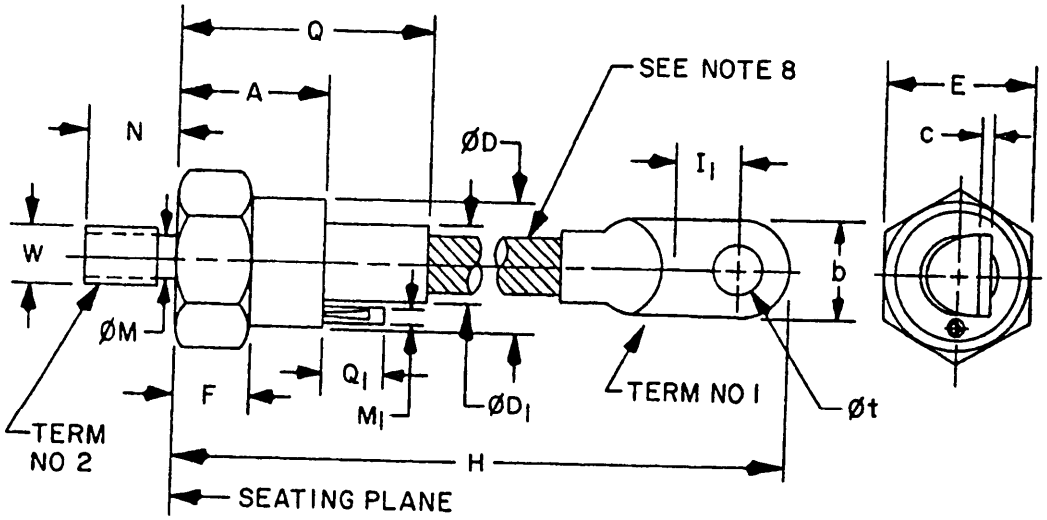

NOTES:

1. Metric equivalents are given for general information only and are based upon 1 inch = 25.4 mm.
2. Complete threads to extend to within 2-1/2 threads of seating plane.
3. 3/4-16 UNF-2A. maximum pitch diameter of plated threads shall be basic pitch diameter (.7094 in., 18.01 mm) ref. (Screw Thread Standards for Federal Services) FED-STD-H28.
4. Angular orientation of terminal and tabulation with respect to hex base is undefined. Square or radius on end of terminal is undefined.
5. A chamfer (or undercut) on one or both ends of hexagonal portions is optional.
6. Tublation optional.
7. Minimum flat.
8. Flexible leads.

Letter	Dimensions				Notes
	Inches		Millimeters		
	Min	Max	Min	Max	
A		1.500		38.10	4
b	.530	.755	13.46	19.18	
c	.063	.172	1.60	4.37	
ØD		1.100		27.94	
$ØD_1$		.600		15.24	
E	1.218	1.250	30.94	31.75	
F	.250	.562	6.35	14.27	5
H	5.125	6.750	130.18	171.45	
I_1	.375		9.53		7
ØM	.660	.670	16.76		2
M_1		.125		3.18	6
N	.793	.828	20.14	21.03	
Q		2.250		57.15	
Q_1		.375		9.53	6
Øt	.265	.350	6.73	8.89	
W					3

FIGURE 1. Physical dimensions for semiconductor devices.

4.3 Screening (JANTX and JANTXV levels only). Screening shall be in accordance with MIL-S-19500 (table II) and as specified herein. The following measurements shall be made in accordance with Table I herein. Devices that exceed the limits of table I shall not be acceptable.

Screen (See table II of MIL-S-19500)	Measurement JANTX AND JANTXV LEVELS
4	2500G; Performed prior to installation of external lead.
10	Not applicable
11	I_{RM1}, and V_{FM}
12	Method 1038, condition A; $V_{RM} = V_{RWM}$ rated (See 1.4), $T_C = 150°C$; f = 60 Hz.
13	Subgroup 2 of table I herein: Δ I_{RM1} = ±0.5 mA(pk) or 100% of initial value whichever is greater. Δ V_{FM} = ±0.1 v(pk).

4.4 Quality conformance inspection. Quality conformance inspection shall be in accordance with MIL-S-19500.

4.4.1 Group A inspection. Group A inspection shall be conducted in accordance with MIL-S-19500 and table I herein. End point electrical measurements shall be in accordance with the applicable steps of table IV herein.

4.4.2 Group B inspection. Group B inspection shall be conducted in accordance with the conditions for subgroup testing in table IVb of MIL-S-19500 and table II herein. Electrical measurements (end points) shall be in accordance with the applicable steps of table IV herein.

4.4.3 Group C inspection. Group C inspection shall be conducted in accordance with the conditions specified for subgroup testing in table V of MIL-S-19500 and table III herein. Electrical measurements (end points) shall be in accordance with the applicable steps of table IV herein.

4.5 Methods of examination and test. Methods of examination and test shall be as specified in the appropriate tables and as follows.

4.5.1 Power cycling. One complete cycle for this test shall be as follows: First, heat the case to the maximum temperature specified, by passing the specified amount of short-circuit forward current through the diode under test. Then, remove the applied current and allow the case temperature to cool to the minimum case temperature specified. No time limit is applicable to any one cycle, but the cycling shall be continuous until the required number of cycles has been completed.

5. PACKAGING

5.1 Packaging requirements. The requirements for packaging shall be in accordance with MIL-S-19500.

6. NOTES

6.1 Notes. The notes specified in MIL-S-19500 are applicable to the specification.

Custodians:
Air Force - 17
Army - ER
Navy - EC

Review activities:
Air Force - 11, 85
Army - AR
Navy - SH

User activities:
Air Force - 14, 19
Army - MI
Navy - CG, MC, WP

Agent.
DLA - ES

Preparing activity:
Army - ER

(Project 5961-0887)

TABLE I. Group A inspection.

Inspection	MIL-STD-750 Method	MIL-STD-750 Conditions	LTPD	Symbol	Limits Min	Limits Max	Unit
Subgroup 1			5				
Visual and mechanical inspection	2071						
Subgroup 2			5				
Forward voltage	4011	Pulse method: I_{FM} =940A(pk); Pulse width = 8.5 ms max. Duty cycle = 2% max.		V_{FM}	---	1.55	v(pk)
Reverse current	4016	AC method:		I_{RM1}			
1N3164		V_{RM} = 200 v(pk)			---	10	mA(pk)
1N3168		V_{RM} = 400 v(pk)			---	10	mA(pk)
1N3170		V_{RM} = 600 v(pk)			---	10	mA(pk)
1N3172		V_{RM} = 800 v(pk)			---	10	mA(pk)
1N3174		V_{RM} = 1000 v(pk)			---	10	mA(pk)
1N3175		V_{RM} = 1200 v(pk)			---	10	mA(pk)
1N3176		V_{RM} = 1400 v(pk)			---	10	mA(pk)
1N3177		V_{RM} = 1600 v(pk)			---	10	mA(pk)
Reverse current at peak reverse voltage:	4016	AC method:		I_{RM2}			
1N3164		V_{RM} = 240 v(pk)			---	50	mA(pk)
1N3168		V_{RM} = 480 v(pk)			---	50	mA(pk)
1N3170		V_{RM} = 720 v(pk)			---	50	mA(pk)
1N3172		V_{RM} = 960 v(pk)			---	50	mA(pk)
1N3174		V_{RM} = 1200 v(pk)			---	50	mA(pk)
1N3175		V_{RM} = 1440 v(pk)			---	50	mA(pk)
1N3176		V_{RM} = 1680 v(pk)			---	50	mA(pk)
1N3177		V_{RM} = 1920 v(pk)			---	50	mA(pk)
Subgroup 3			5				
High temperature operation:		T_C = 175°C					
Reverse current	4016	AC method		I_{RM3}			
1N3164		V_{RM} = 200 v(pk)			---	30	mA(pk)
1N3168		V_{RM} = 400 v(pk)			---	30	mA(pk)
1N3170		V_{RM} = 600 v(pk)			---	30	mA(pk)
1N3172		V_{RM} = 800 v(pk)			---	30	mA(pk)
1N3174		V_{RM} = 1000 v(pk)			---	30	mA(pk)
1N3175		V_{RM} = 1200 v(pk)			---	30	mA(pk)
1N3176		V_{RM} = 1400 v(pk)			---	30	mA(pk)
1N3177		V_{RM} = 1600 v(pk)			---	30	mA(pk)
Low temperature operation:		T_C = -65°C					
Reverse current	4016	AC method		I_{RM4}			
1N3164		V_{RM} = 200 v(pk)			---	50	mA(pk)
1N3168		V_{RM} = 400 v(pk)			---	50	mA(pk)
1N3170		V_{RM} = 600 v(pk)			---	50	mA(pk)
1N3172		V_{RM} = 800 v(pk)			---	50	mA(pk)

TABLE I. Group A inspection - Continued.

Inspection	MIL-STD-750 Method	MIL-STD-750 Conditions	LTPD	Symbol	Limits Min	Limits Max	Unit
1N3174		V_{RM} = 1000 v(pk)			---	50	mA(pk)
1N3175		V_{RM} = 1200 v(pk)			---	50	mA(pk)
1N3176		V_{RM} = 1400 v(pk)			---	50	mA(pk)
1N3177		V_{RM} = 1600 v(pk)			---	50	mA(pk)
Subgroup 4							
Not applicable							
Subgroup 5							
Not applicable							
Subgroup 6			10				
Surge current	4066	T_C = 150°C; I_{FMS} = 6250 a(pk) I_O =200 A dc; 10 1/120s surges; 1 surge/minute; V_{RM} = V_{RWM} (see 1.4)					
Endpoint electrical measurements		See table IV, steps 1 and 2					
Subgroup 7							
Not applicable							

TABLE II. Group B inspection.

Inspection	MIL-STD-750		
	Method	Conditions	LTPD
Subgroup 1			15
Resistance to solvents	1022		
Subgroup 2			10
Thermal shock (temperature cycling)	1051		
Hermetic seal	1071		
Fine leak			
Gross leak			
Electrical measurements		See table IV, steps 1 and 2	
Subgroup 3			10
Blocking life	---	T_C = 200°C; V_{RM} = V_{RWM} (See 1.4); I_O = 0; half-sine wave, f = 60 Hz	
Electrical measurements		See table IV, steps 1 and 2	
Subgroup 4			
Decap-internal visual (design verification)	2075		1 device/0 failure for each lot
Subgroup 5			20
Thermal resistance	3151	$R_{\theta JC}$ = 0.15 °C/W	
Subgroup 6			10
High temperature life (non-operating)	1032	T_A = 200°C	
Electrical measurements		See table IV, steps 1 and 2	
Subgroup 7			20
Power cycling		See 4.5.1: I_O = 200 A dc; T_C (low) = 50 +0°C,-15°C T_C (high) = 150 +5°C,-0°C 5,000 cycles	
Electrical measurements		See table IV, steps 1, 2, and 3	

TABLE III. Group C inspection.

Inspection	Method	MIL-STD-750 Conditions	LTPD
Subgroup 1			15
Physical dimensions	2066	See figure 1	
Subgroup 2			15
Thermal shock (glass strain)	1056	Test condition B	
Terminal strength Tension (lead)	2036	Test condition A; Weight = 100 lb; t = 15 ± 3 s	
Bending stress (lead)		Test condition F; Weight = 10 lb; t = 15 ± 3 s	
Stud torque		Test condition D2 Torque = 325 lb in.; t = 15 ± 3 s	
Hermetic seal	1071		
Gross leak only			
Moisture resistance	1021		
External visual	2071		
Electrical measurements		See table IV, steps 1 and 2	
Subgroup 3		Tests may be performed on devices prior to the installation of the external lead or with the external lead removed.	15
Shock	2016	500Gs	
Vibration, variable frequency	2056		
Constant acceleration		2500G; X_1, Y_1, and Y_2 orientations	
Electrical measurements		See table IV, steps 1 and 2	
Subgroup 4			15
Salt atmosphere (corrosion)	1041		

TABLE III. Group C inspection - Continued.

Inspection	Method	MIL-STD-750 Conditions	LTPD
Subgroup 5			15
Barometric pressure (reduced)	1001		
1N3168, 1N3170		Pressure = 8mm Hg	
1N3172, 1N3174		Pressure = 15mm Hg	
1N3175, 1N3176		Pressure = 33mm Hg	
1N3177		Pressure = 54mm Hg	
Measurement during test		See table IV, step 2	
Subgroup 6			
Blocking life	---	T_C = 200°C; V_{RM} = V_{RWM} (See 1.4)	λ = 10
		I_O = 0; half sine wave, f = 60 Hz	
Electrical measurements		See table IV, steps 1 and 2	

TABLE IV. Groups B, and C, endpoint electrical measurements.

Step	Inspection	Method	MIL-STD-750 Conditions	Symbol	Limits Min	Limits Max	Unit
1.	Forward voltage	4011	Pulse method: I_{FM} = 940 A(pk) Pulse width = 8.5 ms max Duty cycle = 2% max	V_{FM}	---	1.55	v(pk)
2.	Reverse current	4016	AC method:	I_{RM1}			
	1N3164		V_{RM} = 200 V(pk)		---	10	mA(pk)
	1N3168		V_{RM} = 400 V(pk)		---	10	mA(pk)
	1N3170		V_{RM} = 600 V(pk)		---	10	mA(pk)
	1N3172		V_{RM} = 800 V(pk)		---	10	mA(pk)
	1N3174		V_{RM} = 1000 V(pk)		---	10	mA(pk)
	1N3175		V_{RM} = 1200 V(pk)		---	10	mA(pk)
	1N3176		V_{RM} = 1400 V(pk)		---	10	mA(pk)
	1N3177		V_{RM} = 1600 V(pk)		---	10	mA(pk)
3.	Forward voltage	4011	I_{FM} = 940 A(pk)	ΔV_{FM}	---	+0.1	v(pk)

INSTRUCTIONS: In a continuing effort to make our standardization documents better, the DoD provides this form for use in submitting comments and suggestions for improvements. All users of military standardization documents are invited to provide suggestions. This form may be detached, folded along the lines indicated, taped along the loose edge *(DO NOT STAPLE)*, and mailed. In block 5, be as specific as possible about particular problem areas such as wording which required interpretation, was too rigid, restrictive, loose, ambiguous, or was incompatible, and give proposed wording changes which would alleviate the problems. Enter in block 6 any remarks not related to a specific paragraph of the document. If block 7 is filled out, an acknowledgement will be mailed to you within 30 days to let you know that your comments were received and are being considered.

NOTE: This form may not be used to request copies of documents, nor to request waivers, deviations, or clarification of specification requirements on current contracts. Comments submitted on this form do not constitute or imply authorization to waive any portion of the referenced document*(s)* or to amend contractual requirements.

(Fold along this line)

(Fold along this line)

DEPARTMENT OF THE ARMY

NO POSTAGE NECESSARY IF MAILED IN THE UNITED STATES

OFFICIAL BUSINESS
PENALTY FOR PRIVATE USE $300

BUSINESS REPLY MAIL
FIRST CLASS PERMIT NO. 12062 WASHINGTON D. C.
POSTAGE WILL BE PAID BY THE DEPARTMENT OF THE ARMY

Commander
US Army Electronics Research & Development
Command
ATTN: DRDEL-ED
Adelphi, MD 20783

(TO DETACH THIS FORM, CUT ALONG THIS LINE.)

STANDARDIZATION DOCUMENT IMPROVEMENT PROPOSAL

(See Instructions – Reverse Side)

1. DOCUMENT NUMBER

2. DOCUMENT TITLE

3a. NAME OF SUBMITTING ORGANIZATION

4. TYPE OF ORGANIZATION *(Mark one)*

- ☐ VENDOR
- ☐ USER
- ☐ MANUFACTURER
- ☐ OTHER *(Specify)*: _____

b. ADDRESS *(Street, City, State, ZIP Code)*

5. PROBLEM AREAS

a. Paragraph Number and Wording:

b. Recommended Wording:

c. Reason/Rationale for Recommendation:

6. REMARKS

7a. NAME OF SUBMITTER *(Last, First, MI)* – Optional

b. WORK TELEPHONE NUMBER *(Include Area Code)* – Optional

c. MAILING ADDRESS *(Street, City, State, ZIP Code)* – Optional

8. DATE OF SUBMISSION *(YYMMDD)*

DD FORM 82 MAR 1426

PREVIOUS EDITION IS OBSOLETE.