INCH-POUND

MIL-PRF-22710/14F
20 April 2001

SUPERSEDING
MIL-S-22710/14E
18 October 1982

PERFORMANCE SPECIFICATION SHEET

SWITCHES, CODE INDICATING WHEEL (PRINTED CIRCUIT), (THUMBWHEEEL SWITCH ASSEMBLY, INTEGRAL BEZEL, NON-SEALED, NON-ILLUMINATED) STYLE SRPC14

This specification is approved for use by all Departments and Agencies of the Department of Defense.

The requirements for acquiring the product described herein shall consist of this specification sheet and the issue of MIL-PRF-22710 listed in that issue of the Department of Defense Index of Specifications and Standards (DODISS) specified in the solicitation.

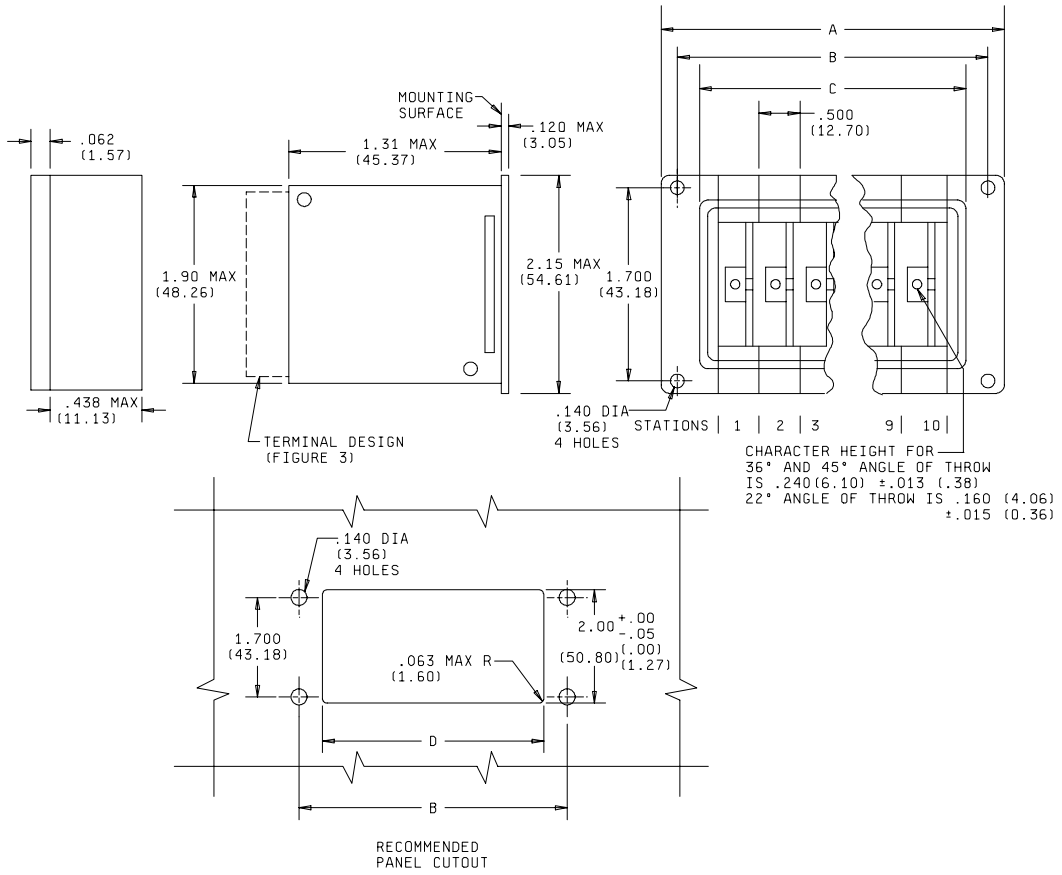

RECOMMENDED PANEL CUTOUT

FIGURE 1. Style SRPC14 switch and panel cutout (unshielded switch)

DISTRIBUTION STATEMENT A. Approved for public release; distribution is unlimited.

Number of stations	Dimensions			
	A (MAX)	B	C ± .03	D -.00 +.03
1	1.40 (35.56)	0.98 (24.89)	0.70 (17.79)	0.74 (18.80)
2	1.90 (48.26)	1.48 (37.59)	1.20 (30.48)	1.24 (31.50)
3	2.40 (76.20)	1.98 (50.29)	1.70 (43.18)	1.74 (44.20)
4	2.90 (60.96)	2.48 (62.99)	2.20 (55.88)	2.24 (56.90)
5	3.40 (73.66)	2.98 (75.69)	2.70 (68.58)	2.74 (69.60)
6	3.90 (99.06)	3.48 (88.39)	3.20 (81.28)	3.24 (82.30)
7	4.40 (111.76)	3.98 (101.09)	3.70 (93.98)	3.74 (95.00)
8	4.90 (124.46)	4.48 (113.79)	4.20 (106.68)	4.24 (107.70)
9	5.40 (137.16)	4.98 (126.49)	4.70 (119.38)	4.74 (120.40)
10	5.90 (149.86)	5.48 (139.19)	5.20 (132.08)	5.24 (133.10)

NOTES:
1. Dimensions are in inches.
2. Millimeters are in parentheses.
3. Metric equivalents are given for general information only and are based upon 1 inch = 25.4 mm.
4. Unless otherwise specified, tolerance is ± 0.010 (0.25).
5. The conducting part of the terminal shall extend tot he end of the printed circuit board to insure connector compatibility.

FIGURE 1. Style SRPC14 switch and panel cutout (unshielded switch) - Continued.

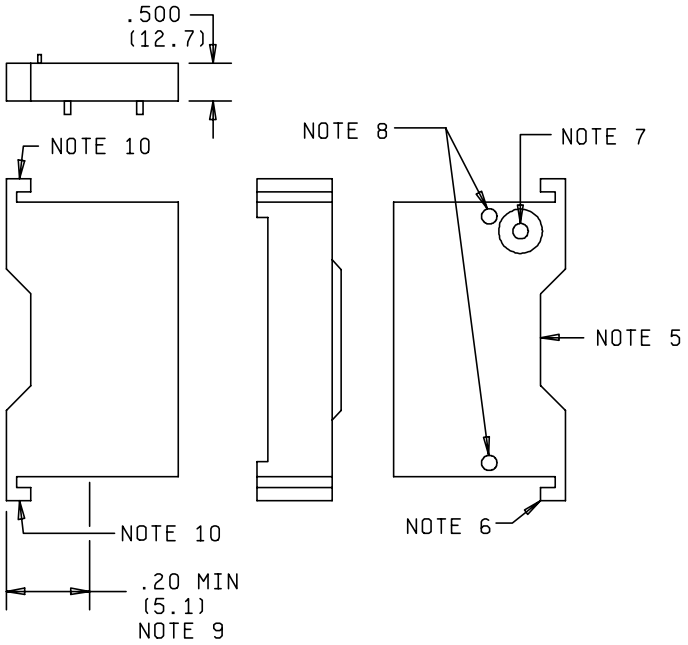

Number of stations	Dimensions			
	A (MAX)	B	C ± .03	D -.00 +.03
1	1.40 (35.56)	0.984 (24.99)	0.70 (17.79)	0.75 (19.10)
2	1.90 (48.26)	1.486 (37.74)	1.20 (30.48)	1.25 (31.80)
3	2.40 (76.20)	1.988 (50.50)	1.70 (43.18)	1.75 (44.50)
4	2.90 (60.96)	2.490 (63.25)	2.20 (55.88)	2.25 (57.20)
5	3.40 (73.66)	2.992 (76.00)	2.70 (68.58)	2.76 (70.10)
6	3.90 (99.06)	3.94 (88.75)	3.20 (81.28)	3.26 (82.80)
7	4.40 (111.76)	3.996 (101.50)	3.70 (93.98)	3.76 (95.50)
8	4.90 (124.46)	4.498 (114.25)	4.20 (106.68)	4.26 (108.20)
9	5.40 (137.16)	5.000 (127.00)	4.70 (119.38)	4.76 (120.90)
10	5.90 (149.86)	5.502 (139.75)	5.20 (132.08)	5.26 (133.60)

NOTES:
1. Dimensions are in inches.
2. Metric equivalents are in parentheses.
3. Metric equivalents are given for general information only and are base upon 1 inch = 25.4 mm.
4. Unless otherwise specified, tolerance it ± .101 (.25 mm).
5. Black matte finish over silver - for all surfaces exposed from front of panel.
6. No color coating to be applied over silver in this area (2 places).
7. No paint .25/.35 diameter.
8. .049 ± .002 DIA, drilled out holes.
9. Minimum silvered surface, measured from front of switch.
10. Panel cutout dimensions shown in table

FIGURE 2. RFI Shielded switch and panel cut-out

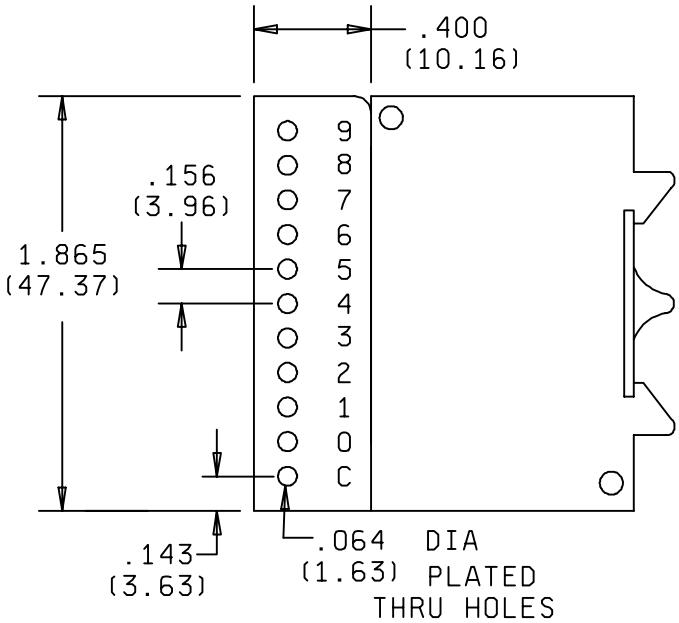

MODULE A or A1

TRUTH TABLE (Circuit configuration1) 36° INDEXING	
DIAL MARKING	COMMON C CONN. TO:
0	0
1	1
2	2
3	3
4	4
5	5
6	6
7	7
8	8
9	9

FIGURE 3. Module and circuit configuration.

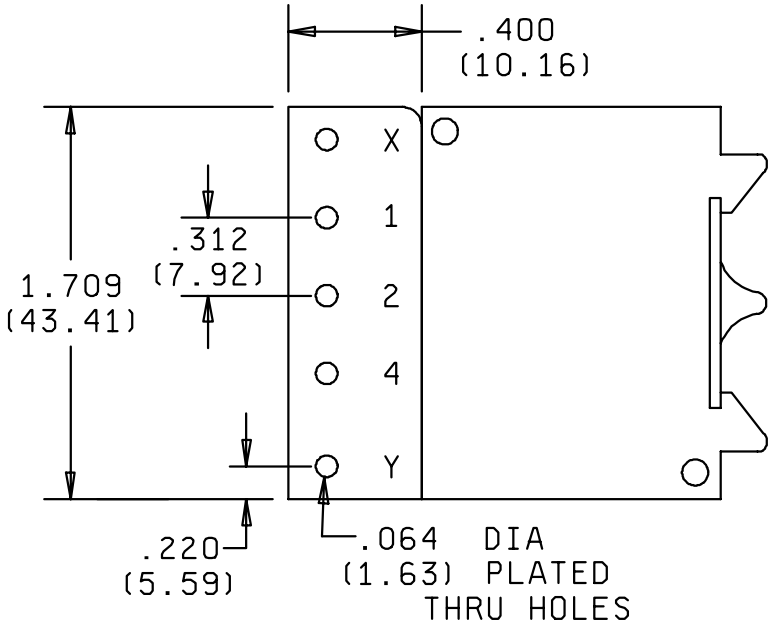

MODULE B or B1

TRUTH TABLE (Circuit configuration2) 45° INDEXING			
DIAL MARKING	COMMON X (•) Y(o) CONN. TO:		
	1	2	4
O	o	o	o
1	•	o	o
2	o	•	o
3	•	•	o
4	o	o	•
5	•	o	•
6	o	•	•
7	•	•	•

FIGURE 3. Module and circuit configuration - Continued

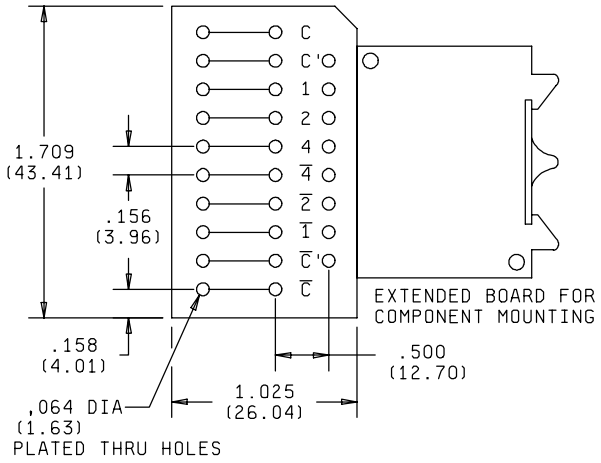

MODULE C OR C1

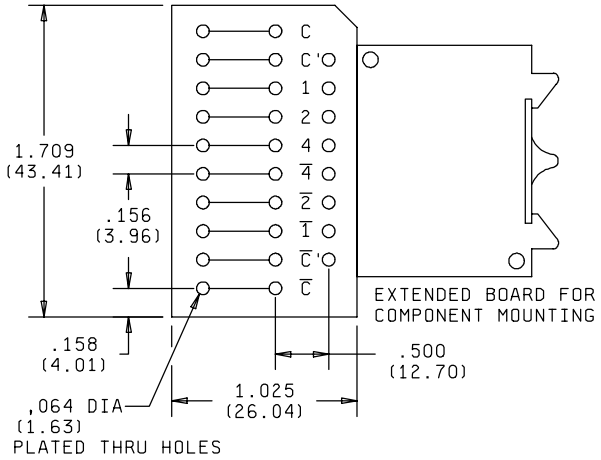

MODULE D OR D1

TRUTH TABLE (Circuit Configuration 3) 45° INDEXING						
DIAL MARKING	COMMON C CONN. TO:			COMMON $\overline{C}$ CONN. TO:		
	1	2	4	1	$\overline{2}$	$\overline{4}$
0				•	•	•
1	•				•	•
2		•		•		•
3	•	•				•
4			•	•	•	
5	•		•		•	
6		•	•	•		
7	•	•	•			

FIGURE 3. Module and circuit configuration - Continued

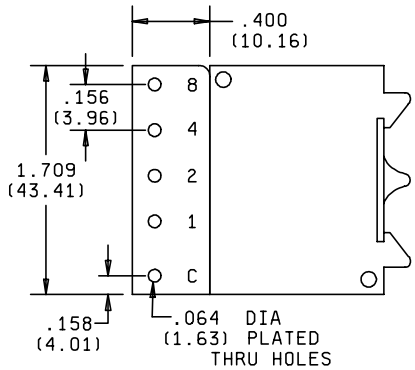

MODULE E OR E1

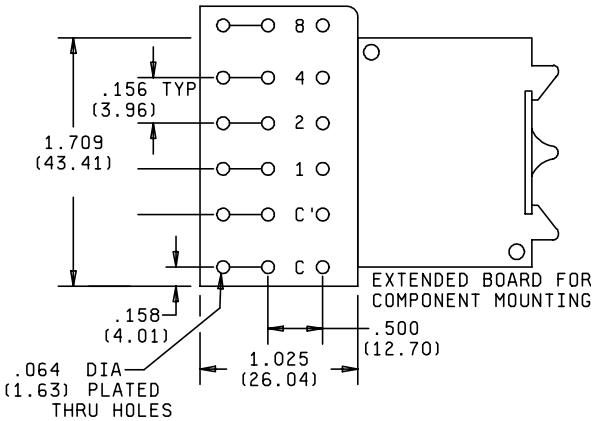

MODULE F OR F1

TRUTH TABLE Circuit configuration 4 36° INDEXING				
DIAL MARKING	COMMON C CONN. TO:			
	1	2	4	8
0				
1	•			
2		•		
3	•	•		
4			•	
5	•		•	
6		•	•	
7	•	•	•	
8				•
9	•			•

FIGURE 3. Module and circuit configuration - Continued

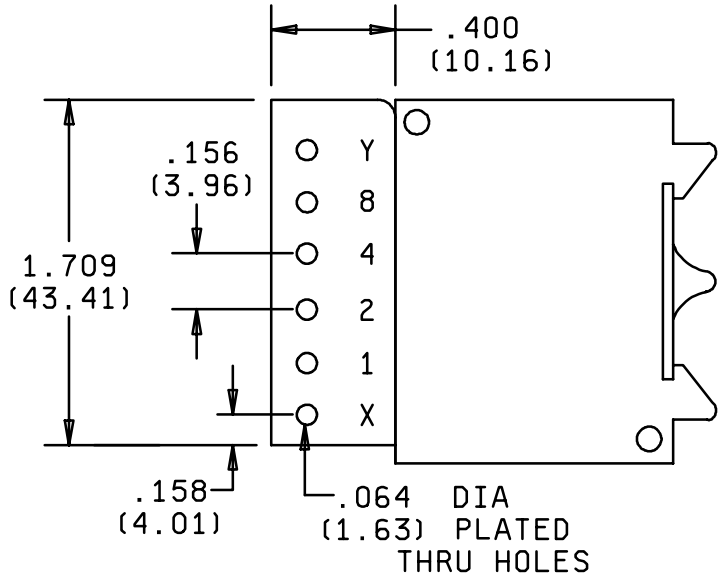

MODULE G or G1

TRUTH TABLE Circuit configuration 5 36° INDEXING				
DIAL MARKING	COMMON X(•) & Y(o) CONN. TO:			
	1	2	4	8
0	o	o	o	o
1	•	o	o	o
2	o	•	o	o
3	•	•	o	o
4	o	o	•	o
5	•	o	•	o
6	o	•	•	o
7	•	•	•	o
8	o	o	o	•
9	•	o	o	•

FIGURE 3. Module and circuit configuration - Continued

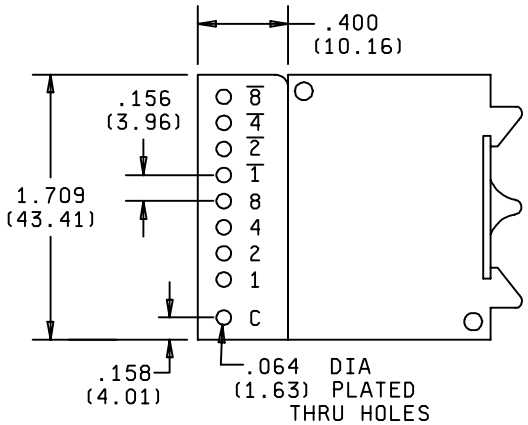

MODULE H OR H1

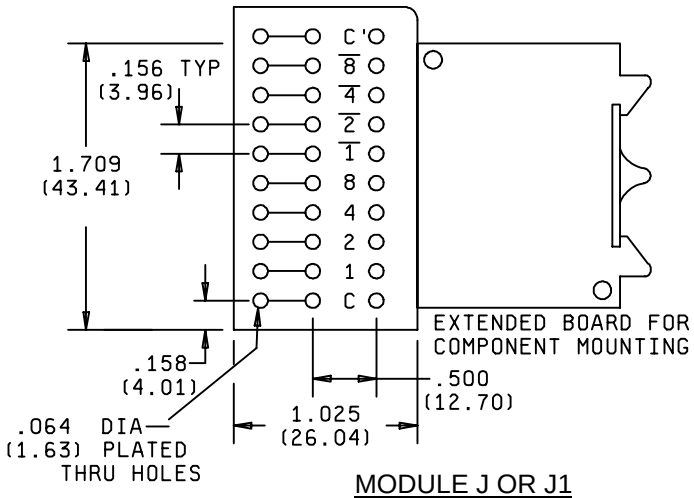

MODULE J OR J1

TRUTH TABLE (Circuit configuration 6) 36° INDEXING								
DIAL MARKING	COMMON C CONN. TO:							
	1	2	4	8	$\overline{1}$	$\overline{2}$	$\overline{4}$	$\overline{8}$
0					•	•	•	•
1	•					•	•	•
2		•			•		•	•
3	•	•					•	•
4			•		•	•		•
5	•		•			•		•
6		•	•		•			•
7	•	•	•					•
8				•	•	•	•	
9	•			•		•	•	

NOTES:
1. Dimensions are in inches.
2. Metric equivalents are in parentheses.
3. Metric equivalents are given for general information only and are based upon 1 inch = 2.54 mm.
4. Where specified, C' is common to C and is used for component mounting.

FIGURE 3. Module and circuit configuration - Continued.

TABLE I. Module description. 1/

Module number	Circuit Configuration	Dial		EMI/RFI shielded
		Background	Marking	
A A1	1	Black Opaque	White Opaque	No Yes
B B1	2	”	White Opaque	No Yes
C C1	3	”	White Opaque	No Yes
D D1	3	”	White Opaque	No Yes
E E1	4	"	White Opaque	No Yes
F F1	4	”	White Opaque	No Yes
G G1	5	”	White Opaque	No Yes
H H1	6	”	White Opaque	No Yes
J J1	6	”	White Opaque	No Yes

1/ Switch modules are not procurable by themselves, but are part of the switch assembly. See Table II.

TABLE II. Switch assembly

Part Number M22710/14-	Switch station module number									
	1	2	3	4	5	6	7	8	9	10
001	A									
002	A	A								
003	A	A	A							
004	A	A	A	A						
005	A	A	A	A	A					
006	A	A	A	A	A	A				
007	A	A	A	A	A	A	A			
008	A	A	A	A	A	A	A	A		
009	A	A	A	A	A	A	A	A	A	
010	A	A	A	A	A	A	A	A	A	A
011	B									
012	B	B								
013	B	B	B							
014	B	B	B	B						
015	B	B	B	B	B					
016	B	B	B	B	B	B				
017	B	B	B	B	B	B	B			
018	B	B	B	B	B	B	B	B		
019	B	B	B	B	B	B	B	B	B	
020	B	B	B	B	B	B	B	B	B	B

TABLE II. Switch assembly - Continued.

Part Number M22710/14-	Switch station module number									
	1	2	3	4	5	6	7	8	9	10
021	C									
022	C	C								
023	C	C	C							
024	C	C	C	C						
025	C	C	C	C	C					
026	C	C	C	C	C	C				
027	C	C	C	C	C	C	C			
028	C	C	C	C	C	C	C	C		
029	C	C	C	C	C	C	C	C	C	
030	C	C	C	C	C	C	C	C	C	C
031	D									
032	D	D								
033	D	D	D							
034	D	D	D	D						
035	D	D	D	D	D					
036	D	D	D	D	D	D				
037	D	D	D	D	D	D	D			
038	D	D	D	D	D	D	D	D		
039	D	D	D	D	D	D	D	D	D	
040	D	D	D	D	D	D	D	D	D	D
041	E									
042	E	E								
043	E	E	E							
044	E	E	E	E						
045	E	E	E	E	E					
046	E	E	E	E	E	E				
047	E	E	E	E	E	E	E			
048	E	E	E	E	E	E	E	E		
049	E	E	E	E	E	E	E	E	E	
050	E	E	E	E	E	E	E	E	E	E
051	F									
052	F	F								
053	F	F	F							
054	F	F	F	F						
055	F	F	F	F	F					
056	F	F	F	F	F	F				
057	F	F	F	F	F	F	F			
058	F	F	F	F	F	F	F	F		
059	F	F	F	F	F	F	F	F	F	
060	F	F	F	F	F	F	F	F	F	F
061	G									
062	G	G								
063	G	G	G							
064	G	G	G	G						
065	G	G	G	G	G					
066	G	G	G	G	G	G				
067	G	G	G	G	G	G	G			
068	G	G	G	G	G	G	G	G		
069	G	G	G	G	G	G	G	G	G	
070	G	G	G	G	G	G	G	G	G	G

TABLE II. Switch assembly - Continued.

Part Number M22710/14-	Switch station module number									
	1	2	3	4	5	6	7	8	9	10
071	H									
072	H	H								
073	H	H	H							
074	H	H	H	H						
075	H	H	H	H	H					
076	H	H	H	H	H	H				
077	H	H	H	H	H	H	H			
078	H	H	H	H	H	H	H	H		
079	H	H	H	H	H	H	H	H	H	
080	H	H	H	H	H	H	H	H	H	H
081	J									
082	J	J								
083	J	J	J							
084	J	J	J	J						
085	J	J	J	J	J					
086	J	J	J	J	J	J				
087	J	J	J	J	J	J	J			
088	J	J	J	J	J	J	J	J		
089	J	J	J	J	J	J	J	J	J	
090	J	J	J	J	J	J	J	J	J	J
091	A1									
092	A1	A1								
093	A1	A1	A1							
094	A1	A1	A1	A1						
095	A1	A1	A1	A1	A1					
096	A1	A1	A1	A1	A1	A1				
097	A1	A1	A1	A1	A1	A1	A1			
098	A1	A1	A1	A1	A1	A1	A1	A1		
099	A1	A1	A1	A1	A1	A1	A1	A1	A1	
100	A1	A1	A1	A1	A1	A1	A1	A1	A1	A1
101	B1									
102	B1	B1								
103	B1	B1	B1							
104	B1	B1	B1	B1						
105	B1	B1	B1	B1	B1					
106	B1	B1	B1	B1	B1	B1				
107	B1	B1	B1	B1	B1	B1	B1			
108	B1	B1	B1	B1	B1	B1	B1	B1		
109	B1	B1	B1	B1	B1	B1	B1	B1	B1	
110	B1	B1	B1	B1	B1	B1	B1	B1	B1	B1
111	C1									
112	C1	C1								
113	C1	C1	C1							
114	C1	C1	C1	C1						
115	C1	C1	C1	C1	C1					
116	C1	C1	C1	C1	C1	C1				
117	C1	C1	C1	C1	C1	C1	C1			
118	C1	C1	C1	C1	C1	C1	C1	C1		
119	C1	C1	C1	C1	C1	C1	C1	C1	C1	
120	C1	C1	C1	C1	C1	C1	C1	C1	C1	C1

TABLE II. Switch assembly - Continued.

Part Number M22710/14-	Switch station module number									
	1	2	3	4	5	6	7	8	9	10
121	D1									
122	D1	D1								
123	D1	D1	D1							
124	D1	D1	D1	D1						
125	D1	D1	D1	D1	D1					
126	D1	D1	D1	D1	D1	D1				
127	D1	D1	D1	D1	D1	D1	D1			
128	D1	D1	D1	D1	D1	D1	D1	D1		
129	D1	D1	D1	D1	D1	D1	D1	D1	D1	
130	D1	D1	D1	D1	D1	D1	D1	D1	D1	D1
131	E1									
132	E1	E1								
133	E1	E1	E1							
134	E1	E1	E1	E1						
135	E1	E1	E1	E1	E1					
136	E1	E1	E1	E1	E1	E1				
137	E1	E1	E1	E1	E1	E1	E1			
138	E1	E1	E1	E1	E1	E1	E1	E1		
139	E1	E1	E1	E1	E1	E1	E1	E1	E1	
140	E1	E1	E1	E1	E1	E1	E1	E1	E1	E1
141	F1									
142	F1	F1								
143	F1	F1	F1							
144	F1	F1	F1	F1						
145	F1	F1	F1	F1	F1					
146	F1	F1	F1	F1	F1	F1				
147	F1	F1	F1	F1	F1	F1	F1			
148	F1	F1	F1	F1	F1	F1	F1	F1		
149	F1	F1	F1	F1	F1	F1	F1	F1	F1	
150	F1	F1	F1	F1	F1	F1	F1	F1	F1	F1
151	G1									
152	G1	G1								
153	G1	G1	G1							
154	G1	G1	G1	G1						
155	G1	G1	G1	G1	G1					
156	G1	G1	G1	G1	G1	G1				
157	G1	G1	G1	G1	G1	G1	G1			
158	G1	G1	G1	G1	G1	G1	G1	G1		
159	G1	G1	G1	G1	G1	G1	G1	G1	G1	
160	G1	G1	G1	G1	G1	G1	G1	G1	G1	G1

TABLE II. Switch assembly - Continued.

Part Number M22710/14-	Switch station module number									
	1	2	3	4	5	6	7	8	9	10
161	H1									
162	H1	H1								
163	H1	H1	H1							
164	H1	H1	H1	H1						
165	H1	H1	H1	H1	H1					
166	H1	H1	H1	H1	H1	H1				
167	H1	H1	H1	H1	H1	H1	H1			
168	H1	H1	H1	H1	H1	H1	H1	H1		
169	H1	H1	H1	H1	H1	H1	H1	H1	H1	
170	H1	H1	H1	H1	H1	H1	H1	H1	H1	H1
171	J1									
172	J1	J1								
173	J1	J1	J1							
174	J1	J1	J1	J1						
175	J1	J1	J1	J1	J1					
176	J1	J1	J1	J1	J1	J1				
177	J1	J1	J1	J1	J1	J1	J1			
178	J1	J1	J1	J1	J1	J1	J1	J1		
179	J1	J1	J1	J1	J1	J1	J1	J1	J1	
180	J1	J1	J1	J1	J1	J1	J1	J1	J1	J1

REQUIREMENTS:

Dimensions and configuration: See figures 1, 2, and 3.

Construction: D.

Indexing: 36 or 45 degrees. See truth tables in figure 3.

Vibration grade: 3 (15g, 10 - 2,000 Hz).

Shock type: M(100g). Method I of MIL-PRF-22710.

Altitude rating: 0 (under 10,000 feet).

Terminal design: See figure 3.

Connector compatibility: MIL-C-21097.

Temperature-life characteristic: B.

EMI/RFI shielding: Applicable, where specified.

Moisture resistance; Method II of MIL-PRF-22710.

Operating force (tangential): 5 ounces minimum, 22 ounces maximum.

Explosion: Applicable.

Life (rotational): Method 206, test condition G, MIL-STD-202 (see table IV).

TABLE IV. Electrical test load.

Test or condition	Resistive	
At atmospheric pressure	0.125 Ampere	28 V dc
Life (low level)	10 mA	30 mV

Military part number: See tables I and II.

Caution: Isopropyl alcohol recommended for cleaning and solder-flux removal. Avoid the use of acids, ammonia, chlorinated or aromatic hydrocarbons, and oxygenated solvents.

Custodians:
Army - CR
Navy- EC
Air Force - 11
DLA - CC

Review activities:
Army - CR4, MI, SM
Navy - AS, MC, OS
Air Force - 99

Preparing activity:
DLA - CC

(Project 5930-1724-03)