INCH-POUND

MIL-PRF-22710/23D
20 April 2001

SUPERSEDING
MIL-S-22710/23C
30 September 1986

PERFORMANCE SPECIFICATION SHEET

SWITCHES, CODE INDICATING WHEEL (PRINTED CIRCUIT), (PUSHBUTTON, UNIDIRECTIONAL, SEALED OR UNSEALED, ILLUMINATED) (SIDE RELAMPABLE) OR NON ILLUMINATED, STYLE SRPC23

This specification is approved for use by all Departments and Agencies of the Department of Defense.

The requirements for acquiring the product described herein shall consist of this specification sheet and the issue of MIL-PRF-22710 listed in that issue of the Department of Defense Index of Specifications and Standards (DODISS) specified in the solicitation.

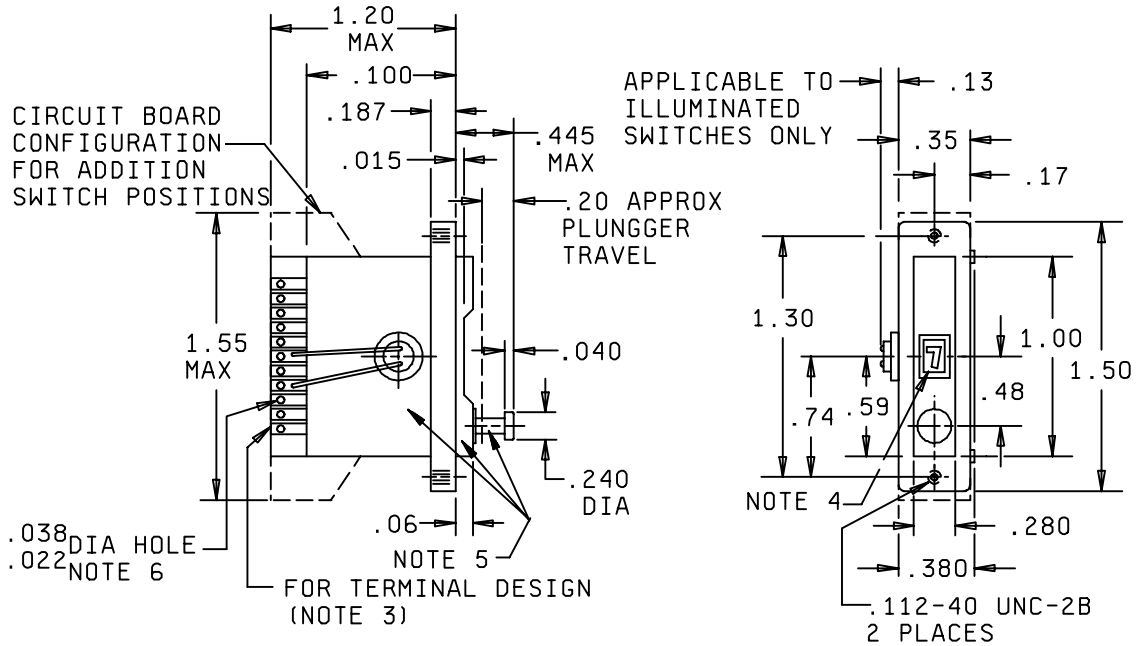

Inch	mm	Inch	mm	Inch	mm	Inch	mm	Inch	mm	Inch	mm
0.02	0.38	0.06	1.52	0.19	4.75	0.35	8.89	0.59	14.99	1.30	33.02
0.03	0.66	0.10	2.54	0.20	5.08	0.38	9.65	0.74	18.80	1.50	38.10
0.04	0.97	0.13	3.30	0.24	6.10	0.45	11.30	1.00	25.40	1.55	39.37
		0.17	4.32	0.25	6.35	0.48	12.19	1.20	30.48		

NOTES
1. Dimensions are in inches. Metric equivalents are for general information only.
2. Unless otherwise specified, tolerances are ±.02 (.51 mm) for two places decimals and ±.010 (.25mm) for three place decimals.
3. Character height is .156 (3.96 mm).
4. Housing, mounting flange and actuator are metal.
5. This size hole will accommodate one AWG wire 122.

FIGURE 1. Switch assembly.

DISTRIBUTION STATEMENT A. Approved for public release; distribution is unlimited.

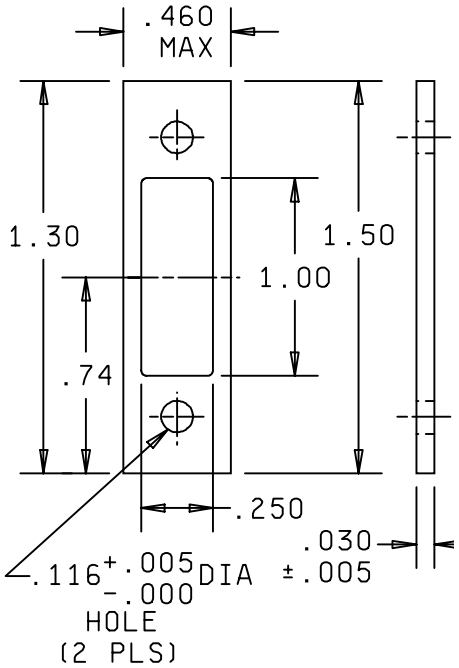

Inch	mm
.005	0.13
.030	0.76
.116	2.95
.250	6.35
.460	11.68
.740	18.80
1.00	25.40
1.30	33.00
1.50	38.10

NOTES
1. Dimensions are in inches. Metric equivalents are for general information only.
2. Unless otherwise specified, tolerances are ± .02 (.51 mm) for two places decimals and ± .010 (.25mm) for three place decimals.
3. When panel seal is specified (see table I), the material shall be chosen to meet the performance requirements of this specification.

FIGURE 2 Panel seal gasket.

No. 1

DIAL READS	COMMON C CONNECTED TO TERMINALS							
	0	1	2	3	4	5	6	7
0	•							
1		•						
2			•					
3				•				
4					•			
5						•		
6							•	
7								•

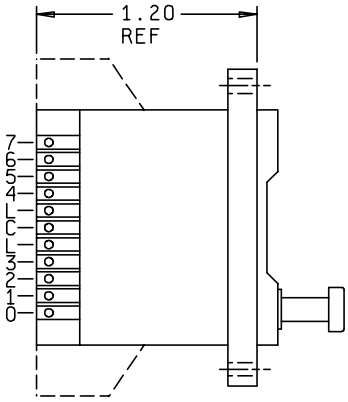

No. 2

DIAL READS	COMMON C CONNECTED TO TERMINALS		
	1	2	4
0			
1	•		
2		•	
3	•	•	
4			•
5	•		•
6		•	•
7	•	•	•

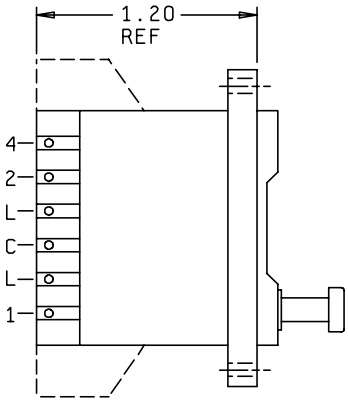

No. 3

DIAL READS	COMMON C CONNECTED TO TERMINAL			
	0	1	2	4
0	•			
1		•		
2			•	
3		•	•	
4				•
5		•		•
6			•	•
7		•	•	•

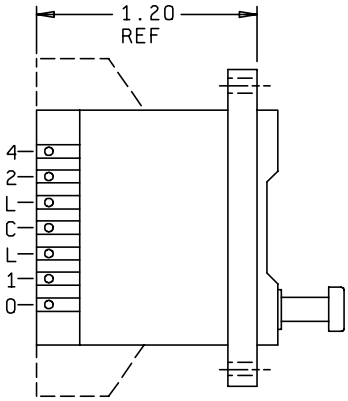

FIGURE 3. Terminal design and configuration.

No. 4

DIAL READS	COMMON C CONNECTED TO TERMINAL									
	0	1	2	3	4	5	6	7	8	9
0	•									
1		•								
2			•							
3				•						
4					•					
5						•				
6							•			
7								•		
8									•	
9										•

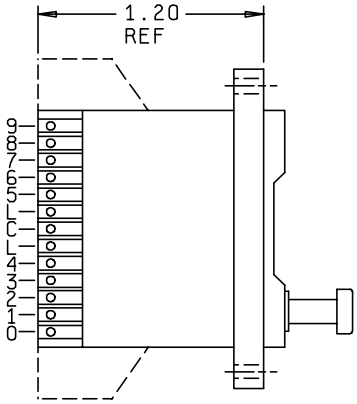

No. 5

DIAL READS	COMMON C CONNECTED TO TERMINAL			
	1	2	4	8
0				
1	•			
2		•		
3	•	•		
4			•	
5	•		•	
6		•	•	
7	•	•	•	
8				•
9	•			•

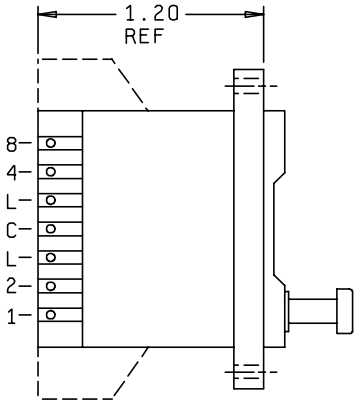

No. 6

DIAL READS	COMMON C CONNECTED TO TERMINAL				
	1	2	4	8	P
0					•
1	•				
2		•			
3	•	•			•
4			•		
5	•		•		•
6		•	•		•
7	•	•	•		
8				•	
9	•			•	•

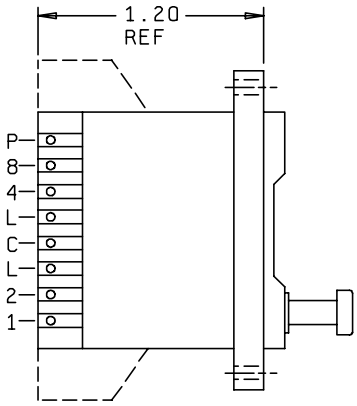

FIGURE 3. Terminal design and configuration - Continued.

No. 7

DIAL READS	COMMON C CONNECTED TO TERMINAL			
	1	2	4	8
0	•	•		
1			•	
2	•		•	
3		•	•	
4	•	•	•	
5				•
6	•			•
7		•		•
8	•	•		•
9			•	•

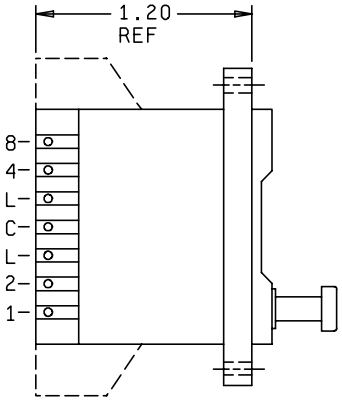

No. 8

DIAL READS	COMMON C CONNECTED TO TERMINAL							
	1	2	4	8	1	2	4	8
0					•	•	•	•
1	•					•	•	•
2		•			•		•	•
3	•	•					•	•
4			•		•	•		•
5	•		•			•		•
6		•	•		•			•
7	•	•	•					•
8				•	•	•	•	
9	•			•		•	•	

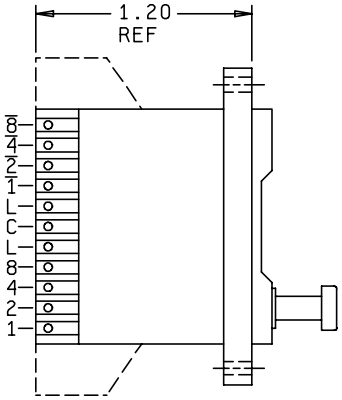

No. 9

	COMMON C CONNECTED TO TERMINAL											
	0	1	2	3	4	5	6	7	8	9	10	11
0	•											
1		•										
2			•									
3				•								
4					•							
5						•						
6							•					
7								•				
8									•			
9										•		
10											•	
11												•

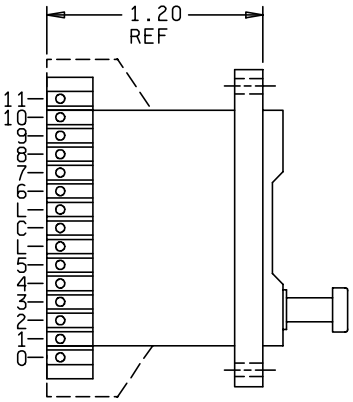

FIGURE 3. Terminal design and configuration - Continued.

No. 10

	COMMON C CONNECTED TO TERMINAL			
	1	2	4	8
0				
1	•			
2		•		
3	•	•		
4			•	
5	•		•	
6		•	•	
7	•	•	•	
8				•
9	•			•
10		•		•
11	•	•		•

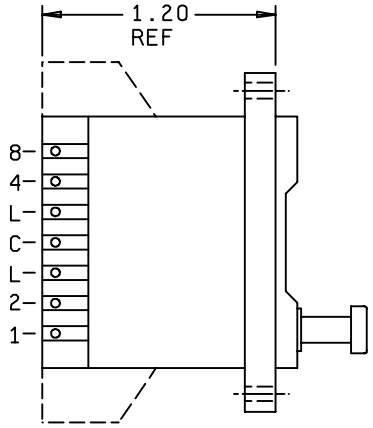

No. 11 2 POLE

	COMMON C CONNECTED TO TERMINAL											
	0	1	2	3	4	5	6	7	8	9	10	11
0	•											
1		•										
2			•									
3				•								
4					•							
5						•						
6							•					
7								•				
8									•			
9										•		
10											•	
11												•

DIAL READS	COMMON $\overline{C}$ CONNECTED TO TERMINAL											
	$\overline{0}$	$\overline{1}$	$\overline{2}$	$\overline{3}$	$\overline{4}$	$\overline{5}$	$\overline{6}$	$\overline{7}$	$\overline{8}$	$\overline{9}$	$\overline{10}$	$\overline{11}$
0	•											
1		•										
2			•									
3				•								
4					•							
5						•						
6							•					
7								•				
8									•			
9										•		
10											•	
11												•

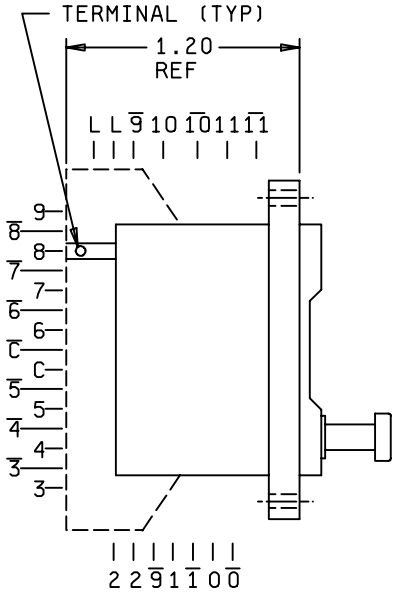

FIGURE 3. Terminal design and configuration - Continued.

No. 12 2 POLE

DIAL READS	COMMON C CONNECTED TO TERMINAL									
	0	1	2	3	4	5	6	7	8	9
0	•									
1		•								
2			•							
3				•						
4					•					
5						•				
6							•			
7								•		
8									•	
9										•

DIAL READS	COMMON $\overline{C}$ CONNECTED TO TERMINAL									
	$\overline{0}$	$\overline{1}$	$\overline{2}$	$\overline{3}$	$\overline{4}$	$\overline{5}$	$\overline{6}$	$\overline{7}$	$\overline{8}$	$\overline{9}$
0	•									
1		•								
2			•							
3				•						
4					•					
5						•				
6							•			
7								•		
8									•	
9										•

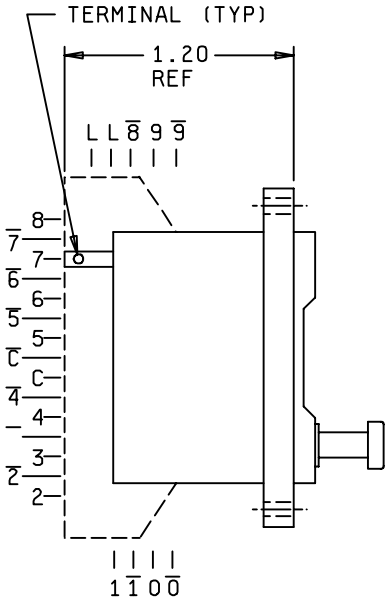

No. 13 2 POLE

DIAL READS	COMMON C CONNECTED TO TERMINAL							
	0	1	2	3	4	5	6	7
0	•							
1		•						
2			•					
3				•				
4					•			
5						•		
6							•	
7								•

DIAL READS	COMMON $\overline{C}$ CONNECTED TO TERMINAL							
	$\overline{0}$	$\overline{1}$	$\overline{2}$	$\overline{3}$	$\overline{4}$	$\overline{5}$	$\overline{6}$	7
0	•							
1		•						
2			•					
3				•				
4					•			
5						•		
6							•	
7								•

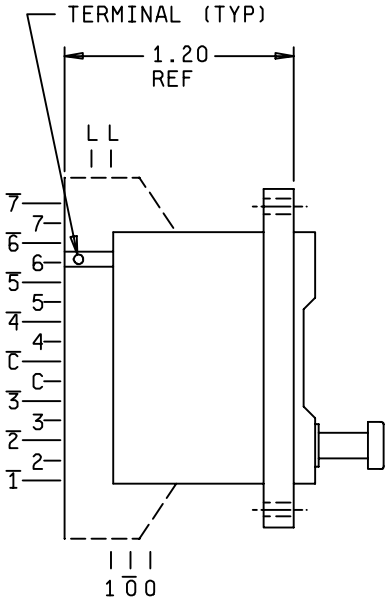

FIGURE 3. Terminal design and configuration - Continued.

REQUIREMENTS:

Dimensions and configuration: See figure 1 and 2.

Construction: D.

Angle of Throw: 30°, 36° and 45° indexing, also octal or binary codes.

Temperature-life characteristic: D, test loads as shown in table I.

TABLE I. Electrical test load.

Test of condition	Resistive	
At atmospheric pressure	0.125 A	28 V dc, 115 V ac
At reduced barometric pressure	0.05 A	28 V dc, 115 V ac
Dry circuit	10 mA	50 mV

Vibration grade: 3 (15g, 10 - 2,000 Hz).

Shock types: M (100 g's)

Altitude rating: C (70,000 feet).

Terminal design: See figure 3 and table III.

Contact resistance:
Initial: 50 milliohms, maximum.
Following life (rotational): 70 milliohms, maximum.

Luminace: Illuminated switches only as shown in table II.

TABLE II. Luminance.

Lamp	Switch filter	Brightness	Rating	
			Volts	Ampere
MS90452-6833	Clear	1.50 ± .75 foot-lamberts	5	0.60
MS90452-6833	Red	.70 ± .50 foot-lamberts	5	0.60

Rotational torque: 20 ounce minimum to 40 ounce maximum.

Seal: Method II, when specified in table I.

Dielectric withstanding voltage: 1,000 volts rms, at atmospheric pressure and 450 volts, rms, at reduced barometric pressure applied between the switch terminals and termials to case.

Sand and dust: Applicable.

Explosion: Applicable.

Life (rotational): Test condition G, method 206 of MIL-STD-202.

EMI/RFI shielding: Applicable when specified (see table III).

Military part number: M22710/23- (dash number from table III).

Suppression data: This style supersedes style SRPC09 of MIL-C-22710/9.

Table III. Part numbers and characteristics.

Dash number M22710/23-		Terminal design and configuration number	Seal test	illumination	Readout characters
With EMI/RFI shielding	Without EMI/RFI shielding				
1001	001	1 of figure 3	No	None	B/W
1002	002		No	None	W/B
1003	003		Yes	None	B/W
B/W	004		Yes	None	W/B
W/B	005		Yes	None	B/W
1006	006		No	None	W/B
1007	007		Yes	White	B/W
B/W	008		Yes	White	W/B
W/B	009		No	White	B/W
1010	010		Yes	Red	W/B
1011	011		Yes	Red	B/W
1012	012		No	Red	W/B
1013	013	2 of figure 3	No	None	B/W
1014	014		No	None	W/B
1015	015		Yes	None	B/W
1016	016		Yes	None	W/B
1017	017		Yes	None	B/W
1018	018		No	None	W/B
1019	019		Yes	White	B/W
1020	020		Yes	White	W/B
1021	021		No	White	B/W
1022	022		Yes	Red	W/B
1023	023		Yes	Red	B/W
1024	024		No	Red	W/B
1025	025	3 of figure 3	No	None	B/W
1026	026		No	None	W/B
1027	027		Yes	None	B/W
1028	028		Yes	None	W/B
1029	029		Yes	None	B/W
1030	030		No	None	W/B
1031	031		Yes	White	B/W
1032	032		Yes	White	W/B
1033	033		No	White	B/W
1034	034		Yes	Red	W/B
1035	035		Yes	Red	B/W
1036	036		No	Red	W/B

Table III. Part numbers and characteristics - Continued.

Dash number M22710/23-		Terminal design and configuration number	Seal test	illumination	Readout characters
With EMI/RFI shielding	Without EMI/RFI shielding				
1037	037	4 of figure 3	No	None	B/W
1038	038		No	None	W/B
1039	039		Yes	None	B/W
1040	040		Yes	None	W/B
1041	041		Yes	None	B/W
1042	042		No	None	W/B
1043	043		Yes	White	B/W
1044	044		Yes	White	W/B
1045	045		No	White	B/W
1046	046		Yes	Red	W/B
1047	047		Yes	Red	B/W
1048	048		No	Red	W/B
1049	049	5 of figure 3	No	None	B/W
1050	050		No	None	W/B
1051	051		Yes	None	B/W
1052	052		Yes	None	W/B
1053	053		Yes	None	B/W
1054	054		No	None	W/B
1055	055		Yes	White	B/W
1056	056		Yes	White	W/B
1057	057		No	White	B/W
1058	058		Yes	Red	W/B
1059	059		Yes	Red	B/W
1060	060		No	Red	W/B
1061	061	6 of figure 3	No	None	B/W
1062	062		No	None	W/B
1063	063		Yes	None	B/W
1064	064		Yes	None	W/B
1065	065		Yes	None	B/W
1066	066		No	None	W/B
1067	067		Yes	White	B/W
1068	068		Yes	White	W/B
1069	069		No	White	B/W
1070	070		Yes	Red	W/B
1071	071		Yes	Red	B/W
1072	072		No	Red	W/B
1073	073	7 of figure 3	No	None	B/W
1074	074		No	None	W/B
1075	075		Yes	None	B/W
1076	076		Yes	None	W/B
1077	077		Yes	None	B/W
1078	078		No	None	W/B
1079	079		Yes	White	B/W
1080	080		Yes	White	W/B
1081	081		No	White	B/W
1082	082		Yes	Red	W/B
1083	083		Yes	Red	B/W
1084	084		No	Red	W/B

Table III. Part numbers and characteristics - Continued.

Dash number M22710/23-		Terminal design and configuration number	Seal test	illumination	Readout characters
With EMI/RFI shielding	Without EMI/RFI shielding				
1085	085	8 of figure 3	No	None	B/W
1086	086		No	None	W/B
1087	087		Yes	None	B/W
1088	088		Yes	None	W/B
1089	089		Yes	None	B/W
1090	090		No	None	W/B
1091	091		Yes	White	B/W
1092	092		Yes	White	W/B
1093	093		No	White	B/W
1094	094		Yes	Red	W/B
1095	095		Yes	Red	B/W
1096	096		No	Red	W/B
1097	097	9 of figure 3	No	None	B/W
1098	098		No	None	W/B
1099	099		Yes	None	B/W
1100	100		Yes	None	W/B
1101	101		Yes	None	B/W
1102	102		No	None	W/B
1103	103		Yes	White	B/W
1104	104		Yes	White	W/B
1105	105		No	White	B/W
1106	106		Yes	Red	W/B
1107	107		Yes	Red	B/W
1108	108		No	Red	W/B
1109	109	10 of figure 3	No	None	B/W
1110	110		No	None	W/B
1111	111		Yes	None	B/W
1112	112		Yes	None	W/B
1113	113		Yes	None	B/W
1114	114		No	None	W/B
1115	115		Yes	White	B/W
1116	116		Yes	White	W/B
1117	117		No	White	B/W
1118	118		Yes	Red	W/B
1119	119		Yes	Red	B/W
1120	120		No	Red	W/B
1121	121	11 of figure 3	No	None	B/W
1122	122		No	None	W/B
1123	123		Yes	None	B/W
1124	124		Yes	None	W/B
1125	125		Yes	None	B/W
1126	126		No	None	W/B
1127	127		Yes	White	B/W
1128	128		Yes	White	W/B
1129	129		No	White	B/W
1130	130		Yes	Red	W/B
1131	131		Yes	Red	B/W
1132	132		No	Red	W/B

Table III. Part numbers and characteristics - Continued.

Dash number M22710/23-		Terminal design and configuration number	Seal test	illumination	Readout characters
With EMI/RFI shielding	Without EMI/RFI shielding				
1133	133	12 of figure 3	No	None	B/W
1134	134		No	None	W/B
1135	135		Yes	None	B/W
1136	136		Yes	None	W/B
1137	137		Yes	None	B/W
1138	138		No	None	W/B
1139	139		Yes	White	B/W
1140	140		Yes	White	W/B
1141	141		No	White	B/W
1142	142		Yes	Red	W/B
1143	143		Yes	Red	B/W
1144	144		No	Red	W/B
1145	145	13 of figure 3	No	None	B/W
1146	146		No	None	W/B
1147	147		Yes	None	B/W
1148	148		Yes	None	W/B
1149	149		Yes	None	B/W
1150	150		No	None	W/B
1151	151		Yes	White	B/W
1152	152		Yes	White	W/B
1153	153		No	White	B/W
1154	154		Yes	Red	W/B
1155	155		Yes	Red	B/W
1156	156		No	Red	W/B

Custodians:
Army - CR
Navy- EC
Air Force - 11
DLA - CC

Review activities:
Army - AR. CR4, SM
Navy - AS, MC
Air Force - 99

Preparing Activity:
DLA - CC

(Project 5930-1724-08)