INCH POUND

MIL-PRF-22885/77D
1 March 2001

SUPERSEDING
MIL-PRF-22885/77C
18 December 1987

PERFORMANCE SPECIFICATION SHEET

SWITCHES, PUSH BUTTON, ILLUMINATED, 4-LAMP, 0.75 SQUARE, 7.5 AMPERES, AND LOW LEVEL INTEGRATED WIRE TERMINATION, ELECTROMAGNETIC INTERFERENCE SHIELDED, SUNLIGHT READABLE

This specification sheet is approved for use by all Departments and Agencies of the Department of Defense.

The requirements for acquiring the indicator lights described herein shall consist of this specification sheet and MIL-PRF-22885.

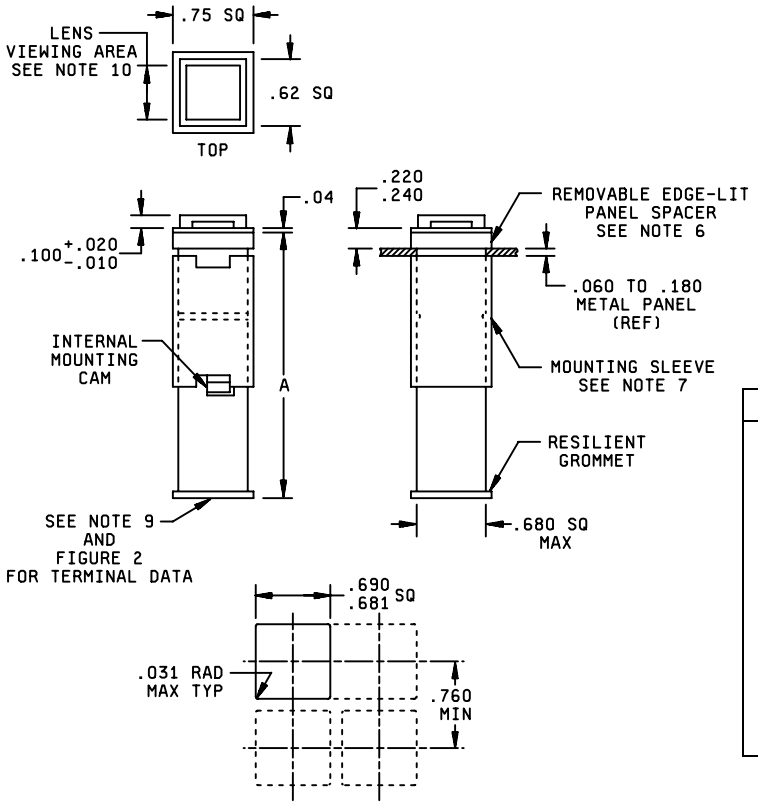

Dimension A	
Momentary	2.95 max
Maintained depressed	2.95 max
Magnetic holding	3.56 max
Indicator light	2.26 max

FIGURE 1. Switch.

DISTRIBUTION STATEMENT A. Approved for public release; distribution is unlimited.

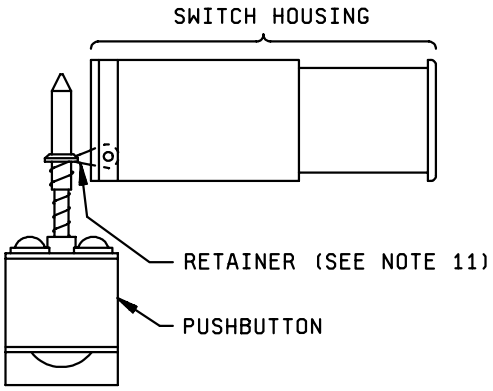

Inches	mm	Inches	mm	Inches	mm
.010	0.25	.180	4.57	.690	17.53
.020	0.51	.220	5.59	.75	19.0
.030	0.76	.240	6.10	.760	19.3
.031	0.79	.53	13.5	1.645	41.78
.04	1.0	.62	15.7	1.870	47.50
.060	1.52	.679	17.25		
.100	2.54	.680	17.27		

NOTES:
1. Dimensions are in inches.
2. Unless otherwise specified, tolerances are ±.005 (0.13 mm) for three place decimals and ±.03 (0.8 mm) for two place decimals.
3. Metric equivalents are given for general information only.
4. Exact shape of switch optional provided dimensions specified are not exceeded.
5. A .194 (4.93 mm) thick spacer is supplied with each switch unit for SAE-AS7788 panel requirements.
6. Spacer places switch mounting flange flush with top of overlay panel. Spacer to be used only for edge-light panels, otherwise install behind panel ahead of sleeve.
7. Mounting sleeve shall not exceed .760 square and shall be reversible to accommodate edge-light panel requirements.
8. Pushbutton designed to prevent incorrect insertion into switch housing.
9. Terminations-Electrical connections shall be made by crimp, insertable-removable contacts and be environmentally sealed by a resilient grommet.
10. Available area for legend illumination is .53 square for display type W and .48 square for display type S.
11. Restricted in complete removal from switch housing.

FIGURE 1. Switch - Continued.

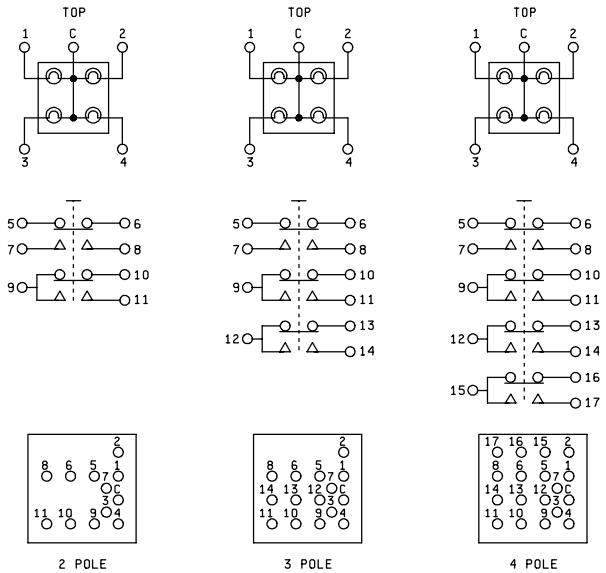

VIEW 1. MOMENTARY AND MAINTAINED
DEPRESSED ALTERNATE ACTION.

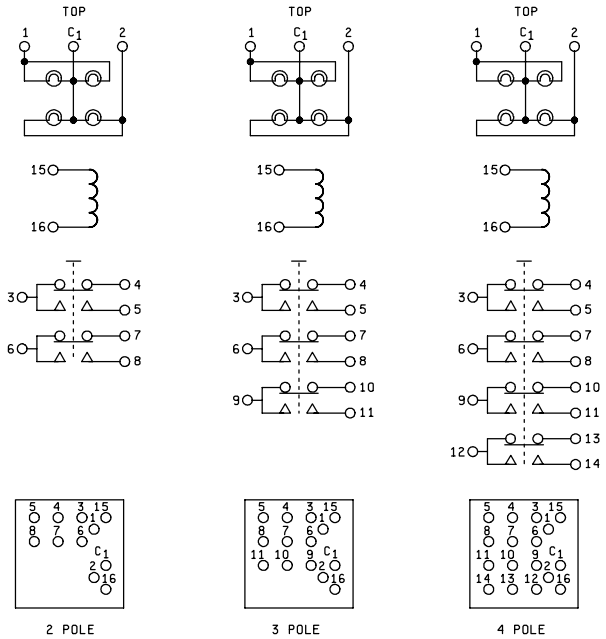

VIEW 2. MAGNETIC HOLDING. SWITCH ROTATED 90° CLOCKWISE FOR LEGEND PLATE STYLE 2.
SWITCH IS AVAILABLE IN LEGEND PLATE STYLES 0,1, AND 2 ONLY.

NOTES:
1. Lamp schematics indicate lamp positions as viewed from front of switch.
2. Terminals shall be permanently marked on switch housing as shown.

FIGURE 2. Schematic diagram.

REQUIREMENTS:

Design and construction: See figure 1. Basic switches shall be MIL-PRF-8805/101 switches listed on QPL-8805.

Enclosure design: 1 (unsealed).

Temperature characteristic: 1 (-55°C to +85°C).

Vibration grade: 3 (10-2000 Hz).

Operation: A (momentary action), D (magnetically held), E (Position indicating, alternate action), H (indicator light).

Illuminated color:

Display type W (white background) - See table I.

Display type S (Sunlight readable) - See table II.

TABLE I. Illuminated color - display type W.

Chromaticity coordinates 1/ 2200° kelvin		
Colors	X	Y
Green	.350	SL 2/
	.350	.610
	.185	.610
	.265	.720
Yellow	.530	.442
	.544	SL 2/
	.571	.402
	.582	SL 2/
Red	.680	.300
	.690	.310
	.715	.265
	.725	.275
Blue	.180	.305
	.065	.250
	.095	.150
	.225	.220
White	.484 ref	.415 ref

X is not less than .350.
Y is not greater than .470
$Y - Y_o$ or $Y_o - Y$ is not numerically greater than 0.03X.
(Y_o is the Y coordinate of the Planckian radiator for a given X).

1/ The chromaticities of the diffusing lenses or colored filters expressed as X and Y coordinates on the CIE chromaticity diagram shall lie within areas bounded by the coordinates listed for each color, using a source illuminate of 2200°K.

2/ SL = spectrum locus (where intersected by other of coordinate pair).

TABLE II. Illuminated color - display type S. 1/

Colors	X	Y
Red	.695	.285
	.710	SL 2/
	.655	.325
	.660	SL 2/
Green	.300	SL 2/
	.300	.600
	.380	.600
	.380	SL 2/
Yellow	.562	.415
	.570	SL 2/
	.596	.382
	.605	SL 2/
Blue	.230	.420
	.230	.350
	.320	.350
	.320	.420
White	.400	.420
	.460	.420
	.400	.380
	.460	.380

1/ The chromaticities of the colors are expressed as “X” and “Y” coordinates of the CIE chromaticity diagram and are within the limits bound by the coordinates listed for each color.
2/ SL = spectrum locus (where intersected by other of coordinate pair).

Display type:

W (White until illuminated, then background appears in color).

Material:

Housing: Corrosion resistant steel or aluminum alloy.

Termination: Terminals shall accept male pin contact M39029/1-101.

Insertion-extraction tools: M81969/14-02.

Sealing grommet: Silicone rubber.

Recommended wire diameter: .078 inch maximum.

Terminals shall meet the resistance to probe damage, maintenance aging, contact insertion and removal forces in accordance with the contact design, contact retention, and module design paragraphs of MIL-T-81714.

Weight: 1.880 ounces maximum for momentary and alternation action and indicator light.

2.0 ounces maximum for magnetic hold.

Lamps:

Display type W pushbutton shall accommodate four lamps (T-1 ¾ midget flange base) except lens configuration 0 (see figure 3) shall accommodate only two lamps.

Display type S (sunlight readable) illumination is by four 5 volt, T-1, .15 MSCP lamps. Other T-1 lamps are available, with different illumination results. Lamps shall be acquired separately.

Operating characteristics:

Actuation force: 3.5 pounds ±1.5 pounds.

Actuation travel: Actuation occurs when the face of the pushbutton is below the mounting flange.

Lens extraction force: 1 ½ to 4 pounds.

Holding coil: 0.04 ±.01 amperes at 28 V dc. will hold in at 18 V dc and drop out at 14 V dc.

Shock: 75 G sawtooth (MIL-STD-202, method 213, test condition H).

Moisture resistance: Following step 6 of the final cycle of the moisture resistance test, while switches are still wet, the insulation resistance measurement shall be not less than 5 megohms.

Electrical endurance: See tables III and IV for electrical load conditions. For magnetically held switches, one cycle shall consist of a mechanical actuation, an electrical hold, and an electrical release.

TABLE III. Electrical ratings - silver contacts. 1/ 2/

Load	Sea level		50,000 feet
	28 V dc	115 V ac, 60 Hz	28 V dc
	amperes	amperes	amperes
Resistive	7.5	7.5	4
Inductive 3/	5.0	5.0	2.5
Lamp 4/	1.0	1.0	1.0

1/ Minimum conditions are dependent on use and atmospheric conditions.
2/ For multiple pole switching of maximum rated loads, derate maximum load rating 30%.
3/ L/R - .026.
4/ Inrush, 10:1 for 20 milliseconds maximum.

TABLE IV. Electrical ratings - gold plated contacts.

Load	28 V dc Sea level	28 V dc 50,000 feet
	amperes	amperes
Resistive	1	1
Inductive	.5	.5

Low level life: Applicable to gold contact switches.

EMI/RFI shieldinhg: Shielding efficiency test applicable, except the shielding attenuation shall be not less than 47 dB at 100 MHz, 39 dB at 400 MHz and 33 dB at 1,000 MHz.

Luminance:

Display type W: See table V.

Display type S: Sunlight readability contrast requirements apply.

TABLE V Luminance for display type W.

Color	Color code	Brightness 1/ (foot-lamberts, minimum average)
Blue	B	8.0
Green	G	50.0
Red	R	30.0
White	W	180.0
Yellow	Y	300.0

1/ When illuminated by two MS25237-387 lamps of 0.30 ±0.02 mean spherical candlepower at 28 volts dc, readings are for lens configuration 0. Luminance is without EMI screen. Brightness is reduced by approximately 50% when EMI screen is specified.

Sunlight readability: Applicable to display type S switches, see table VII. Units shall be tested for $0_1 = 45°$ and $0_2 = 0°$ only. This procedure does not test readability under specularly reflective (glare) condition. The average contrast ratio of each legend character to the background shall be 0.6 minimum in the lighted legend condition. In the unlighted legend condition, the average contrast ratio of each legend character to the background shall have an absolute value less than or equal to 0.1.

Qualification inspection: All part numbers will be approved for inclusion in the qualified products list upon successful completion of testing specified in table VI. Table VI is based on use of qualified MIL-PRF-8805/101 basic switches in the assembly.

TABLE VI. Qualification inspection - group submission.

Inspection 1/	Sample
Group I	All samples
Group II	M22885/77-632RG 3/ (4 samples) M22885/77-065R (4 samples)
Group III	M22885/77-018RG (2 samples)
Group VI 2/	M22885/77-018RG (2 samples) M22885/77-453RG 3/ (2 samples) M22885/77-065R (2 samples)
Group VII	M22885/77-632RG 3/ (2 samples)
Group VIII	Type S display: 2 pushbuttons of each color (10 samples), of lens configuration 0, and with EMI/RFI shielding. 3/ 5/ Type W display: 2 pushbuttons of each color (10 samples), of lens configuration 0, and without EMI/RFI shielding. 5/

1/ Inspection groups in accordance with qualification inspection table of MIL-PRF-22885.
2/ Electrical endurance: Silver contacts - test resistive load, ac, only. Gold contacts - test sea level resistive, 28 V dc only. Lamps used during electrical endurance test shall be MIL-DTL-6363/8-7 for type W display and for type S display: T-1 submidget flange base, 0.15 ± 25% Mean spherical candlepower, 5 volt, and .115 ampere lamps.
3/ Legend shall be in accordance with MIL-PRF-22885 sunlight readability test paragraph.
4/ Low level life test not required.
5/ Pushbuttons shall be assembled to any representative switch body.

Part numbers: Part numbers are assigned as illustrated below. Part numbers do not include legend description. Acquire switches with legends as category II items in accordance with MIL-PRF-22885.

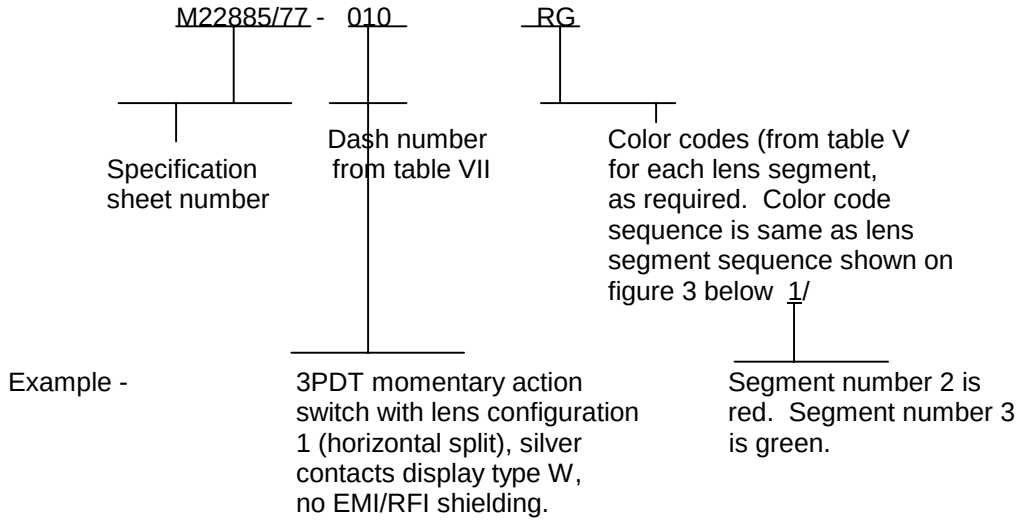

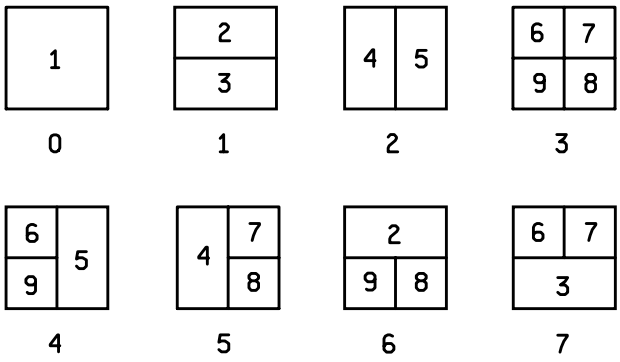

FIGURE 3. Lens configuration and segment numbers.

1/ Part number constructed as shown replace and are interchangeable with previous part numbers which included segment numbers in addition to color codes (example: M22885/77-010-2R3G).

TABLE VII. Dash numbers.

Dash numbers		Operation	Circuit	Lens configur-ation (see figure 3)	Contact material	Display type
Non-EMI shielded	EMI shielded					
001	217	Momentary	2PDT	0	Silver	W
002	218	Momentary	2PDT	1	Silver	W
003	219	Momentary	2PDT	2	Silver	W
004	220	Momentary	2PDT	3	Silver	W
005	221	Momentary	2PDT	4	Silver	W
006	222	Momentary	2PDT	5	Silver	W
007	223	Momentary	2PDT	6	Silver	W
008	224	Momentary	2PDT	7	Silver	W
009	225	Momentary	3PDT	0	Silver	W
010	226	Momentary	3PDT	1	Silver	W
011	227	Momentary	3PDT	2	Silver	W
012	228	Momentary	3PDT	3	Silver	W
013	229	Momentary	3PDT	4	Silver	W
014	230	Momentary	3PDT	5	Silver	W
015	231	Momentary	3PDT	6	Silver	W
016	232	Momentary	3PDT	7	Silver	W
017	233	Momentary	4PDT	0	Silver	W
018	234	Momentary	4PDT	1	Silver	W
019	235	Momentary	4PDT	2	Silver	W
020	236	Momentary	4PDT	3	Silver	W
021	237	Momentary	4PDT	4	Silver	W
022	238	Momentary	4PDT	5	Silver	W
023	239	Momentary	4PDT	6	Silver	W
024	240	Momentary	4PDT	7	Silver	W
025	241	E 1/	2PDT	0	Silver	W
026	242	E 1/	2PDT	1	Silver	W
027	243	E 1/	2PDT	2	Silver	W
028	244	E 1/	2PDT	3	Silver	W
029	245	E 1/	2PDT	4	Silver	W
030	246	E 1/	2PDT	5	Silver	W
031	247	E 1/	2PDT	6	Silver	W
032	248	E 1/	2PDT	7	Silver	W
033	249	E 1/	3PDT	0	Silver	W
034	250	E 1/	3PDT	1	Silver	W
035	251	E 1/	3PDT	2	Silver	W
036	252	E 1/	3PDT	3	Silver	W
037	253	E 1/	3PDT	4	Silver	W
038	254	E 1/	3PDT	5	Silver	W
039	255	E 1/	3PDT	6	Silver	W
040	256	E 1/	3PDT	7	Silver	W
041	257	E 1/	4PDT	0	Silver	W
042	258	E 1/	4PDT	1	Silver	W
043	259	E 1/	4PDT	2	Silver	W
044	260	E 1/	4PDT	3	Silver	W
045	261	E 1/	4PDT	4	Silver	W
046	262	E 1/	4PDT	5	Silver	W
047	263	E 1/	4PDT	6	Silver	W
048	264	E 1/	4PDT	7	Silver	W

See footnotes at end of table.

TABLE VII. Dash numbers - Continued.

Dash numbers		Operation	Circuit	Lens configur-ation (see figure 3)	Contact material	Display type
Non-EMI shielded	EMI shielded					
049	265	Mag. hold	2PDT	0	Silver	W
050	266	Mag. hold	2PDT	1	Silver	W
051	267	Mag. hold	2PDT	2	Silver	W
057	268	Mag. hold	3PDT	0	Silver	W
058	269	Mag. hold	3PDT	1	Silver	W
059	270	Mag. hold	3PDT	2	Silver	W
065	271	Mag. hold	4PDT	0	Silver	W
066	272	Mag. hold	4PDT	1	Silver	W
067	273	Mag. hold	4PDT	2	Silver	W
274	282	Indicator	Indicator	0	N/A	W
275	283	Indicator	Indicator	1	N/A	W
276	284	Indicator	Indicator	2	N/A	W
277	285	Indicator	Indicator	3	N/A	W
278	286	Indicator	Indicator	4	N/A	W
279	287	Indicator	Indicator	5	N/A	W
280	288	Indicator	Indicator	6	N/A	W
281	289	Indicator	Indicator	7	N/A	W
290	469	Momentary	2PDT	0	Gold	W
291	470	Momentary	2PDT	1	Gold	W
292	471	Momentary	2PDT	2	Gold	W
293	472	Momentary	2PDT	3	Gold	W
294	473	Momentary	2PDT	4	Gold	W
295	474	Momentary	2PDT	5	Gold	W
296	475	Momentary	2PDT	6	Gold	W
297	476	Momentary	2PDT	7	Gold	W
298	477	Momentary	3PDT	0	Gold	W
299	478	Momentary	3PDT	1	Gold	W
300	479	Momentary	3PDT	2	Gold	W
301	480	Momentary	3PDT	3	Gold	W
302	481	Momentary	3PDT	4	Gold	W
303	482	Momentary	3PDT	5	Gold	W
304	483	Momentary	3PDT	6	Gold	W
305	484	Momentary	3PDT	7	Gold	W
306	485	Momentary	4PDT	0	Gold	W
307	486	Momentary	4PDT	1	Gold	W
308	487	Momentary	4PDT	2	Gold	W
309	488	Momentary	4PDT	3	Gold	W
310	489	Momentary	4PDT	4	Gold	W
311	490	Momentary	4PDT	5	Gold	W
312	491	Momentary	4PDT	6	Gold	W
313	492	Momentary	4PDT	7	Gold	W

See footnotes at end of table.

TABLE VII. Dash numbers - Continued.

Dash numbers		Operation	Circuit	Lens configur-ation (see figure 3)	Contact material	Display type
Non-EMI shielded	EMI shielded					
314	493	E 1/	2PDT	0	Gold	W
315	494	E 1/	2PDT	1	Gold	W
316	495	E 1/	2PDT	2	Gold	W
317	496	E 1/	2PDT	3	Gold	W
318	497	E 1/	2PDT	4	Gold	W
319	498	E 1/	2PDT	5	Gold	W
320	499	E 1/	2PDT	6	Gold	W
321	500	E 1/	2PDT	7	Gold	W
322	501	E 1/	3PDT	0	Gold	W
323	502	E 1/	3PDT	1	Gold	W
324	503	E 1/	3PDT	2	Gold	W
325	504	E 1/	3PDT	3	Gold	W
326	505	E 1/	3PDT	4	Gold	W
327	506	E 1/	3PDT	5	Gold	W
328	507	E 1/	3PDT	6	Gold	W
329	508	E 1/	3PDT	7	Gold	W
330	509	E 1/	4PDT	0	Gold	W
331	510	E 1/	4PDT	1	Gold	W
332	511	E 1/	4PDT	2	Gold	W
333	512	E 1/	4PDT	3	Gold	W
334	513	E 1/	4PDT	4	Gold	W
335	514	E 1/	4PDT	5	Gold	W
336	515	E 1/	4PDT	6	Gold	W
337	516	E 1/	4PDT	7	Gold	W
338	517	Mag. hold	2PDT	0	Gold	W
339	518	Mag. hold	2PDT	1	Gold	W
340	519	Mag. hold	2PDT	2	Gold	W
341	520	Mag. hold	3PDT	0	Gold	W
342	521	Mag. hold	3PDT	1	Gold	W
343	522	Mag. hold	3PDT	2	Gold	W
344	523	Mag. hold	4PDT	0	Gold	W
345	524	Mag. hold	4PDT	1	Gold	W
346	525	Mag. hold	4PDT	2	Gold	W
347	526	Momentary	2PDT	0	Silver	S
348	527	Momentary	2PDT	1	Silver	S
349	528	Momentary	2PDT	2	Silver	S
350	529	Momentary	2PDT	3	Silver	S
351	560	Momentary	2PDT	4	Silver	S
352	561	Momentary	2PDT	5	Silver	S
353	562	Momentary	2PDT	6	Silver	S
354	563	Momentary	2PDT	7	Silver	S

See footnotes at end of table.

TABLE VII. Dash numbers - Continued.

Dash numbers		Operation	Circuit	Lens configur-ation (see figure 3)	Contact material	Display type
Non-EMI shielded	EMI shielded					
355	534	Momentary	3PDT	0	Silver	S
356	535	Momentary	3PDT	1	Silver	S
357	536	Momentary	3PDT	2	Silver	S
358	537	Momentary	3PDT	3	Silver	S
359	538	Momentary	3PDT	4	Silver	S
360	539	Momentary	3PDT	5	Silver	S
361	540	Momentary	3PDT	6	Silver	S
362	541	Momentary	3PDT	7	Silver	S
363	542	Momentary	4PDT	0	Silver	S
364	543	Momentary	4PDT	1	Silver	S
365	544	Momentary	4PDT	2	Silver	S
366	545	Momentary	4PDT	3	Silver	S
367	546	Momentary	4PDT	4	Silver	S
368	547	Momentary	4PDT	5	Silver	S
369	548	Momentary	4PDT	6	Silver	S
370	549	Momentary	4PDT	7	Silver	S
371	550	E 1/	2PDT	0	Silver	S
372	551	E 1/	2PDT	1	Silver	S
373	552	E 1/	2PDT	2	Silver	S
374	553	E 1/	2PDT	3	Silver	S
375	554	E 1/	2PDT	4	Silver	S
376	555	E 1/	2PDT	5	Silver	S
377	556	E 1/	2PDT	6	Silver	S
378	557	E 1/	2PDT	7	Silver	S
379	558	E 1/	3PDT	0	Silver	S
380	559	E 1/	3PDT	1	Silver	S
381	560	E 1/	3PDT	2	Silver	S
382	561	E 1/	3PDT	3	Silver	S
383	562	E 1/	3PDT	4	Silver	S
384	563	E 1/	3PDT	5	Silver	S
385	564	E 1/	3PDT	6	Silver	S
386	565	E 1/	3PDT	7	Silver	S
387	566	E 1/	4PDT	0	Silver	S
388	567	E 1/	4PDT	1	Silver	S
389	568	E 1/	4PDT	2	Silver	S
390	569	E 1/	4PDT	3	Silver	S
391	570	E 1/	4PDT	4	Silver	S
392	571	E 1/	4PDT	5	Silver	S
393	572	E 1/	4PDT	6	Silver	S
394	573	E 1/	4PDT	7	Silver	S
395	574	Mag. hold	2PDT	0	Silver	S
396	575	Mag. hold	2PDT	1	Silver	S
397	576	Mag. hold	2PDT	2	Silver	S
398	577	Mag. hold	3PDT	0	Silver	S
399	578	Mag. hold	3PDT	1	Silver	S
400	579	Mag. hold	3PDT	2	Silver	S

See footnotes at end of table.

TABLE VII. Dash numbers - Continued.

Dash numbers		Operation	Circuit	Lens configur-ation (see figure 3)	Contact material	Display type
Non-EMI shielded	EMI shielded					
401	580	Mag. hold	4PDT	0	Silver	S
402	581	Mag. hold	4PDT	1	Silver	S
403	582	Mag. hold	4PDT	2	Silver	S
404	583	Indicator	Indicator	0	N/A	S
405	584	Indicator	Indicator	1	N/A	S
406	585	Indicator	Indicator	2	N/A	S
407	586	Indicator	Indicator	3	N/A	S
408	587	Indicator	Indicator	4	N/A	S
409	588	Indicator	Indicator	5	N/A	S
410	589	Indicator	Indicator	6	N/A	S
411	590	Indicator	Indicator	7	N/A	S
412	591	Momentary	2PDT	0	Gold	S
413	592	Momentary	2PDT	1	Gold	S
414	593	Momentary	2PDT	2	Gold	S
415	594	Momentary	2PDT	3	Gold	S
416	595	Momentary	2PDT	4	Gold	S
417	596	Momentary	2PDT	5	Gold	S
418	597	Momentary	2PDT	6	Gold	S
419	598	Momentary	2PDT	7	Gold	S
420	599	Momentary	3PDT	0	Gold	S
421	600	Momentary	3PDT	1	Gold	S
422	601	Momentary	3PDT	2	Gold	S
423	602	Momentary	3PDT	3	Gold	S
424	603	Momentary	3PDT	4	Gold	S
425	604	Momentary	3PDT	5	Gold	S
426	605	Momentary	3PDT	6	Gold	S
427	606	Momentary	3PDT	7	Gold	S
428	607	Momentary	4PDT	0	Gold	S
429	608	Momentary	4PDT	1	Gold	S
430	609	Momentary	4PDT	2	Gold	S
431	610	Momentary	4PDT	3	Gold	S
432	611	Momentary	4PDT	4	Gold	S
433	612	Momentary	4PDT	5	Gold	S
434	613	Momentary	4PDT	6	Gold	S
435	614	Momentary	4PDT	7	Gold	S
436	615	E 1/	2PDT	0	Gold	S
437	616	E 1/	2PDT	1	Gold	S
438	617	E 1/	2PDT	2	Gold	S
439	618	E 1/	2PDT	3	Gold	S
440	619	E 1/	2PDT	4	Gold	S
441	620	E 1/	2PDT	5	Gold	S
442	621	E 1/	2PDT	6	Gold	S
443	622	E 1/	2PDT	7	Gold	S

See footnotes at end of table.

TABLE VII. Dash numbers - Continued.

Dash numbers		Operation	Circuit	Lens configur-ation (see figure 3)	Contact material	Display type
Non-EMI shielded	EMI shielded					
444	623	E 1/	3PDT	0	Gold	S
445	624	E 1/	3PDT	1	Gold	S
446	625	E 1/	3PDT	2	Gold	S
447	626	E 1/	3PDT	3	Gold	S
448	627	E 1/	3PDT	4	Gold	S
449	628	E 1/	3PDT	5	Gold	S
450	629	E 1/	3PDT	6	Gold	S
451	630	E 1/	3PDT	7	Gold	S
452	631	E 1/	4PDT	0	Gold	S
453	632	E 1/	4PDT	1	Gold	S
454	633	E 1/	4PDT	2	Gold	S
455	634	E 1/	4PDT	3	Gold	S
456	635	E 1/	4PDT	4	Gold	S
457	636	E 1/	4PDT	5	Gold	S
458	637	E 1/	4PDT	6	Gold	S
459	638	E 1/	4PDT	7	Gold	S
460	639	Mag. hold	2PDT	0	Gold	S
461	640	Mag. hold	2PDT	1	Gold	S
462	641	Mag. hold	2PDT	2	Gold	S
463	642	Mag. hold	3PDT	0	Gold	S
464	643	Mag. hold	3PDT	1	Gold	S
465	644	Mag. hold	3PDT	2	Gold	S
423	602	Mag. hold	4PDT	0	Gold	S
424	603	Mag. hold	4PDT	1	Gold	S
425	604	Mag. hold	4PDT	2	Gold	S

1/ Maintained depressed alternate action.

NOTE: 800 and 900 series dash numbers, for switch housing only and pushbutton only, have been canceled without replacement.

Custodians:
Army - CR
Navy - EC
Air Force - 11
DLA - CC

Preparing activity:
DLA - CC

(Project 5930-1716-11)

Review activities:
Army - AR, AV, MI
Navy - AS, MC, OS, SH
Air Force - 19, 99