NOTE: The document identifier and heading has been changed on this page to reflect that this is a performance specification. There are no other changes to this document. The document identifier on subsequent pages has not been changed, but will be changed the next time this document is revised.

MIL-PRF-23419/2N
12 January 1988
SUPERSEDING
MIL-F-23419/2M
1 August 1986

PERFORMANCE SPECIFICATION SHEET

FUSES, INSTRUMENT TYPE, STYLE FM02 (INDICATING)

This specification is approved for use by all Departments and Agencies of the Department of Defense.

The requirements for acquiring the fuses described herein shall consist of this document and the latest issue of MIL-F-23419.

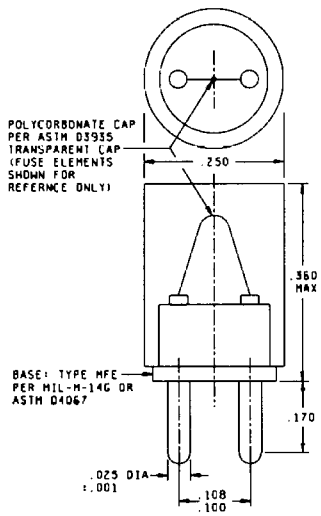

INCHES	MM
.001	0.03
.025	0.64
.100	2.54
.108	2.75
.170	4.32
.250	6.35
.360	2.98

NOTES:
1. Dimensions are in inches.
2. Metric equivalents are given for general information only.
3. Unless otherwise specified, tolerance is ±.010 (0.25 mm)

FIGURE 1. Style FM02 fuses.

Ⓝ denotes change

DISTRIBUTION STATEMENT A. Approved for public release; distribution is unlimited.

REQUIREMENTS:

Dimensions and configuration: See figure 1.

Applicable fuseholders: MIL-F-19207/26, type FHN42W; MIL-F-19207/28, type FHL44G; MIL-F-19207/29, type FHL45G.

Terminals:

Material: Copper.

Finish: Bright alloy or tin plate.

Strength: 5 pounds force along terminal axis; 5 pounds force perpendicular to terminal axis at base.

Current rating, nominal: See table I.

Voltage rating, maximum: 125 volts.

Current carrying capacity: 100 percent at +25°C; 110 percent at -55°C; 90 percent at +85°C. The temperature of the case, body, or terminal shall, at no point, rise more than +70°C above the ambient air temperature.

Resistance: Not applicable.

Overload interrupt: Percentage of nominal rating, interrupt time -55°C through +85°C, 200 percent in 0 to 10 seconds; 300 percent in 0 to 0.1 second.

Short circuit interrupt: See table I.

Shock: Method I, except type designation FM02 125V 1/500A shall be tested in accordance with test condition A of method 213, MIL-STD-202.

Thermal shock: Method 107, test condition A, MIL-STD-202.

(N) Marking: Manufacturer's name or trademark, current rating and type only.

Characteristic: See table I.

TABLE I. Type designation identification.

Type designation				Short circuit interrupt rating (amperes ac) 1/
Style	Characteristic	Maximum voltage (volts)	Current rating (amperes)	
FM02	A	125 V	1/500 A	10,000
FM02	A	125 V	1/200 A	10,000
FM02	A	125 V	1/100 A	10,000
FM02	A	125 V	1/64 A	10,000
FM02	A	125 V	1/32 A	10,000
FM02	A	125 V	1/16 A	10,000
FM02	A	125 V	1/10 A	10,000
FM02	A	125 V	1/8 A	10,000
FM02	A	125 V	2/10 A	10,000
FM02	A	125 V	1/4 A	10,000
FM02	A	125 V	3/10 A	10,000
FM02	A	125 V	4/10 A	10,000
(N) FM02	A	125 V	1/2 A	10,000
FM02	A	125 V	6/10 A	10,000
FM02	A	125 V	3/4 A	10,000
FM02	A	125 V	1 A	10,000
FM02	A	125 V	1-1/2 A	10,000
FM02	A	125 V	2 A	10,000
FM02	A	125 V	3 A	300
FM02	A	125 V	4 A	300
FM02	A	125 V	5 A	300

1/ AC short circuit test current may be applied at a random point on the voltage sine wave.

Qualification inspection:

Inspection routine. Group II samples shall be as shown in table II below:

TABLE II. Group II samples.

Inspection	Number of sample fuses
Group II	16
Terminal strength	4
Overload interrupt	
200% at -55°C	4
200% at +85°C	4
300% at -55°C	4
300% at +85°C	4
Insulation resistance	16

The number of group III samples for qualification (or first article) testing shall consist of four sample fuses of each of the current ratings as shown in table III. Short circuit interrupt tests shall be conducted at the alternating current voltage indicated, and the fuses shall be capable of withstanding a minimum short circuit current as shown in table III. Insulation resistance test shall be as specified in MIL-F-23419.

TABLE III. Short circuit tests.

Fuse type	Current rating	Short circuit current	AC type voltage
FM02	2 A	10,000 A	125 V
FM02	5 A	300 A	125 V

Supersession and cross-reference: The superseding items include the requirements of the superseded items. The existing stocks of superseded items may be used. When exhausted, the superseding items shall be used (see table IV).

(N) Part number: The part number shall be in accordance with table IV and is identified as the superseding part number; i.e., FM02A125V1/500A.

TABLE IV. Supersession and cross-reference.

Superseding part number	Superseded part numbers				
CAGE 1/ 81349	CAGE 1/ 81349	CAGE 1/ 81349	CAGE 1/ 81349	CAGE 1/ 81349	CAGE 1/ 81349
FM02A125V1/500A	FM02-125V-1/500A	FM02-1/500A	FM02125V1/500A	FM021/500A	M23419/2-001
FM02A125V1/200A	FM02-125V-1/200A	FM02-1/200A	FM02125V1/200A	FM021/200A	M23419/2-002
FM02A125V1/100A	FM02-125V-1/100A	FM02-1/100A	FM02125V1/100A	FM021/100A	M23419/2-003
FM02A125V1/64A	FM02-125V-1/64A	FM02-1/64A	FM02125V1/64A	FM021/64A	M23419/2-004
FM02A125V1/32A	FM02-125V-1/32A	FM02-1/32A	FM02125V1/32A	FM021/32A	M23419/2-005
FM02A125V1/16A	FM02-125V-1/16A	FM02-1/16A	FM02125V1/16A	FM021/16A	M23419/2-006
FM02A125V1/10A	FM02-125V-1/10A	FM02-1/10A	FM02125V1/10A	FM021/10A	M23419/2-007
FM02A125V1/8A	FM02-125V-1/8A	FM02-1/8A	FM02125V1/8A	FM021/8A	M23419/2-008
FM02A125V2/10A	FM02-125V-2/10A	FM02-2/10A	FM02125V2/10A	FM022/10A	M23419/2-009
FM02A125V1/4A	FM02-125V-1/4A	FM02-1/4A	FM02125V1/4A	FM021/4A	M23419/2-010
FM02A125V3/10A	FM02-125V-3/10A	FM02-3/10A	FM02125V3/10A	FM023/10A	M23419/2-011
FM02A125V4/10A	FM02-125V-4/10A	FM02-4/10A	FM02125V4/10A	FM024/10A	M23419/2-012
FM02A125V1/2A	FM02-125V-5/10A	FM02-5/10A	FM02125V5/10A	FM025/10A	M23419/2-013
FM02A125V6/10A	FM02-125V-6/10A	FM02-6/10A	FM02125V6/10A	FM026/10A	M23419/2-014
FM02A125V3/4A	FM02-125V-3/4A	FM02-3/4A	FM02125V3/4A	FM023/4A	M23419/2-015
FM02A125V1A	FM02-125V-1A	FM02-1A	FM02125V1A	FM021A	M23419/2-016
FM02A125V1-1/2A	FM02-125V-1-1/2A	FM02-1-1/2A	FM02125V1-1/2A	FM021-1/2A	M23419/2-017
FM02A125V2A	FM02-125V-2A	FM02-2A	FM02125V2A	FM022A	M23419/2-018
FM02A125V3A	FM02-125V-3A	FM02-3A	FM02125V3A	FM023A	M23419/2-019
FM02A125V4A	FM02-125V-4A	FM02-4A	FM02125V4A	FM024A	M23419/2-020
FM02A125V5A	FM02-125V-5A	FM02-5A	FM02125V5A	FM025A	M23419/2-021

1/ CAGE is the Federal Supply Code for Manufacturers in accordance with Federal Supply Handbooks H4-1 and H4-2.

Custodians:
Army - ER
Navy - EC
Air Force - 85

Review activities:
Army - MI
Navy - AS
Air Force - 11, 17, 99
DLA - ES

User activities:
Army - AR, AT, AV, ME
Navy - MC
Air Force - 19

Preparing activity:
Navy - EC

Agent:
DLA - ES

(Project 5920-0443)