MILITARY SPECIFICATION SHEET

Ⓐ TRANSFORMER, AUDIO FREQUENCY, TF4R21AJ

This specification is approved for use by all Departments and Agencies of the Department of Defense.

The complete requirements for procuring the transformer described herein shall consist of this document and the latest issue of Specification MIL-T-27.

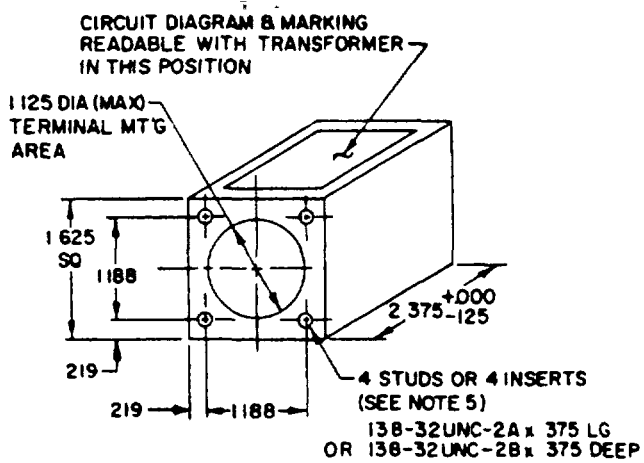

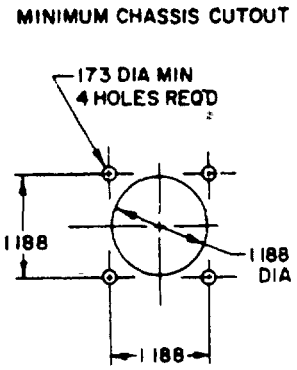

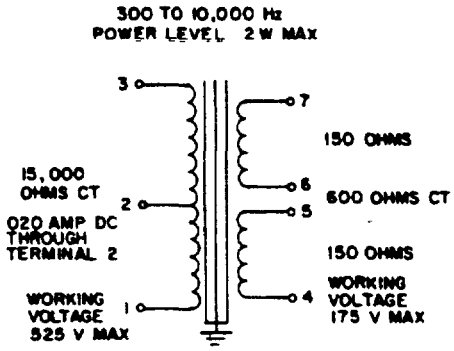

CIRCUIT DIAGRAM and marking

INCHES	MM
.125	3.18
.138	3 51
.219	5 56
.375	9.53
1.125	28.58
1.188	30.18
1.625	41.28
2.375	60.33

NOTES.

1. Dimensions are in inches.
2. Metric equivalents (to the nearest 01 mm) are given for general information only and are based upon 1 inch = 25.4 mm.
3. Unless otherwise specified, tolerance on overall case dimensions is +.000 (.00 mm) -.063 (1.60 mm).
4. Tolerance on mounting dimensions is +.016 (.41 mm).
5. Inserts not recommended for new design.
6. Terminal arrangement optional within mounting area indicated.
7. When numbers in parentheses, e.g. (1-3), are used, they indicate the winding and the extreme terminals of the winding. When the extreme terminals of two windings are used, e.g. (4-7), the windings are connected in series, i e., terminals 5 and 6 are connected

Ⓐ denotes change

FSC 5950

REQUIREMENTS:

Electrical rating:

Primary power level - 2 W, maximum; .1 W, minimum.

Working voltage (1-3) - 525 V, maximum.
(4-5) - 175 V, maximum.
(6-7) - 175 V, maximum.

Primary current - .020 ampere dc through terminal 2, .001 ampere dc, maximum unbalance.
Primary impedance (1-3) - 15,000 ohms ct.

Design, configuration, and physical dimensions: See figure.

Material: Metal encased, steel.

Weight: .72 pound, maximum.

Duty cycle: Continuous.

Altitude: 50,000 feet, maximum.

Life expectancy: 10,000 hours, minimum.

Temperature range: -55°C to 105°C.

Terminals: Solder terminals, No. 18 AWG.

Terminal height: .375 (9.53 mm) $^{+.000}_{-.188}$ (4.78 mm).

Terminal strength: Method 211 of MIL-STD-202, test condition A, 5 pounds.

Operating temperature: 105°C, maximum.

Dielectric withstanding voltage: Method 301 of MIL-STD-202; test voltage at sea level, 1,500 Vrms. At reduced barometric pressure, 500 Vrms.

Electrical characteristics:

Harmonic distortion - Not more than 1 percent with 173 V, 300 Hz across (1-3) and .020 ampere dc through terminal 2.

No load (center-tap voltage unbalance only) - With 173 V, 1,000 Hz across (1-3) and .020 ampere dc through terminal 2:
Unbalance (4-5) and (6-7) - 1 percent, maximum.
Unbalance (1-2) and (2-3) - 1 percent, maximum.

Secondary load impedance (4-5) - 150 ohms.
(6-7) - 150 ohms ±10 percent.
(4-7) - 600 ohms ct.

Primary impedance - With approximately 30 V, 1,000 Hz across (1-3) and .020 ampere dc through terminal 2 and 600 ohms ct across (4-7), the primary impedance shall be 15,000 ohms ct ±10 percent across (1-3).

Frequency response:
Range - 300 to 10,000 Hz at rated power, flat within ±2 dB, reference frequency = 1,000 Hz; test voltage 30 Vrms (1-3).

Insertion loss - 1.5 dB maximum, with 173 V, input at 1,000 Hz across (1-3).

Resonance - Second resonant frequency = 20,000 Hz, minimum.

Polarity - Additive, with terminals 3 and 4, and 5 and 6 connected.

Temperature rise: 20°C maximum, above an ambient of 85°C, with rated power at 300 Hz.

Vibration, high frequency: Method 204, test condition B.

Shock (specified pulse): Method 213, test condition I.

Part number example:

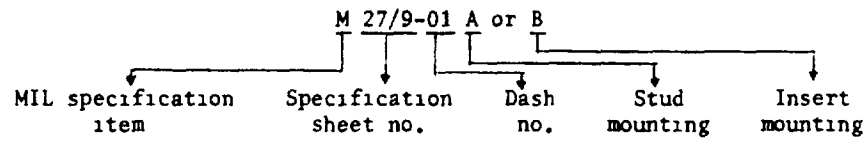

(For cross reference of MS part number to military part number, see table I.)

TABLE I. Cross reference.

Mounting	MS90006B		M27/9	
	Dash no.	Type designation	Dash no.	Ⓐ Type designation
Studs	-A	TF4RX13AJ003	-01A	TF4R21AJ
Inserts	-B	TF4RX13AJ003	-01B	TF4R21AJ

Ⓐ NOTE: Qualification approval to MIL-T-27/9 shall be sufficient to grant qualification approval to MIL-T-27/3 through MIL-T-27/8.

Custodians:
Army - EL
Navy - EC
Air Force - 85

Review activities:
Army - EL, MU
Navy - EC
Air Force - 11, 17, 99
DSA - ES

User activities:
Army - ME
Navy - MC, AS
Air Force - 19

Preparing activity:
Army - EL

Agent:
DSA - ES

(Project 5950-0533-6)

FOLD

Department of the Army
Headquarters
U.S.Army Electronics Command
Fort Monmouth, New Jersey 07703

POSTAGE AND FEES PAID

OFFICIAL BUSINESS

Commanding General
U.S.Army Electronics Command
ATTN: AMSEL- DRSEL-RD-TS
Fort Monmouth, New Jersey 07703

To detach this form, cut along this line

FOLD

To detach this form, along this line

SPECIFICATION ANALYSIS SHEET

Form Approved
Budget Bureau No 22-R255

INSTRUCTIONS This sheet is to be filled out by personnel either Government or contractor, involved in the use of the specification in procurement of products for ultimate use by the Department of Defense This sheet is provided for obtaining information on the use of this specification which will insure that suitable products can be procured with a minimum amount of delay and at the least cost Comments and the return of this form will be appreciated Fold on lines on reverse side staple in corner, and send to preparing activity Comments and suggestions submitted on this form do not constitute or imply authorization to waive any portion of the referenced document(s) or serve to amend contractual requirements

SPECIFICATION MIL-T-27/9A TRANSFORMER, AUDIO FREQUENCY, TF4R21AJ

ORGANIZATION

CITY AND STATE

CONTRACT NUMBER

MATERIAL PROCURED UNDER A

☐ DIRECT GOVERNMENT CONTRACT ☐ SUBCONTRACT

1 HAS ANY PART OF THE SPECIFICATION CREATED PROBLEMS OR REQUIRED INTERPRETATION IN PROCUREMENT USE?

A GIVE PARAGRAPH NUMBER AND WORDING

B RECOMMENDATIONS FOR CORRECTING THE DEFICIENCIES

2 COMMENTS ON ANY SPECIFICATION REQUIREMENT CONSIDERED TOO RIGID

3 IS THE SPECIFICATION RESTRICTIVE?

☐ YES ☐ NO *(If "yes", in what way?)*

4 REMARKS *(Attach any pertinent data which may be of use in improving this specification If there are additional papers attach to form and place both in an envelope addressed to preparing activity)*

SUBMITTED BY *(Printed or typed name and activity - Optional)*

DATE

DD FORM 1 JAN 66 1426

REPLACES EDITION OF 1 OCT 64 WHICH MAY BE USED

ESC-PM 1068-68