NOTE: The document identifier and heading have been changed on this page to reflect that this is a performance specification. There are no other changes to this document. The document identifier on subsequent pages has not been changed, but will be changed the next time this document is revised.

MIL-PRF-27/166A
22 January 1985
SUPERSEDING
MIL-T-27/166
18 April 1977

PERFORMANCE SPECIFICATION SHEET

TRANSFORMER, AUDIO, TF4R21YY

This specification is approved for use by all Departments and Agencies of the Department of Defense.

The complete requirements for acquiring the transformer described herein shall consist of this specification sheet and the latest issue of MIL-T-27.

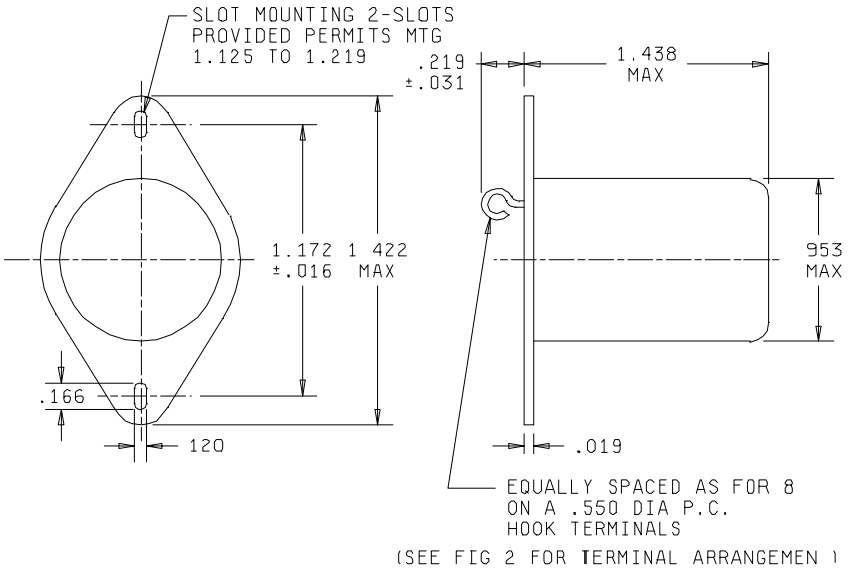

INCHES	MM
.016	0.41
.019	0.48
.031	0.79
.120	3.05
.166	4.22
.219	5.56
.550	13.97
.953	24.21
1.125	28.58
1.172	29.77
1.219	30.96
1.422	36.12
1.438	36.53

NOTES:
1. Dimensions are in inches.
2. Metric equivalents are given for general information only.
3. Marking shall be on the side of the case.
4. Unless otherwise specified, tolerance is ±.005 (0.13 mm).

FIGURE 1. Dimensions and configurations.

(A) denotes change

FSC 5950

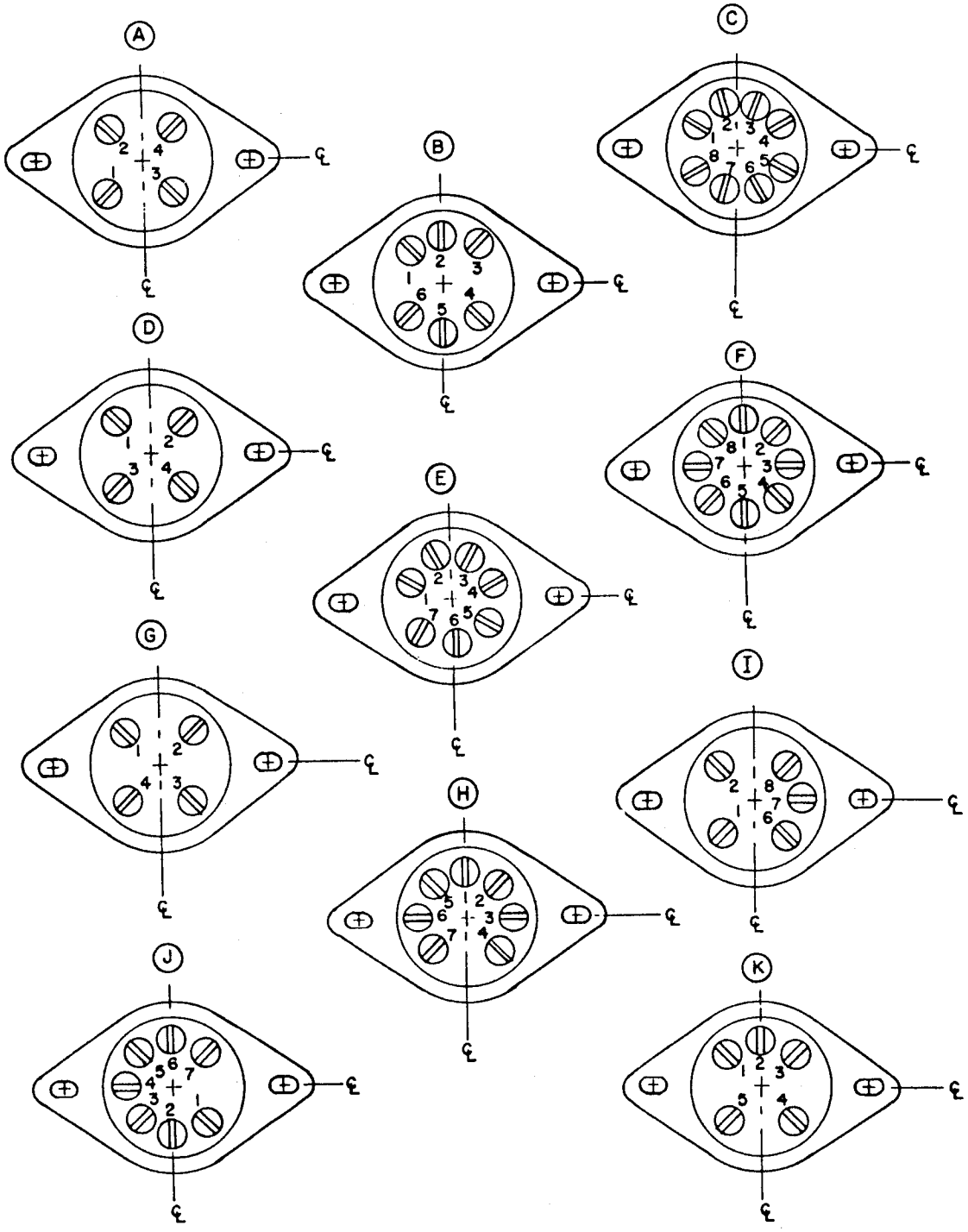

FIGURE 2. Terminal arrangement.

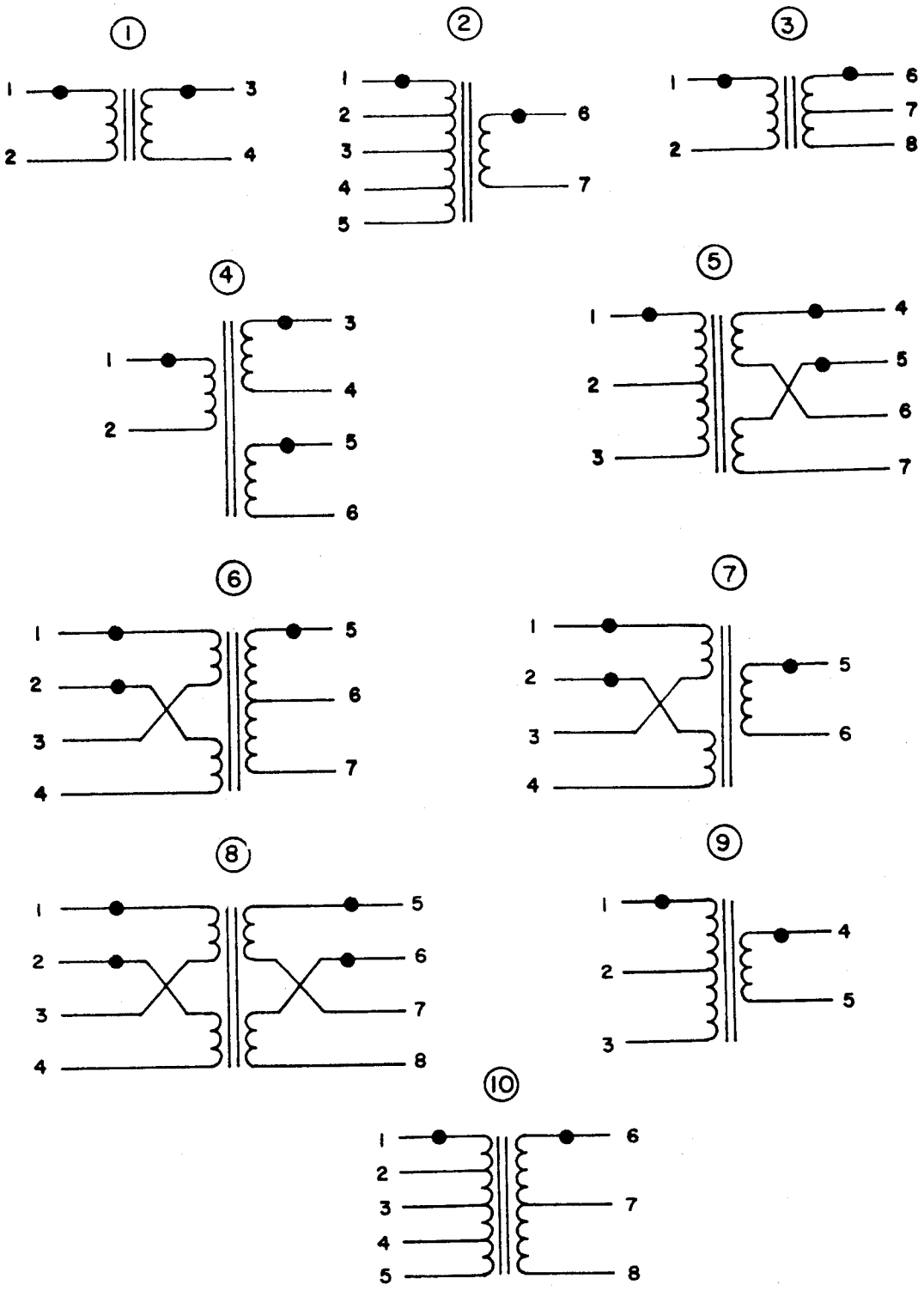

FIGURE 3. Circuit diagrams.

TABLE I. Electrical ratings. 4/

Dash no.	Primary 1/ impedance (ohms)	Secondary 1/ impedance (ohms)	Primary DCR ±25% (ohms)	Secondary DCR ±25% (ohms)	Power level (mW)	Primary dc current (mA)	Working voltage volts	Dielectric 2/ withstanding voltage		Terminal arrangement (see figure 2)	Circuit diagram (see figure 3)
								sea level	reduced barometric pressure		
01	82	135 k	14	6700	63	50	250	750	300	G	1
02	50, 200 CT 500 CT	50 k	54	3827	3	0	175	500	"	H	2
03	50, 200 CT 500 CT	50 k CT	54	3827	3	0	"	"	"	F	10
04	500/125 SPLIT	150/37.5 SPLIT	35	16	250 3/	20	"	"	"	F	8
05	500/125 SPLIT	500/125 SPLIT	37	67	250 3/	20	"	"	"	F	8
06	600/150 SPLIT	600 CT	39	29	6.3	0	"	"	"	J	6
07	600/150 SPLIT	2k/500 SPLIT	70	280	31	0	"	"	"	F	8
08	600/150 SPLIT	1 M	16.5	5100	10	0	"	"	"	B	7
09	1500 CT	500/125 SPLIT	100	35	100	8	"	"	"	J	5
10	2000 CT 4000 CT	8 16	200	0.9	"	4	"	"	"	K	9
11	10 k CT	500/125 SPLIT	750	52	"	"	"	"	"	E	5
12	10k/2.5k SPLIT	2k/500 SPLIT	780	195	"	"	"	"	"	C	8
13	10k/2.5k SPLIT	4k/1k SPLIT	800	350	"	"	"	"	"	C	8
14	10 k	1 M	330	4875	10	0	"	"	"	A	1
15	15 k	60 k	690	3100	4	0	"	"	"	A	1
16	15 k	60 k	690	3100	25		"	"	"	D	1

TABLE I. Electrical ratings - Continued. 4/

Dash no.	Primary 1/ impedance (ohms)	Secondary 1/ impedance (ohms)	Primary DCR ±25% (ohms)	Secondary DCR ±25% (ohms)	Power level (mW)	Primary dc current (mA)	Working voltage volts	Dielectric 2/ withstanding voltage		Terminal arrangement (see figure 2)	Circuit diagram (see figure 3)
								sea level	reduced barometric pressure		
17	15 k	95 k CT	673	3800	3	0	175	500	300	I	3
18	15 k	95 k SPLIT	1260	5800	12	4	175	500	300	B	4
19	20 k CT	600/150 SPLIT	930	45	125	4	175	500	300	J	5

1/ Impedance values written one above the other indicate a range of matching impedances over which the parts will give satisfactory performance as long as the impedance ratio is maintained.

2/ Dielectric withstanding voltage between split sections, 50 volts rms maximum.

3/ 250 mW at 100 Hz, 1 watt at 200 Hz.

(A) 4/ Qualification testing and approval to M27/166-19 shall be sufficient to grant qualification approval to M27/166-01 thru M27/166-19.

REQUIREMENTS: (When numbers in parentheses, e.g., (1-2) are used, they indicate the winding and the extreme terminals of the winding.)

Electrical ratings: See table I.

Working voltage: See table I.

Frequency range: See table II.

Duty cycle: Continuous.

Design and construction:

Dimensions and configuration: See figure 1.

Case: Steel drawn, hermetically sealed.

Terminals: Hooked pin with compressed glass bead header.

Weight: 2.0 ounces maximum.

Altitude: 50,000 feet maximum.

Operating temperature range: -55°C to +105°C.

Terminal strength: MIL-STD-202, method 211, test condition A, 5 pounds.

Vibration (high frequency): MIL-STD-202, method 204.

Dielectric withstanding voltage: See table I.

Electrical characteristics: See table II.

Frequency response: See table II.

Reference frequency: 1 kHz.

Insertion loss: 3 dB at 1 kHz maximum.

Marking location: See figure 1.

Part number: M27/166- (dash number from table I).

TABLE II. Electrical characteristics.

Dash no.	No load (center-tap voltage unbalance only)		Frequency response			Resonance second resonant frequency (min) (kHz)	Polarity same on terminals (see figure 3)
	Potential at 1 kHz (volts)	unbalance ±%	Frequency range (Hz)	+- (dB)	E_L (volts)		
01	---	---	250 - 8,000	2	92	8	1, 3
02	1.0	1.0	50 - 10,000	"	12.2	10	1, 6
03	"	"	50 - 10,000	"	12.2	10	1, 6
04	"	"	100 - 20,000	"	6.1	20	1, 2, 5, 6
05	"	"	100 - 20,000	"	11.2	20	1, 2, 5, 6
06	"	"	50 - 10,000	"	1.9	10	1, 2, 5
07	"	"	50 - 20,000	"	7.9	20	1, 2, 5, 6
08	"	"	200 - 3,000	4	100	3	1, 2, 5
09	"	"	100 - 10,000	2	7.1	10	1, 4, 5
10	"	"	100 - 10,000	"	0.9	"	1, 4
11	"	"	100 - 10,000	"	7.1	"	1, 4, 5
12	"	"	100 - 10,000	"	14	"	1, 2, 5, 6
13	"	"	100 - 10,000	"	20	"	1, 2, 5, 6
14	---	---	200 - 3,000	4	100	3	1, 3
15	---	---	50 - 10,000	2	15.5	10	1, 3
16	---	---	200 - 10,000	"	39	"	1, 3
17	1.0	1.0	50 - 10,000	"	17	"	1, 6
18	1.0	1.0	200 - 10,000	"	34	"	1, 3, 5
19	1.0	1.0	200 - 10,000	"	8.7	"	1, 4, 5

Custodians:
Army - ER
Navy - EC
Air Force - 85

Review activities:
Army - MI, SG
Navy - SH, OS
Air Force - 11, 17, 99
DLA - ES

User activities:
Army - AR, WC, SG, ME
Navy - MC, AS
Air Force - 19

Agent:
DLA - ES

Preparing activity:
Army - ER

(Project 5950-0638)