The documentation and process conversion measures necessary to comply with this revision shall be completed by 30 June 2004

INCH-POUND

MIL-PRF-28861C
30 March 2004
SUPERSEDING
MIL-PRF-28861B
31 January 1994

PERFORMANCE SPECIFICATION

FILTERS AND CAPACITORS, RADIO FREQUENCY/ELECTROMAGNETIC INTERFERENCE SUPPRESSION, GENERAL SPECIFICATION FOR

This specification is approved for use by all Departments and Agencies of the Department of Defense.

1. SCOPE

* 1.1 Scope. This specification covers the general requirements for low-pass filter and capacitors used to suppress radio frequency/electromagnetic interference. Filters furnished to the requirements of this specification contain shunting ceramic discoidal capacitors and series inductors (FSC 5915). Capacitors furnished to the requirements of this specification contain shunting ceramic discoidal capacitors (FSC 5910). For the purposes of this specification, feed-through capacitor types (C circuit configuration) are referred to herein as a filter. Passband power may be alternating current (ac) or direct current (dc) and the filters used primarily in the reduction of broadband radio frequency interference. This specification provides for two levels of product assurance requirements. Filters covered by this specification are capable of operation over the temperature range of -55°C to +125°C.

1.2 Classification.

* 1.2.1 Part or Identifying Number (PIN). Filters specified herein (see 3.1) are identified by a PIN that consists of the basic number of the specification sheet and a coded number. The PIN is coded to provide information concerning case finish and product assurance level. The PIN is in the following format:

M28861/01-	001	T	S
Specification number indicating MIL-PRF-28861/01	Dash number (1.2.1.1)	Case finish (1.2.1.2)	Product assurance level (1.2.1.3)

* 1.2.1.1 Dash number. The dash number is as specified in the individual specification sheet (see 3.1).

1.2.1.2 Case finish. The case finish is identified by a single letter in accordance with table I.

* 1.2.1.3 Product assurance level. This specification provides for two levels of reliability assurance, class B and class S (see 3.2.1). The product assurance level is identified by a single letter in accordance with table II.

Comments, suggestions, or questions on this document should be addressed to: Defense Supply Center Columbus, ATTN: DSCC-VAT, Post Office Box 3990, Columbus, OH 43216-5000 or e-mailed to capacitorfilter@dscc.dla.mil. Since contact information can change, you may want to verify the currency of this address information using the ASSIST Online database at www.dodssp.daps.mil.

1.2.2 Style. The style (see 3.1) is identified by the two letter symbol "FS" followed by a two digit number. The letters identify radio frequency/electromagnetic interference suppression filters and the two digits represent a voltage rating, envelope size and configuration.

TABLE I. Case finish.

Symbol	Finish
T	Tin-plated/tin-lead plated
S	Silver-plated
G	Gold-plated

TABLE II. Product assurance level.

Symbol	Level
S	Class S
B	Class B

2. APPLICABLE DOCUMENTS

* 2.1 General. The documents listed in this section are specified in sections 3 or 4 of this specification. This section does not include documents cited in other sections of this specification or recommended for additional information or as examples. While every effort has been made to ensure the completeness of this list, document users are cautioned that they must meet all specified requirements of documents cited in sections 3 or 4 of this specification, whether or not they are listed.

2.2 Government documents.

* 2.2.1 Specifications, standards, and handbooks. The following specifications, standards, and handbooks form a part of this document to the extent specified herein. Unless otherwise specified, the issues of these documents are those listed in the issue of the Department of Defense Index of Specifications and Standards (DODISS) and supplement thereto, cited in the solicitation (see 6.2).

* DEPARTMENT OF DEFENSE SPECIFICATIONS

MIL-PRF-28861/1 - Filters and Capacitors, Radio Frequency/Electromagnetic Interference Suppression, Hermetically Sealed, Styles FS10 and FS11
MIL-PRF-28861/2 - Filters, Radio Frequency/Electromagnetic Interference Suppression, Hermetically Sealed, Style FS20
MIL-PRF-28861/3 - Filters, Radio Frequency/Electromagnetic Interference Suppression, Hermetically Sealed, Style FS30
MIL-PRF-28861/4 - Filters, Radio Frequency/Electromagnetic Interference Suppression, Hermetically Sealed, Style FS40
MIL-PRF-28861/5 - Filters, Radio Frequency/Electromagnetic Interference Suppression, Hermetically Sealed, Style FS50
MIL-PRF-31033 - Capacitors, Fixed, Ceramic Dielectric, High Reliability, Discoidal, General Specification For

FEDERAL STANDARDS

FED-STD-H28 - Screw-Thread Standards for Federal Services.

* DEPARTMENT OF DEFENSE STANDARDS

MIL-STD-202 - Test Methods for Electronic and Electrical Component Parts.
MIL-STD-220 - Method of Insertion-Loss Measurement.
MIL-STD-790 - Reliability Assurance Program For Electronic Parts Specifications.
MIL-STD-1276 - Leads, for Electronic Component Parts.
MIL-STD-1285 - Marking of Electrical and Electronic Parts.

(Copies of these documents are available online at http://assist.daps.mil/quicksearch/specifications or www.dodssp.daps.mil or from the Standardization Document Order Desk, Building 4D, 700 Robbins Avenue, Philadelphia, PA 19111-5094.)

2.3 Non-Government publications. The following documents form a part of this document to the extent specified herein. Unless otherwise specified, the issues of the documents that are DOD adopted are those listed in the issue of the DODISS cited in the solicitation. Unless otherwise specified, the issues of documents not listed in the DODISS are the issues of the documents cited in the solicitation (see 6.2).

* AMERICAN SOCIETY FOR TESTING AND MATERIALS (ASTM)

ASTM B 16 - Standard Specification for Free-Cutting Brass Rod, Bar, and Shapes for Use in Screw Machines
ASTM B 36 - Standard Specification for Brass Plate, Sheet, Strip, and Rolled Bar
ASTM B 545 - Standard Specification for Electrodeposited Coatings of Tin
ASTM D 92-78 - Flash and Fire Points by Cleveland Open Cup.
ASTM E 595 - Standard Test Method for Total Mass Loss and Collected Volatile Condensable Materials from Outgassing in a Vacuum Environment

(Copies of these documents may be ordered online at www.astm.org or from the American Society for Testing and Materials, 1916 Race Street, Philadelphia, PA 19103.)

* ELECTRONIC INDUSTRIES ALLIANCE (EIA)

EIA-469 - Standard Test Method for Destructive Physical Analysis of High Reliability Ceramic Monolithic Capacitors. (DoD adopted)

EIA-557 - Statistical Process Control Systems. (DoD adopted)

* (Application for copies should be addressed to the Electronics Industries Alliance, 2001 Eye Street, NW, Washington, DC 20006).

* NATIONAL ELECTRICAL MANUFACTURERS ASSOCIATION (NEMA)

NEMA-MW1000 Magnet Wire

(Copies of this document may be ordered online at www.nema.org or from the National Electrical Manufacturers Association, 1300 North 17th Street, Suite 1847, Rosslyn, VA 22209.)

* THE INSTITUTE FOR INTERCONNECTING AND PACKAGING ELECTRONIC CIRCUITS INC. (IPC)

J-STD-006 - Requirements for Electronic Grade Solder Alloys and Fluxed and Non-Fluxed Solid Solders for Electronic Soldering Applications.

(Applications for copies should be addressed to The Institute for Interconnecting and Packaging Electronic Circuits (IPC, INC.), 2215 Sanders Road, Suite 200 South, Northbrook, IL 60062 or at www.ipc.org.)

* SOCIETY OF AUTOMOTIVE ENGINEERS (SAE)

SAE AMS2418 Plating, Copper

(Copies of this document may be ordered online at www.sae.org or from the Society of Automotive Engineers, 400 Commonwealth Drive, Warrendale, PA 15096-0001.)

(Non-Government standards and other publications are normally available from the organizations that prepare or distribute the documents. These documents also may be available in or through libraries or other informational services.)

2.4 Order of precedence. In the event of a conflict between the text of this document and the references cited herein (except for related associated detail specifications, specification sheets, or MS standards), the text of this document takes precedence. Nothing in this document, however, supersedes applicable laws and regulations unless a specific exemption has been obtained.

3. REQUIREMENTS

3.1 Specification sheets. The individual part requirements shall be as specified herein and in accordance with the applicable specification sheets. In the event of any conflict between requirements of this specification and the specification sheets, the latter shall govern.

* 3.2 Qualification. Filters furnished under this specification shall be products which are authorized by the qualifying activity for listing on the applicable qualified products list (QPL) before contract award. In addition, the manufacturer shall obtain certification from the qualifying activity that the QPL system requirements of 3.3 and 4.2 have been met and are being maintained. Authorized distributors that are approved to MIL-STD-790 distributor requirements by the QPL manufacturers are listed in the QPL.

* 3.2.1 Product assurance requirements. Two levels of filter reliability assurance are provided for in this specification. Classes S and B filters shall be those which have been subjected to and passed all applicable requirements, test and inspections detailed herein, including qualification and conformance inspection requirements for the specified class. Class S is the highest product assurance level of this specification and is intended for space applications.

* 3.3 QPL system. The manufacturer shall establish and maintain a QPL system for parts covered by this specification. Requirements for this system are specified in MIL-STD-790 and 4.2. In addition, the manufacturer shall establish a Statistical Process Control (SPC) system that meets the requirements of 3.3.1

* 3.3.1 Statistical process control (SPC). As part of the overall MIL-STD-790 QPL system, the manufacturer shall establish a SPC system that meets the requirements of EIA-557. Processes for application of SPC techniques should include the following:

a. Discoidal capacitors.

b. Incoming inspection.

c. Solder processing.

d. Assembly.

e. Finishing.

3.4 Materials. The materials shall be as specified herein. However, when a definite material is not specified, a material shall be used which will enable the filters to meet the performance requirements of this specification. Acceptance or approval of any constituent material shall not be construed as a guaranty of the acceptance of the finished product.

3.4.1 Impregnating and potting compounds. Compounds used in the impregnating and potting of filters shall be chemically inactive with respect to the filter unit and case (see 3.5.2). The compound either in the state of original application or as a result of having aged, shall have no adverse effect on the performance of the filter. The use of wax is prohibited.

3.4.2 Outgassing (applicable to nonhermetically sealed class S filters only) (see 6.7). When tested as specified in 4.6.28, the polymeric sample shall meet the following requirements:

Total mass loss (TML) - - - - - - - - - - - - - - - - - Shall not exceed 1.0 percent
Volatile condensable material (VCM) - - - - - - -Shall not exceed 0.1 percent

* 3.4.3 Pure tin prohibition. Pure tin shall be prohibited as follows:

a. As a final finish on all filter body surfaces both internal and external to the device body.

b. As a final finish on all associated mounting hardware.

c. As an underplate for both the filter body and the mounting hardware

3.5 Interface and physical dimensions. Filters shall meet the interface and physical dimensions specified (see 3.1).

3.5.1 Performance. Filter performance shall be such that none of the components of the filter are over-stressed during operation as electrically and mechanically specified herein. No degradation, unless allowed for herein, shall occur during any 100-percent screens specified herein. The filter shall meet the specified electrical characteristics at all operating temperatures, voltages, currents, or any combinations thereof as specified herein. The insertion loss requirements between any two adjacent specified frequencies shall be that of the lower of the two frequencies unless otherwise specified.

3.5.2 Case. Filters shall be enclosed in a suitable case in order to pass the performance requirements of this specification. The case shall be hermetically sealed or non-hermetically sealed as specified (see 3.1 and 6.4.2). The case shall protect the filter components from damage under all test conditions specified and prevent leakage of impregnant or filling compound. All metallic surfaces shall be free from insulating protective finishes except as specified.

* 3.5.3 Finish. All exposed metallic surfaces shall be suitably protected against corrosion by plating, solder coating, or other means. The finish shall:

a. Provide good electrical contact when used as a terminal or conductor.

b. Have uniform texture and appearance.

c. Be adherent.

d. Be free from blisters, pinholes, and other defects that may affect the protective value of the coating.

3.5.3.1 Tin-plated or tin-lead plated. T code case finish filters (see 1.2.1.2 and 3.1) shall be tin plated (except that the minimum lead content shall be 3 percent), tin-lead plated, or hot-solder dipped. Use of pure tin plating is prohibited. For guidance on tin and tin-lead finishes, see 6.5.1 and 6.5.2.

3.5.3.2 Silver-plated. S code case finish filters (see 1.2.1.2 and 3.1) shall be silver-plated. For guidance on silver finishes see 6.5.3.

3.5.3.3 Gold-plated. G code case finish filters (see 1.2.1.2 and 3.1) shall be gold plated. For guidance on gold finishes see 6.5.4.

* 3.5.4 Solder dip (retinning) leads. The manufacturer (or authorized category B or C distributor) may solder dip/retin the leads of product supplied to this specification provided the solder dip/retin process has been approved by the qualifying activity (see appendix A).

3.5.5 Threaded parts. Unless otherwise specified (see 3.1), all threaded parts shall be in accordance with FED-STD-H28.

* 3.5.6 Inductive elements. Unless otherwise specified, the wire used when winding inductors shall have a minimum diameter of .004 inch (0.10 mm) and shall be capable of meeting the requirements of MW-16, MW-20, MW-35, or MW-36 of MW-1000, or equivalent. Inductors shall be inspected to ensure that the wire is not kinked or nicked and that the insulation is continuous. For class S filters only, cores and ferrite beads shall be 100 percent inspected for chipped coating, cracks, chips, and material cracks and chips.

3.5.7 Capacitor elements.

* 3.5.7.1 Class B filters. Capacitor elements used in class B filters shall meet the requirements of MIL-PRF-31033 for class B except that qualification, group A, and group B inspections are not required. Required inspections are as follows:

a. In-process inspection.

b. Destructive physical analysis. Capacitors shall be examined as specified in MIL-PRF-31033.

* 3.5.7.2 Class S filters. Capacitor elements used in class S filters shall meet the requirements of MIL-PRF-31033 for class S except for qualification inspection and shall include the following:

a. In-process inspection.

b. Inspection of product for delivery (group A and group B inspections) except that the group B life test is not required.

3.5.8 Solders. When solders are used in filters covered by this specification, the solder shall have a liquid point not less than 280◦C or as specified (see 3.1). For further information and guidance on soldering filters, see 6.4.3.

3.5.9 Potting (when applicable). When potting compound is used to secure the inductive elements, the inductive elements shall be potted to at least 80 percent of their height so that the potting makes intimate contact with the case.

* 3.5.10 Weight (when applicable). Filters shall meet the weight requirements specified (see 3.1).

3.6 Visual inspection (class S filters only). Filters shall be inspected for anomalies as specified in 4.6.1.2.

3.7 Thermal shock and voltage conditioning. When filters are tested as specified in 4.6.2, they shall meet the following requirements:

Insulation resistance (+125°C): Shall meet initial requirements (see 3.1) and, for class S broadband style filters (MIL-PRF-28861/1 through MIL-PRF-28861/5), shall decrease no more than 50 percent from pre-voltage conditioning measurement.

3.8 Dielectric withstanding voltage. When filters are tested as specified in 4.6.3, there shall be no breakdown, flashover, or impairment of any characteristics sufficient to cause failure of the filter.

3.9 Capacitance to ground and dissipation factor. When filters are tested as specified in 4.6.4, the capacitance to ground and dissipation factor shall be as specified (see 3.1).

3.10 Insertion loss. When filters are tested as specified in 4.6.5, the insertion loss shall be as specified (see 3.1).

3.11 Voltage drop. When filters are tested as specified in 4.6.6, the voltage drop shall be as specified (see 3.1).

3.12 DC resistance. When filters are tested as specified in 4.6.7, the dc resistance shall be as specified (see 3.1).

3.13 Radiographic inspection. When filters are tested as specified in 4.6.8, radiographic examination shall not disclose evidence of any defects listed in 4.6.8.

3.14 Seal (hermetically sealed filters only). When filters are tested as specified in 4.6.9, for the fine leak test, the leakage rate shall not exceed the maximum leakage rate as specified (see 3.1). When filters are tested as specified in 4.6.9, for the gross leak test, there shall be no continuous stream of bubbles emanating from the filter, nor shall there be any evidence of leakage of compound from the body of the filter.

3.15 Voltage and temperature limits of capacitance. When filters are tested as specified in 4.6.10, the change in capacitance shall not exceed the value specified (see 3.1).

* 3.16 Temperature rise. When filters are tested as specified in 4.6.11, the maximum temperature rise shall be as specified (see 3.1).

3.17 Barometric pressure (reduced). When filters are tested as specified in 4.6.12, there shall be no breakdown, flashover, or impairments of any characteristics sufficient to cause failure of the filter.

3.18 Insulation resistance. When filters are tested as specified in 4.6.13, the insulation resistance shall not be less than specified (see 3.1).

3.19 Current overload. When filters are tested as specified in 4.6.14, there shall be no evidence of physical damage. After the test, filters shall meet the following requirements:

Insulation resistance (+25°C): Shall meet initial requirements (see 3.1).

Voltage drop: Shall meet initial requirements (see 3.1).

3.20 Resistance to solvents. When filters are tested as specified in 4.6.15, there shall be no evidence of physical damage and the marking shall remain legible.

3.21 Vibration (high frequency). When filters are tested as specified in 4.6.16, there shall be no intermittent, open or short-circuiting, and no physical damage to the filter. After the test, in Group B inspection, Class B filters shall meet the following requirement:

Insertion loss (+25°C): Shall meet initial requirements (see 3.1).

3.22 Random vibration. When filters are tested as specified in 4.6.17, there shall be no intermittent open or short-circuiting, and there shall be no evidence of physical damage to the filter. After the test, filters shall meet the following requirement:

Insertion loss (+25°C): Shall meet initial requirements (see 3.1).

3.23 Thermal shock and immersion (hermetically sealed filters only). When filters are tested as specified in 4.6.18, filters shall meet the following requirements after the test:

Visual inspection: There shall be no evidence of breakdown, flashover, or other physical damage. In addition, there shall be no more than 10 percent corrosion of the terminal hardware or mounting surface and marking shall remain legible.

Dielectric withstanding voltage: As specified in 3.8.

Insulation resistance (+25°C): Shall meet initial requirements (see 3.1).

Insertion loss: Shall meet initial requirements (see 3.1).

3.24 Resistance to soldering heat. When filters are tested as specified in 4.6.19, there shall be no evidence of internal or external damage. After the test, filters shall meet the following requirements:

Insertion loss (+25°C): Shall meet initial requirements (see 3.1).

Insulation resistance (+25°C): Shall meet initial requirements (see 3.1).

* 3.25 Salt atmosphere (corrosion). When filters are tested as specified in 4.6.20, there shall be no harmful or extensive corrosion and at least 90 percent of any exposed metallic surfaces of the filter shall be protected by the finish. For class S filters, minor cosmetic defects and salt atmosphere damage in the thread area (which is attributable to the torquing of parts during thermal shock and voltage conditioning) is acceptable. In addition, the marking shall remain legible.

3.26 Destructive physical analysis (DPA) (class S filters only). When filters are inspected as specified in 4.6.21, the filters shall meet the requirements of appendix B herein.

3.27 Shock (specified pulse). When filters are tested as specified in 4.6.22, there shall be no evidence of intermittent, open or short-circuiting, and no physical damage to the filter. After the test, filters shall meet the following requirement:

Insertion loss (+25°C): Shall meet initial requirements (see 3.1).

3.28 Terminal strength. When filters are tested as specified in 4.6.23, no part of the terminals shall loosen or rupture and no other damage shall result.

3.29 Moisture resistance (hermetically sealed filters only). When filters are tested as specified in 4.6.24, filters shall meet the following requirements:

Visual inspection: There shall be no evidence of breakdown, flashover, or other physical damage. In addition, there shall be no more than 10 percent corrosion of the terminal hardware or mounting surface, and marking shall remain legible after the test.

Dielectric withstanding voltage: As specified in 3.8.

Insulation resistance (+25°C): Shall meet initial requirements (see 3.1).

Capacitance: Shall meet initial requirements (see 3.1).

Dissipation factor: Shall meet initial requirements (see 3.1).

Insertion loss: Shall meet initial requirements (see 3.1).

3.30 Solderability.

3.30.1 Solderability of terminals. When filters are tested as specified in 4.6.25.1, the dipped surface of the terminals shall be at least 95 percent covered with continuous solder coating. The remaining 5 percent of the terminal surface may show only small pinholes or voids and these shall not be concentrated in one area. Bare base metal and areas where the solder dip fails to cover the original coating are indications of poor solderability, and shall be cause for rejection.

3.30.2 Solderability of mounting termination (when applicable). When filters are tested as specified in 4.6.25.2, the joint shall be at least 95 percent covered with continuous solder coating. There shall be no evidence of leaching (loss of metallization). After the test, filters shall meet the following requirements:

Insulation resistance (+25°C): Shall meet initial requirements (see 3.1).

Capacitance: Shall meet initial requirements (see 3.1).

Dissipation factor: Shall meet initial requirements (see 3.1).

3.31 Life. When filters are tested as specified in 4.6.26, filters shall meet the following requirements:

Visual inspection: There shall be no evidence of breakdown, flashover, or other physical damage, and marking shall remain legible.

Dielectric withstanding voltage: As specified in 3.8.

Insulation resistance (+125°C and +25°C): Shall meet initial requirements (see 3.1).

Insertion loss: Shall meet initial requirements (see 3.1).

3.32 Flashpoint of impregnant or potting compound. The manufacturer shall certify that the flashpoint of the impregnant or potting compound are not lower than 165°C, or shall perform the test specified in 4.6.27.

3.33 Marking.

3.33.1 JAN and J marking. The United States Government has adopted, and is exercising legitimate control over the certification marks "JAN" and "J", respectively, to indicate that items so marked or identified are manufactured to, and meet all the requirements of military specifications. Accordingly, items acquired to, and meeting all of the criteria specified herein and in applicable detail specifications shall bear the certification mark "JAN" except that items too small to bear the certification mark "JAN" shall bear the letter "J". The "JAN" or "J" shall be placed immediately before the part number except that if such location would place a hardship on the manufacturer in connection with such marking, the "JAN" or "J" may be located on the first line above or below the part number. Items furnished under contracts or orders which either permit or require deviation from the conditions or requirements specified herein or in applicable detail specifications shall not bear "JAN" or "J". In the event an item fails to meet the requirements of this specification and the applicable specification sheets or detail specifications, the manufacturer shall remove the "JAN" or the "J" from the sample tested and also from all items represented by the sample. The "JAN" or "J" certification mark shall not be used on products acquired to contractor drawings or specifications. The United States Government has obtained Certificate of Registration No. 504,860 for the certification mark "JAN".

3.33.2 Full marking. Each filter shall be marked in accordance with method I of MIL-STD-1285 with the following information:

a. JAN marking.

b. PIN.

c. Manufacturer's source code.

d. Date code and lot symbol.

e. Voltage rating.

f. Current rating.

g. Terminal identification or circuit diagram (nonsymmetrical filters only).

h. Maximum operating power frequency (for ac rated filters only).

3.33.3 Minimum marking. When the physical size of the filter precludes the marking of the information in 3.33.2, the minimum marking required shall be as specified in the specification sheet. In those cases where full marking requirements are not on the filter, the full marking shall be marked on the unit package.

* 3.34 Recycled, recovered, or environmentally preferable materials. Recycled, recovered, or environmentally preferable materials should be used to the maximum extent possible provided that the material meets or exceeds the operational and maintenance requirements, and promotes economically advantageous life cycle costs.

3.35 Workmanship. Filters shall be processed in such a manner as to be uniform in quality and shall be free from cold soldering, corrosion, pits, dents, cracks, rough sharp edges, misalignments, and other defects that will affect life, serviceability, or appearance. Cracks in glass seals are not allowed, however, minor meniscus crazing is acceptable.

* 4. VERIFICATION

* 4.1 Classification of inspections. The inspection requirements specified herein shall be classified as follows:

a. Qualification inspection (see 4.4).

(1) Verification of qualification (see 4.4.3).

b. In-process inspection (see 4.5.1 and 4.5.2).

c. Conformance inspection (see 4.5.3).

(1) Group A inspection (see 4.5.5).

(2) Group B inspection (see 4.5.6).

* 4.2 QPL system. The manufacturer shall establish and maintain a QPL system in accordance with 3.3. Evidence of such compliance is a prerequisite for qualification and retention of qualification.

4.3 Inspection conditions. Unless otherwise specified, all inspections shall be performed in accordance with the test conditions specified in the "GENERAL REQUIREMENTS" of MIL-STD-202 except the temperature shall be +18°C to +30°C, and the relative humidity shall not exceed 75 percent. In cases of dispute, the referee temperature shall be +25°C ± 3°C. Unless otherwise specified, the accuracy of all test voltages, currents, or resistances shall be within 2 percent of that specified.

4.3.1 Reference measurements. When requirements are based on comparative measurements made before and after conditioning, the reference measurement shall be considered the last measurement made at +25°C ± 3°C prior to conditioning. Unless reference measurements have been made within 30 days prior to the beginning of conditioning, they shall be repeated.

4.4 Qualification inspection. Qualification inspection shall be performed at a laboratory acceptable to the Government (see 6.3) on sample units produced with equipment and procedures normally used in production.

4.4.1 Class B filters.

4.4.1.1 Sample. The number of units comprising a sample of filters to be submitted for qualification inspection shall be as specified in table III and appendix A.

* 4.4.1.2 Test routine. Qualification samples shall be subjected to the tests of table III. All sample units shall be subjected to the tests of group I. The sample filters shall then be divided into five groups and subjected to the tests of groups II, III, IV, V, and VI in the order shown.

4.4.1.3 Failures. Failures in excess of those allowed in table III shall be cause for refusal to grant qualification.

4.4.2 Class S filters. Initial qualification to class S will be granted under the following provisions:

a. Class B qualification (class S qualification will be limited to those products qualified to class B).

b. Pass the class S product audit.

* 4.4.3 Verification of qualification.

* 4.4.3.1 Class B filters. To retain qualification, every 12 months the manufacturer shall provide verification of qualification to the qualifying activity. Continued qualification is based upon meeting the following:

a. MIL-STD-790 program.

b. The filter design has not been modified.

c. Group A inspection requirements are met.

d. Group B inspection requirements are met.

In the event that no production occurred during the reporting period, a report shall be submitted certifying that the company still has the capabilities and facilities necessary to produce the item. If during two consecutive reporting periods there has been no production, the manufacturer may be required, at the discretion of the qualifying activity, to submit his qualified products to testing in accordance with the qualification inspection requirements.

* 4.4.3.2 Class S filters. To retain qualification for class S filters, the manufacturer shall provide verification of qualification at 12-month intervals to the qualifying activity. The qualifying activity shall establish the initial reporting date. Continued qualification is based upon meeting the following:

a. Continued class B qualification on the same device type.

b. The filter design has not been modified.

c. Group A inspection requirements are met.

d. Group B inspection requirements are met.

e. Lot-by-lot analysis as specified by the qualifying activity.

In the event that no production occurred during the reporting period, a report shall be submitted certifying that the company still has the capabilities and facilities necessary to produce the item. If during two consecutive reporting periods there has been no production, the manufacturer may be required, at the discretion of the qualifying activity, to submit his qualified products to testing in accordance with the qualification inspection requirements.

* 4.4.3.2.1 Records. Test records shall be in accordance with the format in MIL-STD-790. The manufacturer shall maintain the DPA samples, x-ray films, and group B samples for a minimum of 5 years.

TABLE III. Qualification inspection.

Inspection	Class B	Requirement paragraph	Test method paragraph	No. Samples Class B	Failures Class B
Group I					
Thermal shock and voltage Conditioning	X	3.7	4.6.2		
Dielectric withstanding voltage	X	3.8	4.6.3		
Insulation resistance (at +25°C)	X	3.18	4.6.13		
Capacitance to ground and dissipation factor	X	3.9	4.6.4	All sample units	Not applicable
Insertion loss	X	3.10	4.6.5		
DC resistance 1/	X	3.12	4.6.7		
DC voltage drop 1/	X	3.11	4.6.6.2		
Radiographic inspection	X	3.13	4.6.8		
Seal (when applicable)	X	3.14	4.6.9		
Visual and mechanical inspection	X	3.5 3.33 and 3.35	4.6.1.1		
Group II					
Voltage and temperature limits of capacitance (when applicable)	X	3.15	4.6.10		
Insertion loss (at temperature)	X	3.10	4.6.5.1		
AC voltage drop (when applicable)	X	3.11	4.6.6.1		
Temperature rise	X	3.16	4.6.11	10	
Barometric pressure (reduced)	X	3.17	4.6.12		
Insulation resistance	X	3.18	4.6.13		
Current overload	X	3.19	4.6.14		
Resistance to solvents	X	3.20	4.6.15		1
Group III					
Vibration (high frequency)	X	3.21	4.6.16		
Random vibration	X	3.22	4.6.17		
Thermal shock and immersion	X	3.23	4.6.18		
Seal (when applicable)	X	3.14	4.6.9	10	
Resistance to soldering heat	X	3.24	4.6.19		
Salt atmosphere (corrosion)	X	3.25	4.6.20		
Radiographic inspection	X	3.13	4.6.8		
Group IV					
Shock (specified pulse)	X	3.27	4.6.22		
Terminal strength	X	3.28	4.6.23		
Moisture resistance	X	3.29	4.6.24	10	
Seal (when applicable)	X	3.14	4.6.9		1
Radiographic inspection	X	3.13	4.6.8		
Group V					
Life	X	3.31	4.6.26	10	
Group VI					
Solderability	X	3.30	4.6.25	5	0

1/ The contractor has the option of performing either the dc voltage drop test or dc resistance test.

* 4.5 In-process inspection and conformance inspection.

* 4.5.1 In-process inspection (class B filters). Each production lot of capacitors manufactured for use in class B filters shall be inspected in accordance with MIL-PRF-31033 and Table IV (see 3.5.7.1).

* TABLE IV. In-process inspection (class B filters).

Inspection	Requirement paragraph	Test method paragraph	Sample size
MIL-PRF-31033 In-process	3.5.7.1a	See MIL-PRF-31033	See MIL-PRF-31033
Destructive physical analysis	3.5.7.1b	See MIL-PRF-31033	See MIL-PRF-31033

* 4.5.2 In-process inspection (class S filters). Each production lot shall be inspected in accordance with table V. Other screening inspections may be applied at the option of the manufacturer, as approved by the qualifying activity.

* TABLE V. In-process inspection (class S filters).

Inspection	Requirement paragraph	Test method paragraph	Sample size
MIL-PRF-31033 In-process	3.5.7.2a	See MIL-PRF-31033	See MIL-PRF-31033
MIL-PRF-31033 group A	3.5.7.2b	See MIL-PRF-31033	See MIL-PRF-31033
MIL-PRF-31033 group B (except life)	3.5.7.2b	See MIL-PRF-31033	See MIL-PRF-31033
Visual inspection	3.6	4.6.1.2	100%

4.5.2.1 Rework of class S filters. Rework of class S filters is not allowed unless the rework procedure has been approved by the qualifying activity. Once a capacitor has been soldered in place, it shall not be reworked.

4.5.3 Inspection of product for delivery.

4.5.3.1 Class B filters. Inspection of product for delivery shall consist of group A inspection.

4.5.3.2 Class S filters. Inspection of product for delivery shall consist of group A and B inspections.

4.5.4 Inspection lot.

4.5.4.1 Class B filters. An inspection lot shall consist of all filters of a single PIN, produced under essentially the same conditions, and offered for inspection at one time.

4.5.4.2 Class S filters. An inspection lot for class S filters shall be of one design. As a minimum requirement, the lot shall consist of all the filters of a single part number representing one design and processed as a single lot through all manufacturing steps on the same equipment, and identified with the same date and lot code designation. In addition, the lot shall conform to the following:

a. Capacitors used in each filter of an inspection lot shall be traceable to one part number and one lot date code (LDC).

b. Each element, such as toroids, ferrite beads, finished cases, end seals, and wire lugs used in the design of the filter shall be from a single manufacturer and traceable to a single lot date code.

c. Solder for each application shall be of a uniform composition from a single supplier.

d. All single process operations shall be done during one continuous run without changes in temperature, pressure, or other processing controls.

e. A lot identifying number shall be assigned at the time the lot is assembled. This identifying number (LDC) shall be maintained through acceptance.

f. The manufacturer shall maintain records on each lot date code. The manufacturer shall record when in-process controls and groups A and B inspections start and when they have been completed.

g. Maximum lot size for broadband type filters shall be 500 pieces.

h. Maximum lot size for high-frequency filters (3 dB cut-off frequency (fc) > 500 kHz) shall be 2,000 pieces.

4.5.5 Group A inspection.

4.5.5.1 Class B filters. Filters shall be subjected to the tests in table VII in the order shown, for class B devices. Subgroup 1 tests shall be performed on 100 percent of the product supplied under this specification to the extent specified. Filters failing the tests of subgroup 1 shall be removed from the lot. Lots having more than 10 percent total rejects shall not be furnished on the contract or purchase order. Failures from radiographic inspection shall be removed from the lot and shall not be counted as rejects. Failures from the seal test shall not be counted toward the total rejects. However, if the number of seal test failures exceeds 10 percent, the lot shall be rejected. If the number of seal test failures does not exceed 10 percent, then these failures may be reworked and retested to the subgroup 1 tests. For subgroup 2, a sample of parts from each inspection lot shall be randomly selected in accordance with table VIII. There shall be no failures allowed. For subgroup 3, five samples shall be selected at random from each inspection lot. Test samples for the solderability test may be selected from subgroup 1 electrical failures. There shall be no failures allowed.

4.5.5.1.1 Rejected lots (subgroup 2). If an inspection lot is rejected, the contractor may rework the lot to correct the defects or screen out the defective units, and resubmit the lot for inspection. Samples shall be randomly selected in accordance with table VIII. If one or more defects are found, the lot shall be rejected and shall not be supplied to this specification.

4.5.5.1.2 Rejected lots (subgroup 3). If an inspection lot is rejected, the contractor may use one of the following options to rework the lot:

a. Each production lot that was used to form the failed inspection lot shall be individually submitted to the solderability test. Production lots that pass the solderability test are available for shipment. Production lots failing the solderability test can be reworked if submitted to the solder dip procedure in b.

b. The manufacturer submits the failed lot to a 100 percent solder dip using an approved process in accordance with 3.5.4. Following the solder dip, the electrical measurements required in group A, subgroup 1 tests shall be repeated on 100 percent of the lot (seal test shall also be performed on hermetically sealed filters). The PDA shall be as for the subgroup 1 tests. Five additional samples shall then be selected and subjected to the solderability test with no failures allowed. If the lot fails this solderability test, the lot may be reworked a second time and shall be retested. If the lot fails the solderability test after the second rework, the lot shall be rejected and shall not be furnished against the requirements of this specification.

4.5.5.1.2.1 Disposition of samples. The solderability test is considered a destructive test and samples submitted to the solderability test shall not be supplied on the contract.

4.5.5.2 Class S filters. Filters shall be subjected to the tests specified in table VII, in the order shown, for class S devices. Subgroup 1 tests shall be performed on 100 percent of the product supplied under this specification. For the thermal shock, voltage conditioning, insulation resistance and dielectric withstanding tests the PDA for each test shall be 2 percent maximum (Note: During the last 50 hours of the voltage conditioning test the percent defective allowed shall be 0.2 percent maximum or one unit, see 4.6.2.2.2e). For the capacitance, voltage drop, and insertion loss tests the PDA shall be 3 percent maximum. Lots having more than 10 percent total rejects shall not be furnished on contracts. Failures from the radiographic inspection and fine leak seal test shall be removed from the lot and shall not be counted as rejects. Failures from the gross leak seal test shall not be counted toward the total rejects. However, if the number of gross leak seal test failures exceeds 10 percent, the lot shall be rejected. If the number of gross leak seal test failures does not exceed 10 percent, then these failures may be reworked and retested to the subgroup 1 tests. For subgroup 2, a sample of parts from each inspection lot shall be randomly selected in accordance with table VIII. There shall be no failures allowed. For subgroup 3, five samples shall be selected at random from each inspection lot. Test samples for the solderability test may be selected from subgroup 1 electrical failures. There shall be no failures allowed.

4.5.5.2.1 Rejected lots (subgroup 2). Any sample failure in subgroup 2 tests shall require a 100 percent reinspection of the lot for those tests that the parts failed.

4.5.5.2.2 Rejected lots (subgroup 3). If an inspection lot is rejected, the contractor may rework the lot as follows:

Submit the failed lot to a 100 percent solder dip using an approved process in accordance with 3.5.4. Following the solder dip, the electrical measurements required in group A, subgroup 1 tests shall be repeated on 100 percent of the lot (seal test shall also be performed on hermetically sealed filters). The PDA shall be as specified for the subgroup 1 tests. Five additional samples shall then be selected and subjected to the solderability test with no failures allowed. If the lot fails the solderability test, the lot may be reworked a second time and shall be retested. If the lot fails the solderability test after the second rework, the lot shall be rejected and shall not be furnished against the requirements of this specification.

4.5.5.2.2.1 Disposition of samples. The solderability test is considered a destructive test and samples submitted to the solderability test shall not be supplied on the contract.

TABLE VII. Group A inspection.

Inspection	Class		Requirement paragraph	Test method paragraph	Sampling procedure
	B	S			
Subgroup 1					
Thermal shock and voltage conditioning	X	X	3.7	4.6.2	
Dielectric withstanding voltage	X	X	3.8	4.6.3	
Insulation resistance (at +25°C)	X	X	3.18	4.6.13	
Capacitance to ground and dissipation factor	X	X	3.9	4.6.4	100% inspection
Insertion loss (at +25°C)	X	X	3.10	4.6.5	
DC resistance 1/ 2/	X	X	3.12	4.6.7	
DC voltage drop 1/ 2/	X	X	3.11	4.6.6.2	
Radiographic inspection	X	X	3.13	4.6.8	
Seal (when applicable)	X	X	3.14	4.6.9	
Subgroup 2					
Visual and mechanical inspection	X	X	3.5, 3.33 and 3.35	4.6.1.1	Table VIII
Subgroup 3					
Solderability	X	X	3.30	4.6.25	See 4.5.5.1 and 4.5.5.2

1/ The contractor has the option of performing either the dc voltage drop test or the dc resistance test.

* 2/ The dc rated solid straight lead-through devices of MIL-PRF-28861/1 and MIL-PRF-28861/6 shall be inspected on a sample basis using table VIII.

TABLE VIII. Sampling plan.

Lot size	Sample size
2 to 13	100%
14 to 50	13
51 to 90	13
91 to 150	13
151 to 280	20
281 to 500	29
501 to 1200	34
1201 to 3200	42
3201 to 10000	50

4.5.6 Group B inspection. Group B inspection shall consist of the inspections specified in table IX in the order shown. For class B filters, the group B inspection shall be made on sample units selected at random from inspection lots which have passed group A inspection. For class S filters, the group B inspection shall be performed on sample units selected at random from the inspection lot that has passed group A inspection.

4.5.6.1 Sampling plan.

4.5.6.1.1 Class B filters.

4.5.6.1.1.1 Quarterly. Every quarter, 25 sample units of each style shall be subjected to the tests of group I. Twenty samples shall be representative of production in the period. The remaining five samples shall be that PIN highest on the qualification hierarchy which was produced during the period.

4.5.6.1.1.2 Quarterly. Every quarter, 19 sample units of each style shall be subjected to the tests of group II. The ten samples submitted for the subgroup 1 tests shall be that PIN highest on the qualification hierarchy produced during the period. Five sample units of any current rating for each style shall be subjected to the tests of subgroup 2. Four sample units of any current rating shall be subjected to the tests of subgroup 3.

4.5.6.1.1.3 Semiannually. Every 6 months, ten sample units of any current rating for each style shall be subjected to the tests of group III.

4.5.6.1.2 Class S filters. Samples shall be submitted for group B inspection in accordance with table IX. The samples shall be divided into groups as specified in table IX and subjected to the specified tests.

4.5.6.2 Failures. If the number of failures exceeds the number allowed in table IX, the sample shall be considered to have failed.

4.5.6.3 Disposition of sample units. Sample units that have been subjected to group B inspection shall not be delivered on the contract or purchase order. The samples shall be maintained with relative data and traceability for not less than 5 years.

4.5.6.4.1 Class B filters. If a sample fails to pass group B inspection, the manufacturer shall immediately notify the qualifying activity and the cognizant inspection activity of such failure and take corrective action on the materials or processes, or both, as warranted, and on all units of product which can be corrected and which were manufactured under essentially the same conditions, with essentially the same materials, processes, etc., and which are considered subject to the same failure. Acceptance and shipment of the product shall be discontinued until corrective action acceptable to the qualifying activity has been taken. After the corrective action has been taken, group B inspection shall be repeated on additional sample units (all inspections, or the inspection which the original sample failed, at the option of the qualifying activity). Group A inspection may be reinstituted; however, final acceptance and shipment shall be withheld until the group B inspection has shown that the corrective action was successful. In the event of failure after reinspection, information concerning the failure shall be furnished to the cognizant inspection activity and the qualifying activity.

* 4.5.6.4.2 Class S filters. If an inspection lot fails to pass group B inspection, the inspection lot shall not be delivered on the contract or purchase order. The manufacturer shall immediately notify the qualifying activity and cognizant inspection activity of the failure and take corrective action on the materials or processes, or both as warranted. A failure analysis (see 4.5.6.4.2.1) shall be performed on the failing product and forwarded to the qualifying activity. A copy of the results shall be maintained by the manufacturer. If three successive lots of any style of filter or three successive lots of a single style of filter fail conformance testing (groups A and B), the qualifying activity shall be notified within 96 hours and the qualifying activity, at its discretion, may remove the failing product from the qualified products list.

4.5.6.4.2.1 Failure analysis. If any of the sample units subjected to the group B tests fail during testing, a detailed failure analysis shall be conducted to establish the cause of failure and the corrective actions that would eliminate subsequent failures of a similar type. A failure is categorized as lot oriented if its occurrence is apparently related to an identified lot or lots. A failure is categorized as not lot oriented if its occurrence is random and it cannot be related to a specific lot or lots. Each failure is further identified as screenable or not screenable from the completed production items. If the failure analysis shows that the failure mechanism is screenable, the entire failed lot may be screened and the group B test in which the failure occurred shall be repeated. If a failure occurs during the second group B test, the entire production lot shall be rejected. If the failure mechanism is screenable, all prior and subsequent production lots that may contain the identified failure mechanism shall also be screened. Except as may be stated otherwise in the detailed requirements for the specific part type (see 3.1), if the failure mechanism is lot oriented and not screenable, all production lots that may contain the identified failure mechanism shall be rejected unless other disposition is directed by the contracting officer and qualifying activity.

* 4.5.7 Certification. The manufacturer shall certify with each order of parts, that the applicable conformance tests were successfully completed.

TABLE IX. Group B inspection.

Inspection	Class		Requirement paragraph	Test method paragraph	No. samples required		Failures permitted	
					Class		Class	
	B	S			B	S	B	S
Group I								
AC voltage drop (when applicable)	X	X	3.11	4.6.6.1				
Voltage and temperature limits of capacitance	X	X	3.15	4.6.10				
Insertion loss (at temperature)	X	X	3.10	4.6.5.1				
Barometric pressure (reduced)	X	X	3.17	4.6.12				
Temperature rise	X	X	3.16	4.6.11	25	5	2	0
Current overload	X	X	3.19	4.6.14				
Terminal strength	X	X	3.28	4.6.23				
Thermal shock and immersion	X	X	3.23	4.6.18				
Destructive physical analysis (2 samples only)	-	X	3.26	4.6.21				
Group II								
Subgroup 1								
Life	X	X	3.31	4.6.26	10	22 1/		0
Subgroup 2								
Resistance to soldering heat	X	X	3.24	4.6.19				
Salt atmosphere (corrosion)	X	X	3.25	4.6.20				
Radiographic inspection	X	X	3.13	4.6.8	5	5	1	0
Destructive physical analysis (2 samples only)	-	X	3.26	4.6.21				
Subgroup 3								
Resistance to solvents	X	X	3.20	4.6.15	4	4		0
Group III								
Shock (specified pulse)	X	X	3.27	4.6.22				
Vibration (high frequency)	X	X	3.21	4.6.16				
Random vibration	-	X	3.22	4.6.17	10	5	1	0
Moisture resistance	X	X	3.29	4.6.24				
Seal (when applicable)	X	X	3.14	4.6.9				
Radiographic inspection	X	X	3.13	4.6.8				
Destructive physical analysis (2 samples only)	-	X	3.26	4.6.21				

1/ The number of samples submitted for the life test shall be 10 percent of the lot submitted for group A inspection with the maximum number of samples being 22 filters and the minimum number of samples being five filters.

4.6 Methods of inspection.

4.6.1 Visual inspection.

4.6.1.1 External visual and mechanical inspection. Filters shall be examined to verify that the materials, design, construction, physical dimensions, marking, and workmanship are in accordance with the applicable requirements (see 3.1, 3.5, 3.33, and 3.35).

* 4.6.1.2 Visual inspection. Each element and subassembly shall be visually inspected under 10-power magnification. Elements and subassemblies exhibiting any of the anomalies listed below shall be removed from the lot and identified as rejects.

a. Discoidal capacitors. In accordance with MIL-PRF-31033.

b. Magnetics.

(1) Ferrite beads: Broken or cracked ferrites. Chipouts exceeding 10 percent of the cross-sectional area.

(2) Coil: Broken or cracked cores, sharp kinks, bends, or nicks that reduce the diameter of the wire 10 percent.

c. Housing (case): Burrs, damaged threads, flaking of plating, or dents. Minor cosmetic defects and salt atmosphere damage in the thread area (due to torquing into metal plate for thermal shock test) is acceptable.

d. Subassembly and precap inspection prior to potting.

(1) Excessive solder or bridging between inner and outer electrodes that reduce the termination clearance to less than 75 percent of the radial distance between the inner and outer terminations.

(2) Solder balls, solder spikes, solder splash, or loose solder.

(3) Solder flux.

(4) Coil or ferrite bead shall be inspected for anomalies listed in 4.6.1.2b.

(5) Contamination that may affect proper operation.

(6) Damage or plating defects on the case.

(7) Lead damage.

(8) Coil or ferrite bead is not insulated, or is touching side of case.

(9) Coil wire or ferrite bead and filter center conductor are positioned such that they are able to touch the side of the case during vibration or shock.

(10) Capacitor disc is tilted more than 10 degrees.

(11) Solder fillet around either the inner circumference or the outer circumference of the capacitors less than 240 degrees.

(12) For eyelet terminals, the feed-through connection wire not being visible from the external side of the eyelet.

4.6.2 Thermal shock and voltage conditioning (see 3.7). Filters shall be subjected to the tests of 4.6.2.1 and 4.6.2.2.

4.6.2.1 Thermal shock. Filters shall be tested as specified in method 107 of MIL-STD-202. The following details and exceptions shall apply:

a. Test condition A, except that in step 3, sample units shall be tested at +125°C.

b. Mounting (class S filters only). Filters shall be mounted in a through-hole and torqued in place on a rigid metal plate to the specified value (see 3.1). (Note: Not applicable to solder-in types).

c. Measurements during the test (class S filters only). At completion of or during the final cycle and before the filter is removed from the plate, measure and record insulation resistance at +125°C.

4.6.2.2 Voltage conditioning.

4.6.2.2.1 Class B filters. Filters shall be tested as specified in method 108 of MIL-STD-202. The following details and exceptions shall apply:

a. Test temperature and tolerance: +125°C ± 3°C.

b. Operating conditions:

(1) DC rated filter: 2 x rated voltage for 164 ± 4 hours.

(2) For filters with ac and dc ratings, or ac ratings only: Apply 1.2 x rated ac voltage at maximum rated frequency for 164 ± 4 hours.

c. Mounting: Filters shall be mounted in such a way that the specified voltage may be applied between the terminals and case.

d. Measurements after test: Insulation resistance shall be measured as specified in 4.6.13.2 within 24 hours after completion of voltage conditioning.

4.6.2.2.2 Class S filters. Filters shall be tested as specified in method 108 of MIL-STD-202. The following details and exceptions shall apply:

a. Test temperature and tolerance: +125°C ± 3°C.

b. Operating conditions.

(1) DC rated filter: 2 x rated voltage.

(2) Filters with ac and dc ratings, or ac ratings only: 1.2 x rated ac voltage at maximum rated frequency.

(3) Polarity of voltage: The polarity of the voltage shall be positive on the case during the first 24 to 72 hours and then reversed to negative on the case for the remaining portion of the test.

c. Mounting: Filters shall be mounted in such a way that the specified voltage may be applied between the terminals and case. The method of electrically contacting the case and one terminal of the filter must be adequate to ensure that all the filters will be properly conditioned.

d. Test circuit: The test circuit shall be equivalent to that shown on figure 1. The maximum series resistance with each filter shall be 5.00 ohms. The fuse shall have a maximum rating of 0.25 ampere. The power supply shall be capable of supplying five times the maximum current rating of the fuse.

e. Test duration: Filters shall be conditioned for a minimum of 168 hours and a maximum of 264 hours. The voltage conditioning may be terminated at any time during the 168 to 264 hours time interval provided that failures (blown fuses or less than 95 percent applied voltage) in the lot do not exceed 0.2 percent or one unit (whichever is more) during the last 50 hours. Filters that cause fuses to blow shall be considered as failures. Any filter that causes a blown fuse shall be tested for insulation resistance and dielectric withstanding voltage as specified in 4.6.13 and 4.6.3, respectively. If the filter meets the initial requirements for insulation resistance and dielectric withstanding voltage, the filter shall be rejected but shall not count against the percent defective allowed.

f. Measurements after test: Insulation resistance shall be measured as specified in 4.6.13.2 within 24 hours after completion of the voltage conditioning.

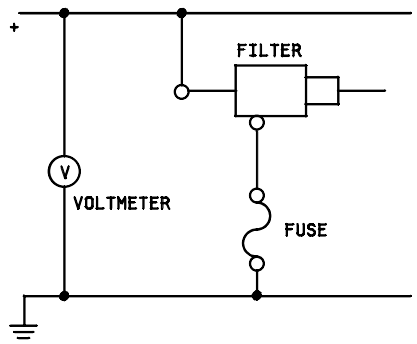

FIGURE 1. Voltage conditioning test circuit for class S filters.

4.6.2.2.3 Optional voltage conditioning. The manufacturer, with approval from the qualifying activity, may perform an optional voltage conditioning procedure in lieu of the procedures specified in 4.6.2.2.1 or 4.6.2.2.2. All conditions of 4.6.2.2.1 or 4.6.2.2.2 shall apply with the exception of the applied voltage and test time. The minimum time duration, $T_{(test)}$, shall be calculated as follows:

$$T_{(test)} = \frac{1344}{(E_{(test)}/E_{(rated)})^3}$$

Where: $2 \times E_{(rated)} \leq E_{(test)} \leq 4 \times E_{(rated)}$

$T_{(test)}$ = Minimum test time in hours

$E_{(test)}$ = Applied voltage

$E_{(rated)}$ = Rated voltage of filter

(Note: This optional voltage conditioning procedure may not be used on filters with voltage ratings greater than 200 volts).

4.6.3 Dielectric withstanding voltage (see 3.8). Filters shall be tested in accordance with method 301 of MIL-STD-202. The following details and exceptions shall apply:

a. Test voltage: Unless otherwise specified (see 3.1), the test voltage shall be as follows:

(1) DC rated filters: 2.5 x rated voltage.

(2) For filters with ac and dc ratings: 2.5 x rated dc voltage. For filters with ac ratings only: 2.8 x rated rms voltage.

b. Duration of application of test voltage: 5 seconds minimum, 1 minute maximum.

c. Points of application of the test voltage: The test voltage shall be applied between either terminal and ground (case).

d. Charging current: 50 mA maximum.

e. The sensitivity of the breakdown test equipment shall be sufficient to indicate breakdown when at least 0.5 milliamperes of leakage current flows through the filter under test.

4.6.4 Capacitance to ground and dissipation factor (see 3.9).

4.6.4.1 Capacitance to ground. Capacitance shall be tested in accordance with method 305 of MIL-STD-202. The following details and exceptions shall apply:

a. Test frequency: 1 MHz $\pm$ 100 kHz when the nominal capacitance is 100 pF or less, and 1 kHz $\pm$ 100 Hz when the nominal capacitance is greater than 100 pF.

b. Voltage: A root-mean-square potential of 1.0 $\pm$ 0.2 volt when no polarizing voltage is applied.

(Note: Following a dielectric withstanding voltage or insulation resistance test, the capacitance measurement may be delayed for a period of up to 24 hours.)

4.6.4.2 Dissipation factor. Unless otherwise specified (see 3.1), the dissipation factor shall be measured with a capacitance bridge or other suitable method at the frequency and voltage specified in 4.6.4.1. The inherent accuracy of the measurement shall be $\pm$ 2 percent of the reading plus 0.1 percent dissipation factor (absolute) unless otherwise specified. Suitable measurement techniques shall be used to minimize errors due to the connections between the measuring apparatus and the filter. When testing multi-element filters, the effect of series element impedances on capacitance and dissipation factor readings must be considered. Typically, when measuring high current devices, this effect is insignificant. However, in some cases, the following test modifications may be required:

L filters: Orient the filter so that the capacitor faces the test points.

Pi filters: Electrically bridge the two live terminals.

T filters: Electrically bridge the two live terminals. (This will reduce, but not eliminate, the effect.)

4.6.5 Insertion loss (at +25°C) (see 3.10). Filters shall be tested in accordance with MIL-STD-220 or to an approved equivalent at load and at no-load as specified (see 3.1). With only the 10 dB pads, adapters and fixture in the circuit, 0 dB reference shall have no more than $\pm$ 1 dB error and the measurements shall be accurate to within $\pm$ 3 dB over the specified frequency to 1 GHz.

4.6.5.1 Insertion loss (at temperature). This test may be conducted in conjunction with the capacitance measurement (temperature and voltage) provided the insertion loss is read before the dc bias is applied at each temperature. Filters shall be tested as follows:

a. The filters shall be located with an appropriate adaptor in a temperature chamber.

b. Load and no-load measurements shall be made at -55°C, +25°C, and +125°C. Measurements shall be taken at a sufficient number of frequencies to plot a curve of insertion loss versus frequency over the specified frequency range for each temperature. Alternatively, photographs of the display of a spectrum analyzer or chart recordings may be used.

4.6.6 Voltage drop (see 3.11).

4.6.6.1 Voltage drop for ac filters. The voltage drop is the difference between the input voltage to the filter and the output voltage of the filter when the filter is carrying rated current at rated voltage, with a resistive load at maximum rated frequency (see 3.1). The method of voltage measurement is shown on figure 2. Measurements shall be made by using equipment that will enable voltage differences of less than 0.1 volt to be read.

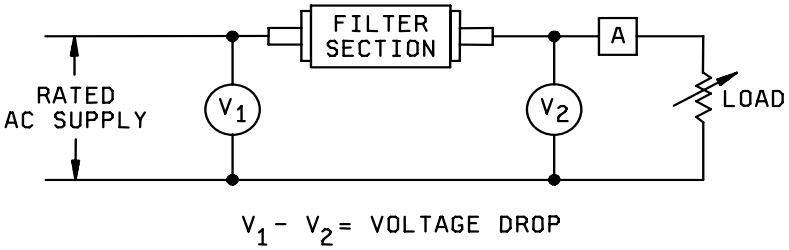

FIGURE 2. AC filters; measurement of voltage drop.

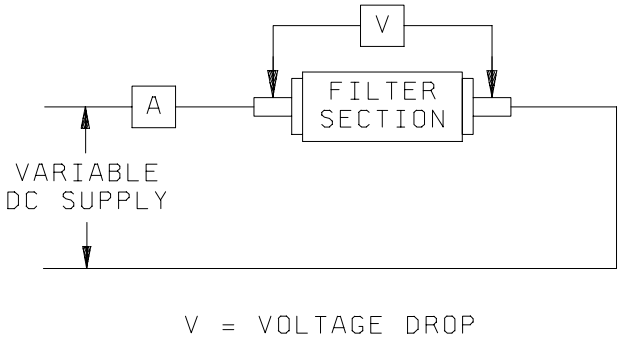

FIGURE 3. DC filters; measurement of series-element voltage drop at rated current.

4.6.6.2 Voltage drop for dc filters. The voltage drop shall be determined in accordance with figure 3. Measurements shall be made by using a dc reading meter with the filter carrying rated current. At the manufacturer's option, dc resistance can be measured as specified in 4.6.7. The equivalent dc voltage drop can then be calculated.

4.6.7 DC resistance (see 3.12). Filters shall be tested in accordance with method 303 of MIL-STD-202. Test is optional when a dc voltage drop test is performed.

4.6.8 Radiographic inspection (see 3.13). Filters shall be tested in accordance with method 209 of MIL-STD-202. The following details and exceptions shall apply:

a. Radiographic quality: The radiograph shall render a clear sharp image of the penetrameter.

b. Image quality indicator: A radiograph of the penetrameter shall be included on each radiograph film. The penetrameter may be made from a sample filter of the same type as the filter being radiographed, with an AWG number 48 tungsten wire mounted across the filter body.

c. Positions of specimen: Two views normal to the major axis of the part shall be taken. One view shall be 90 degrees from the other.

d. Evaluation of images: Special kinds of viewing equipment; magnifying glass of 10X magnification or a 7X optical comparator.

e. Examination: The filter inspection shall include, but not be limited to, inspection for faulty lead connections, misalignments of internal parts, solder defects, and physical damage of electrical elements. Typical filter construction of a circuit filter is shown on figure 4.

(1) Extraneous material.

(a) Solder which is firmly attached to the center conductor or case with a wetting angle $> 45°$ is cause for rejection (see figure 7). Unattached solder balls and particles are unacceptable when:

(1) Not firmly imbedded in potting material.

(2) The clearance between line and ground potential is less than .010 inch (0.25 mm).

(b) There shall be no solder splash on the winding or the capacitor. For defect example, see figure 5d.

(c) Total lack of solder on one side of a capacitor in each of two views or total lack of solder on two sides of a capacitor in one view is cause for rejection.

(d) There shall be no metallic objects bridging the coil to the capacitor, nor contact between coil and capacitor. For defect example, see figures 6a and 6b.

(e) There shall be no solder bridge or metallic objects between the capacitor and the ferrite bead.

(2) Internal damage: There shall be no nicks, gouges, cracks, or other imperfections in the wire, core, capacitor, or other internal elements. For defect example, see figures 6d, 6e, and 6f.

(3) Alignment of capacitors: The capacitor element shall be properly seated within its defined location and shall not be tilted or misaligned more than 10 degrees with respect to the case centerline. For defect example, see figure 6g.

(4) Bonds: There shall be no evidence of improper bonding (defective welds) on internal lead connections.

4.6.9 Seal (hermetically sealed filters only) (see 3.14). Filters shall be tested in accordance with method 112 of MIL-STD-202. The following details shall apply:

a. Class B filters: Filters shall be tested in accordance with test condition A or D.

b. Class S filters: Filters shall be tested in accordance with test condition C, procedure IIIa. Following this test, filters shall be tested in accordance with test condition A or D.

4.6.10 Voltage and temperature limits of capacitance (see 3.15). This test may be performed in conjunction with the insertion-loss (at temperature) test, see 4.6.5.1. The test conditions and capacitance measurements shall be in accordance with 4.6.4, except that the chamber temperature shall be accurate to $\pm$ 2°C. After an initial capacitance measurement at +25°C, a dc voltage equivalent to the rated dc voltage or 1.4 times the rated rms voltage shall be applied to the filters as the capacitance is measured. (Note: The dc voltage shall not exceed 500 V dc and the terminals shall be positive with respect to the case.) The capacitance shall then be measured at -55°C, -30°C, +25°C, +85°C, and +125°C. (Note: The filters shall be stabilized for a minimum of 30 minutes at each temperature before a measurement is taken.)

4.6.11 Temperature rise (see 3.16). Filters shall be suspended by their terminals and energized with rated current at maximum rated frequency (see 3.1) in still air. Lead wires shall be of copper, 6-inches long (152.4 mm), and of the size specified in table X. After thermal stability has been reached and while the filter is still energized, the maximum hotspot on the filter case shall be determined by the use of thermocouples. Lead wires specified in accordance with table X, shall be the smaller of the wire specified in accordance with table X or the actual lead wire size of the filter terminal.

TABLE X. Maximum lead wire sizes.

Rated current of filter	Wire size
Amperes	AWG
Up to 3	24
3+ to 5	22
5+ to 11	20
11+ to 16	18
16+ to 22	16
22+ to 32	14

4.6.12 Barometric pressure (reduced) (see 3.17). Filters shall be tested in accordance with method 105 of MIL-STD-202. The following details shall apply:

a. Method of mounting: Securely fastened by normal mounting means.

b. Test condition letter E (150,000 feet).

c. Test during subjection to reduced pressure: Dielectric withstanding voltage as specified, except that the test voltage shall be 125 percent of the rated voltage.

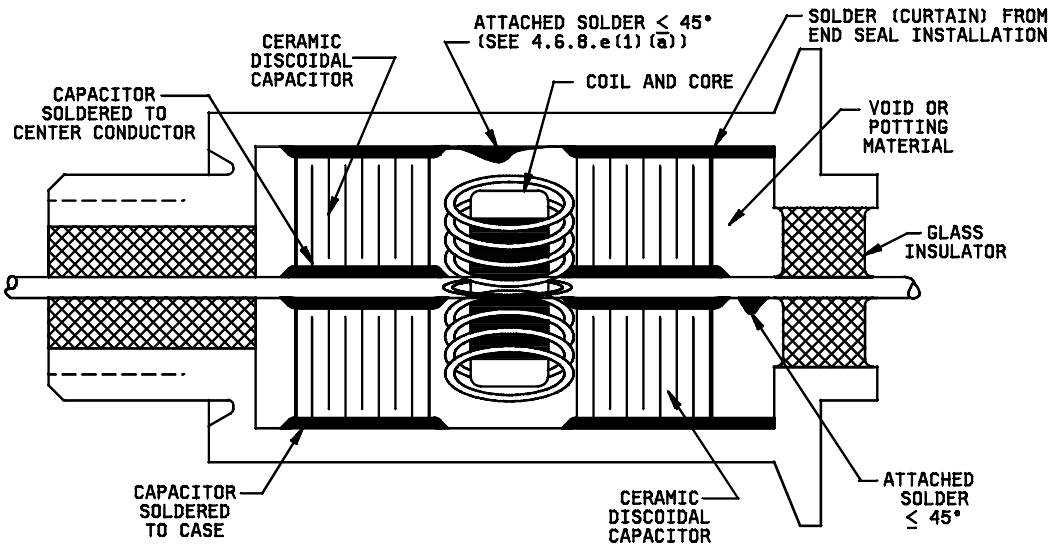

FIGURE 4. Typical acceptable π filter construction.

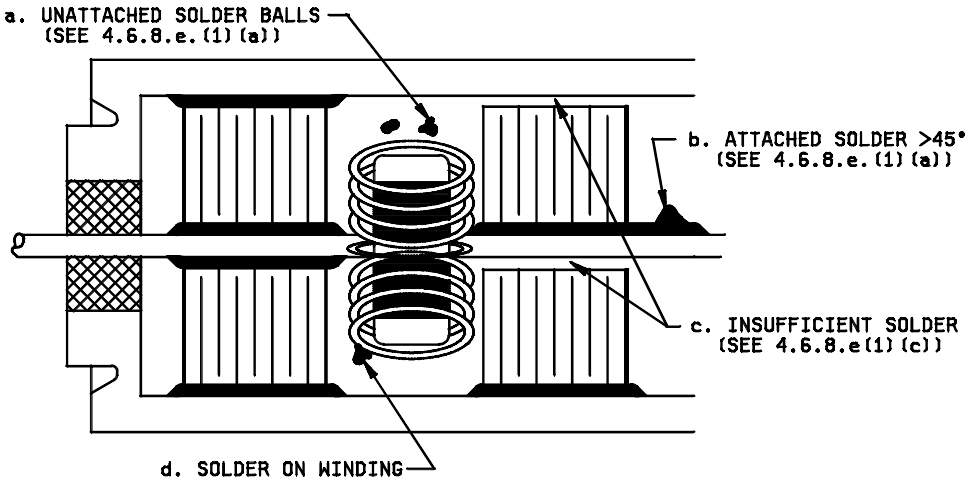

FIGURE 5. Typical π filter construction and examples of unacceptable filter workmanship.

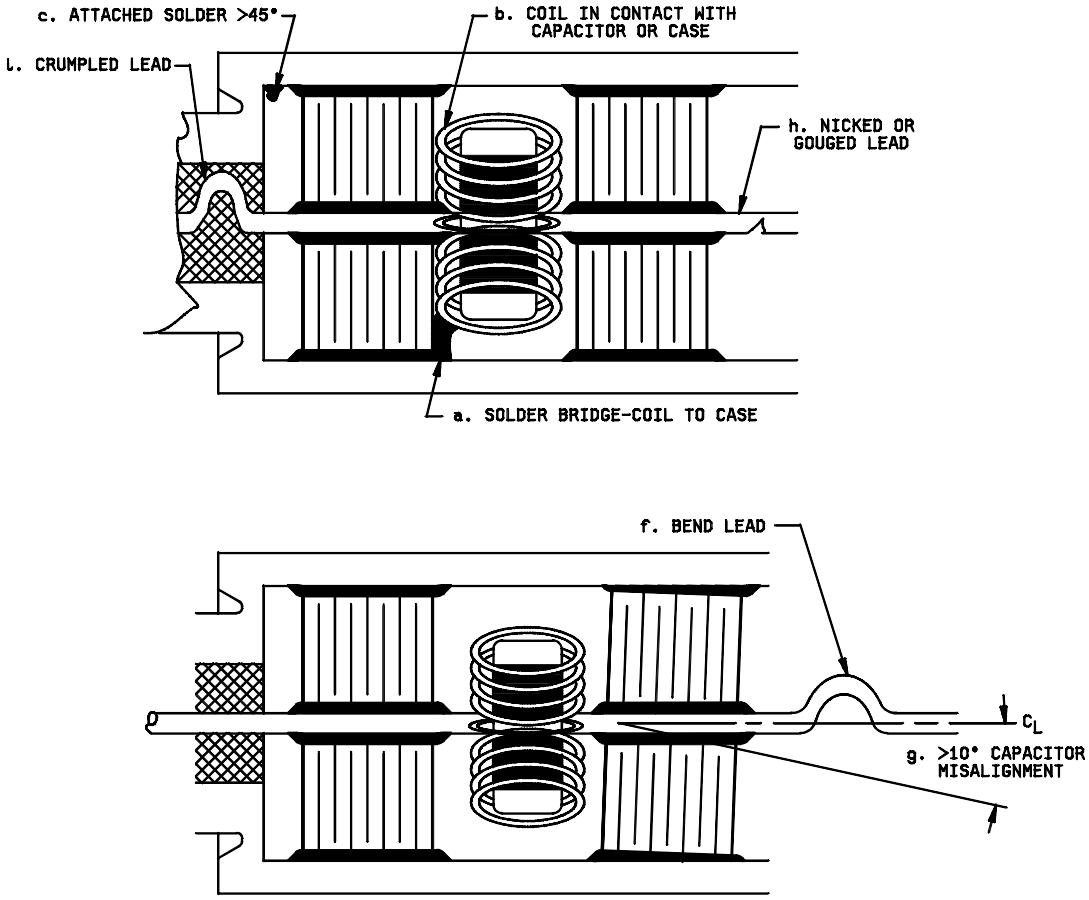

FIGURE 6. Typical π filter construction and examples of unacceptable filter workmanship.

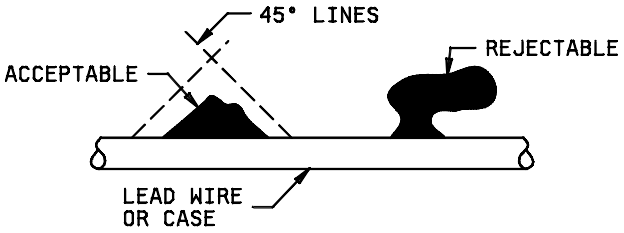

FIGURE 7. Wetting angle of attached solder.

4.6.13 Insulation resistance (terminal to ground) (see 3.18).

4.6.13.1 Insulation resistance (+25°C). Filters shall be tested in accordance with method 302 of MIL-STD-202. The following details and exceptions shall apply:

a. Ambient temperature: +25°C ± 3°C.

b. Test potential: Rated dc voltage, applied for 2 minutes maximum. Charging current: 50 mA maximum.

c. Relative humidity: 20 to 50 percent.

d. Points of measurement: Between either terminal and ground (case).

e. At the manufacturer's option, measurements at +25°C can be made of the dc leakage current at the specified test voltage. The equivalent insulation resistance can then be calculated.

4.6.13.2 Insulation resistance (+125°C). Filters shall be tested in accordance with method 302 of MIL-STD-202. The following details and exceptions shall apply:

a. Test temperature: +125°C ± 3°C.

b. Filters shall be stabilized at +125°C ± 3°C.

c. Insulation resistance distribution (class S high frequency bolt style and solder-in style filters only): Following the voltage conditioning test specified in the group A inspection and measurement of insulation resistance at +125°C as specified in 4.6.13.2a and 4.6.13.2b, a mean and standard deviation shall be calculated for the lot based on the first 50 pieces that meet the minimum insulation resistance requirement. All remaining parts in the lot that have an insulation resistance value less than 3 sigma below the mean shall not be delivered. These units may, at the option of the manufacturer, be used for group B tests. (Note: Only parts failing the minimum insulation resistance requirement shall be counted as part of the percent defective allowed.)

d. Test potential: Rated dc voltage, applied for two minutes maximum. Charging current: 50 mA maximum.

e. At the manufacturer's option, measurements at +125°C can be made of the dc leakage current at the specified test voltage. The equivalent insulation resistance can then be calculated.

4.6.14 Current overload (see 3.19). Filters shall be suspended by their conductors in free air. A current equal to 140 percent of rated current at maximum rated frequency shall then be applied for 15 minutes minimum. After the filter has returned to room temperature, the insulation resistance (at +25°C) and voltage drop shall be measured as specified in 4.6.13.1 and 4.6.6, respectively. Filters shall be visually inspected for evidence of physical damage.

4.6.15 Resistance to solvents (see 3.20). Filters shall be tested in accordance with method 215 of MIL-STD-202. The following details shall apply:

a. The marked portion of the filter body shall be brushed.

b. Filters shall be visually inspected for evidence of mechanical damage and legibility of marking.

4.6.16 Vibration (high frequency) (see 3.21). Filters shall be tested in accordance with method 204 of MIL-STD-202. The following details and exceptions shall apply:

a. Mounting of specimens: Filters shall be rigidly mounted by the body.

b. Electrical load: DC rated voltage and current shall be applied continuously during vibration.

c. Test condition E (50 g's) except the frequency range shall be 20 to 3,000 Hz.

d. Test during vibration to determine intermittent open or short-circuiting.

e. Examination after test: Filters shall be inspected for evidence of physical damage.

f. Measurements after test (Group B inspection only): Class B filters shall be subjected to the insertion-loss test (see 4.6.5).

4.6.17 Random vibration (see 3.22). Filters shall be tested in accordance with method 214 of MIL-STD-202. The following details and exceptions shall apply:

a. Mounting of specimens: Filters shall be rigidly mounted by the body.

b. Electrical load: DC rated voltage and current shall be applied continuously during vibration.

c. Test condition: (I-C for class B; I-F for class S.) The test shall be conducted for 1½ hours in each of three mutually perpendicular directions.

d. During vibration filters shall be monitored to determine intermittent open and short-circuiting. Detecting equipment shall be sufficiently sensitive to detect any interruption of 0.5 ms or greater duration.

e. Examination after test: Filters shall be inspected for evidence of physical damage.

f. Measurements after test: Filters shall be subjected to the insertion-loss test (see 4.6.5).

4.6.18 Thermal shock and immersion (hermetically sealed filters only) (see 3.23).

4.6.18.1 Thermal shock. Filters shall be tested in accordance with method 107 of MIL-STD-202. The following details and exceptions shall apply:

a. Test condition.

(1) Class B: Test condition A, except step 3 temperature shall be +125°C +3°C, -0°C.

(2) Class S: Test condition A-1, except step 3 temperature shall be +125°C +3°C, -0°C.

b. Measurements before and after cycling: Not applicable.

4.6.18.2 Immersion. Following thermal shock, filters shall be tested in accordance with method 104 of MIL-STD-202. The following details shall apply:

a. Test condition A.

b. Measurements after final cycle: Dielectric withstanding voltage with 90 percent of the voltage specified in 4.6.3 applied for 5 ± 1 second, insulation resistance (at +25°C), and insertion loss as specified in 4.6.13 and 4.6.5, respectively.

c. Visual inspection: After the test, filters shall be visually inspected for corrosion and obliteration of marking.

* 4.6.19 Resistance to soldering heat (see 3.24). Filters shall be tested in accordance with method 210 of MIL-STD-202, the following details shall apply:

a. Depth of immersion in the molten solder shall be to a point 0.0625 ± 0.031 inch (1.59 ± 0.79 mm) from the case.

b. Test condition letter B.

c. Cooling time prior to final examinations and measurements: Sufficient time shall be allowed for the filters to stabilize at room ambient temperature. Filters shall then be examined for evidence of physical damage and Insertion loss (25°C) and insulation resistance (25°C) shall be measured in accordance with 4.6.5 and 4.6.13 respectively.

* 4.6.20 Salt atmosphere (corrosion) (see 3.25). Filters shall be tested in accordance with method 101 of MIL-STD-202. The following details and exceptions shall apply:

a. Test condition A (96 hours).

b. Visual inspection: After completion of the test, filters shall be visually inspected for corrosion and obliteration of marking.

* 4.6.21 Destructive physical analysis (see 3.26). Filters shall be inspected in accordance with appendix B of this specification.

4.6.22 Shock (specified pulse) (see 3.27). Filters shall be tested in accordance with method 213 of MIL-STD-202. The following details and exceptions shall apply:

a. Mounting: Securely fastened by normal mounting means; when applicable, leads and connecting wires must be supported to prevent damage to the filter.

b. Test condition.

(1) Class B filters: Test condition I (100 g's).

(2) Class S filters: Test condition F (1,500 g's).

c. Electrical load during shock: During the test, a potential of 100 percent of dc rated voltage shall be applied between the terminals and case.

d. Measurements during test: Monitor for intermittent open- or short-circuiting.

e. Measurements after the test (Qualification inspection only): Filters shall be subjected to the insertion-loss test (see 4.6.5).

4.6.23 Terminal strength (see 3.28). Filters shall be tested in accordance with method 211 of MIL-STD-202. The following details and exceptions shall apply:

a. Test condition A (pull test).

b. Applied force: 5 pounds.

c. Inspection after test: Filters shall be visually inspected for evidence of loosening or rupturing of the terminals.

4.6.24 Moisture resistance (hermetically sealed filters only) (see 3.29). Filters shall be tested in accordance with method 107 of MIL-STD-202, test condition A (except at step 3 temperature shall be +125°C +3°C, -0°C) and no measurements shall be made before and after cycling. Filters shall then be tested in accordance with method 106 of MIL-STD-202. The following details and exceptions shall apply:

a. Mounting: Securely fastened by normal mounting means.

b. Initial measurements: Not applicable.

c. Polarization voltage: During steps 1 to 6, inclusive, a dc potential of 100 volts or rated voltage, whichever is less shall be applied between the terminals and case. The potential applied to the terminals shall be positive with respect to the case.

d. Final measurements: Following the 24-hour conditioning period, dielectric withstanding voltage with 90 percent of the voltage specified in 4.6.3 applied for 5 ± 1 seconds, insulation resistance (at +25°C), and insertion loss shall be measured as specified in 4.6.13 and 4.6.5, respectively.

e. Visual inspection: After the test, filters shall be visually inspected for corrosion and obliteration of marking.

4.6.25 Solderability (see 3.30).

4.6.25.1 Solderability of terminals. Filters shall be tested in accordance with method 208 of MIL-STD-202. The following details and exceptions shall apply:

a. Number of terminations to be tested: 2.

b. Special preparations of terminations: None.

4.6.25.2 Solderability of mounting termination (when applicable). Filters shall be tested as follows: (Note: The terminal solderability test (see 4.6.25.1) should be done with the filters already soldered to the test coupon; however, if the size of the solder pot or variations in the terminal preclude this sequence, the terminal solderability may be done first).

a. Filters shall be soldered to the test coupon shown on figure 8. The filters shall be soldered with an iron at +253°C ± 7°C using PB36AWB6 or PB36AWB7 solder in accordance with J-STD-006. The test coupon shall be preheated to +100°C ± 7°C. Heat should be applied to the coupon first in the immediate vicinity of the filter. The tip of the iron should then be moved so that it comes in contact with the edge of the filter for no more than 5 seconds or until a smooth solder fillet has been established around the filter. This sequence will be repeated with each filter.

b. Test coupon: Shall be in accordance with figure 8 and as follows:

(1) Material: Brass in accordance with ASTM B 16, copper alloy UNS No. C36000, 1/2 hard or, brass in accordance with ASTM B 36, copper alloy UNS No. C26000, ½ hard; 0.014 ± 0.002 inch (0.36 ± 0.05 mm) thick.

* (2) Finish: Copper plate in accordance with SAE-AMS2418-1 and tin plate in accordance with ASTM B 545, class B.

(3) Dimensions: In accordance with figure 8 and as follows:

"a" = recommended mounting hole diameter as specified (see 3.1).

"b" = 2 times the maximum filter body diameter.

"c" = "b" or 0.50 inch (12.70 mm), whichever is greater.

c. Measurements after test: Insulation resistance (+25°C) and capacitance shall be measured as specified in 4.6.13.1 and 4.6.4 while the filters are on the test coupon.

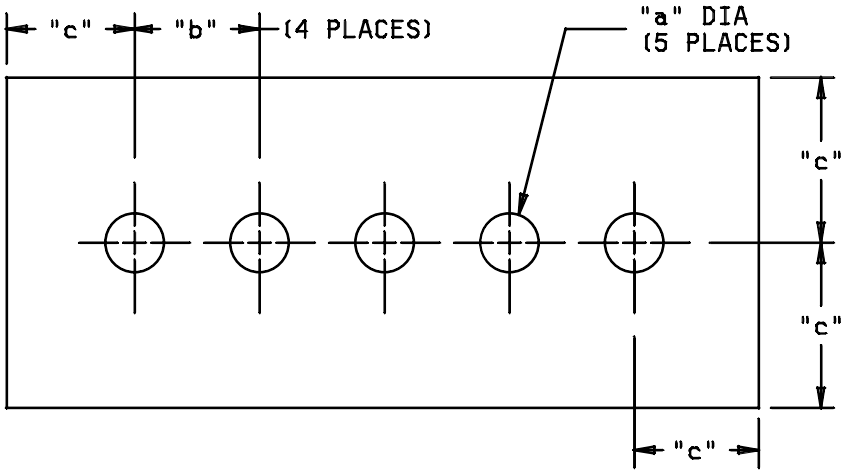

FIGURE 8. Test coupon for solderability of mounting terminations.

4.6.26 Life (see 3.31). Filters shall be tested in accordance with method 108 of MIL-STD-202. The following details and exceptions shall apply:

a. The filters shall be separated from each other by a distance of not less than 1 inch (25.4 mm) during measurements.

b. Test temperature and tolerance: +125°C ± 3°C.

c. Mounting: Filters shall be mounted in a through-hole and torqued in place on a rigid plate to the specified value (see 3.1).

d. Test condition letter D (1,000 hours).

e. Filters shall be energized with rated current at maximum rated frequency.

f. During the test, radiant shields may be placed between units so that overheating of one unit will not affect a nearby unit.

g. Test voltage: For filters with ac and dc ratings or ac ratings only, the test voltage shall be 1.2 times rated ac voltage. Filters with only dc ratings shall be tested at 2.0 times the rated dc voltage.

h. After the life test, dielectric withstanding voltage with 90 percent of the specified voltage applied for 5 $\pm$ 1 seconds, insulation resistance (+25°C and +125°C), and insertion loss shall be measured as specified in 4.6.3, 4.6.13, and 4.6.5, respectively.

4.6.27 Flashpoint of impregnant or potting compound (see 3.32). Unless certification is furnished, the flashpoint of the impregnant or potting compound shall be measured as specified in ASTM D 92.

4.6.28 Outgassing (applicable to nonhermetically sealed class S filters only) (see 3.4.2 and 6.7) . Materials used in the finished filter shall be tested in accordance with ASTM E 595. Samples to be tested shall have been processed in the same manner as that used in production of the qualification lot. Data listed in NASA Reference Publication 1124 revised may be used in lieu of the actual test data for applicable materials.

5. PACKAGING

* 5.1 Packaging. For acquisition purposes, the packaging requirements shall be as specified in the contract or order (see 6.2). When packaging of material is to be performed by DoD or in-house contractor personnel, these personnel need to contact the responsible packaging activity to ascertain packaging requirements. Packaging requirements are maintained by the Inventory Control Point's packaging activities within the Military Service or Defense Agency, or within the military service's system command. Packaging data retrieval is available from the managing Military Department's or Defense Agency's automated packaging files, CD-ROM products, or by contacting the responsible packaging activity.

6. NOTES

(This section contains information of a general or explanatory nature that may be helpful, but is not mandatory.)

* 6.1 Intended use. Filters described herein are intended for use in the reduction of broadband radio frequency interference. Filters covered by this specification are unique due to the necessity to operate satisfactorily in high reliability military systems under separate or a combination of demanding environmental conditions including high frequency vibration, high levels of shock, moisture and humidity, and temperature extremes.

* 6.2 Acquisition requirements. Acquisition documents must specify the following:

a. Title, number, and date of this specification, the applicable specification sheet and the complete PIN (see 3.1).

b. Issue of DODISS to be cited in the solicitation, and if required, the specific issue of individual documents referenced (see 2.1 and 2.2).

c. Packaging requirements (see 5.1).

d. Whether copies of x-ray films and photographs of destructive physical analysis (DPA) samples are required (class S filters only).

* 6.3 Qualification. With respect to products requiring qualification, awards will be made only for products which are, at the time of award of contract, qualified for inclusion in the Qualified Products List (QPL) whether or not such products have actually been so listed by that date. The attention of the contractors is called to these requirements, and manufacturers are urged to arrange to have the products that they propose to offer to the Federal Government tested for qualification in order that they may be eligible to be awarded contracts or purchase orders for the products covered by this specification. Information pertaining to qualification of products may be obtained from the Defense Supply Center Columbus (DSCC-VQP), P.O. Box 3990, Columbus, OH 43216-5000 or by email at vqp.chief@dla.mil.

6.4 Application data.

6.4.1 Configuration. Best attenuation in the stop-band can be achieved if an inductor faces a low impedance and if a capacitor faces a high impedance; however, since these are rarely perfectly suited to the application, it may be necessary to reverse this rule or to sacrifice attenuation in order to eliminate resonance. In cases where the impedance will vary considerably, filters with one or two additional stages may be used to ensure adequate attenuation under all possible conditions. The attenuation of filters manufactured with inductors and ceramic capacitors is affected by temperature, current, and voltage; so, these factors must be considered when the filter is designed into the system.

6.4.2 Case. Two types of cases are used for filters covered by this specification; hermetically sealed and nonhermetically sealed. The hermetically sealed filters are enclosed in metallic cases with glass seals, or equivalent, in order to meet the requirements of the seal test. Nonhermetically sealed filters are enclosed in metallic cases with potted end seals.

6.4.3 Soldering. When soldering ceramic capacitors and glass seals, heat shall be applied in such a way that it causes an even radial distribution over the surface. Methods such as preheat, slow heating, and limiting the maximum temperature shall be employed to minimize the occurrence of thermally induced cracks, crazing, chipping, or other physical damage. The same precautions used in heating shall be applied in cooling down the device. The solder joint where the internal wire exits through a glass seal and all other solder joints on solder-in style filters shall be made with solder in accordance with J-STD-006, or equivalent, having a liquid point not less than 280°C or as specified (see 3.1).

6.4.4 Solder coating. It is intended that solder coatings on terminals withstand extended storage without deterioration of soldering qualities or appreciable increase in resistance.

6.5 Finishes.

6.5.1 Tin-plated finish. Pure tin plating is prohibited (see 3.5.3.1) since it may result in tin whisker growth. Tin whisker growth could adversely affect the operation of electronic equipment systems. For additional information on this matter, refer to ASTM B545 (Standard Specification for Electrodeposited Coating of Tin). Based on past experience, tin plating in accordance with MIL-T-10727 or electro-tin fused (with a minimum tin content of 3 percent) has been used successfully to meet the requirements of this specification.

6.5.2 Tin-lead plated. Based on past experience, tin-lead plating in accordance with MIL-P-81728 or hot-solder dipped (40 percent to 60 percent tin in accordance with J-STD-006) has been used successfully to meet the requirements of this specification.

6.5.3 Silver-plated. Based on past experience, silver-plating in accordance with QQ-S-365 has been used successfully to meet the requirements of this specification.

6.5.4 Gold-plated. Based on past experience, gold plating in accordance with MIL-G-45204, (type II, grade C for broadband and high frequency bolt-style or type III, grade A for solder-in styles) has been used successfully to meet the requirements of this specification.

6.6 Installation methods (recommended).

6.6.1 Mounting the filter to the chassis. The device should be treated as heat and mechanically sensitive. Heat sink the filter when soldering on leads.

6.6.1.1 Threaded filters with flats. It is intended that these filters be mounted in a “D” hole using a washer, a nut and a torque wrench. Caution: Do not grip the filter body more than finger tight. If there is an undercut on the filter thread adjacent to the mounting surface, the bulkhead material must be thicker than the undercut. The recommended mounting torque is specified in the appropriate specification sheet.

6.6.1.2 Threaded filters with a hex body or a hex top seal. If flats are provided, these filters may be assembled as in 6.6.1.1. These filters may be mounted in a plain hole using a nut, a washer, a torque wrench, and a plain wrench. Preferably the plain wrench should be used to steady the filter while the torque wrench should be used to tighten the nut. If the hole in the chassis is threaded the filter should be mounted with a torque wrench.

6.6.1.3 Solder-in style.

6.6.1.3.1 Solder preform method. A fluxed solder preform of Sn 63 solder can be fitted into the subassembly. The subassembly and filter can then be preheated to +125°C for 5 minutes to reduce thermal shock of the ceramic material. To complete the soldering operation, heat may then be applied to the subassembly, in the immediate vicinity of the filter, with sufficient magnitude to reflow the solder preform. This may be accomplished with a controlled temperature source. Care should be taken to supply the heat via the subassembly, rather than heating the filter directly and only for the time required to make a good solder connection. Cool the assembly slowly by gradually returning it to room temperature.

6.6.1.3.2 Solder paste method. This second method is useful where there is a danger of damage to closely packed components or very heat sensitive parts. A bismuth solder alloy paste composed of 43 percent tin, 43 percent lead, and 14 percent bismuth melts at around +152°C and effective soldering can be achieved with it. This material, which is obtainable as a solder cream, can be applied by brush, or by hypodermic syringe and then heated in a static or tunnel oven for approximately a 40-minute period at +160°C to the joint. Cool the assembly slowly (see 6.6.1.3.1).

6.6.2 Soldering to the filter leads (all styles). All solder connections made to the terminals of the filter should be performed with solder that is liquid at temperatures less than +232°C, and soldering heat applied only long enough to make a good solder connection. Use a heat sink on the lead next to the filter body. Preheating the filters to +125°C for 5 minutes is recommended when possible to prevent thermal shock of the ceramic materials. Do not bend or twist the leads or terminals of the filters as this will result in cracked seals or ceramic capacitors.

6.7 Outgassing (option). As an option for inspection to outgassing requirements of 3.4.2, a minimum of 10 grams of each polymeric material in its final processed condition may be submitted to the following NASA installation for outgassing test: Director, Material and Processes Laboratory, EH01, Marshall Space Flight Center, Huntsville, AL 35812. As an alternative, a minimum of a single device utilizing each material may be submitted to Marshall Space Flight Center for outgassing tests in 4.6.28.

6.8 Subject term (key word) listing.

EMI
Feed-through, filter
Insertion loss
Low pass, filter
RFI

6.9 Specification sheets arranged by function. See tables XI, XII, and XIII.

* TABLE XI. Broadband types. 1/

Voltage ratings (volts)	Current ratings (amperes)	Circuit diagrams	Minimum capacitance (μF)	Specification sheet
70 V dc	.1 to 5.0	L1, L2, π	.7, 1.4	MIL-PRF-28861/4
100 V dc	.25 to 5.0	L1, L2, π	.45, .90	MIL-PRF-28861/2
150 V dc	.1 to 5.0	L1, L2, π	.25, .50	MIL-PRF-28861/3
200 V dc/125 V ac	.25 to 5.0	L1, L2, π	.15, .30	MIL-PRF-28861/5
50 V dc, 70 V dc,	15	L2, C	.001 to 1.2	MIL-PRF-28861/1
100 V dc, 150 V dc	15	L2, C	.001 to 1.2	MIL-PRF-28861/1
200 V dc/125 V ac	15	L2, C	.001 to 1.2	MIL-PRF-28861/1

1/ Hermetically sealed.

* TABLE XII. High frequency bolt types.

Thread series	Voltage rating (volts)	Current rating (amperes)	Circuit diagrams	Minimum capacitance	Specification sheet(s)
.112-40 UNC-2A	100 V dc and 200 V dc	5	L2, C	1000 pF to .045 μF	MIL-PRF-28861/6

* TABLE XIII. High frequency solder-in types.

Voltage rating (volts)	Current rating (amperes)	Circuit diagrams	Minimum capacitance	Specification sheet
50 V dc, 100 V dc and 200 V dc	5	L, C	10 pF to 15,000 pF	MIL-PRF-28861/12

* 6.10 Environmentally preferable material. Environmentally preferable materials should be used to the maximum extent possible to meet the requirements of this specification. Table XIV lists the Environmental Protection Agency (EPA) top seventeen hazardous materials targeted for major usage reduction. Use of these materials should be minimized or eliminated unless needed to meet the requirements specified herein (see section 3).

TABLE XIV. EPA top seventeen hazardous materials.

Benzene	Dichloromethane	Tetrachloroethylene
Cadmium and Compounds	Lead and Compounds	Toluene
Carbon Tetrachloride	Mercury and Compounds	1,1,1-Trichloroethane
Chloroform	Methyl Ethyl Ketone	Trichloroethylene
Chromium and Compounds	Methyl Isobutyl Ketone	Xylene
Cyanide and Compounds	Nickel and Compounds	

6.11 Changes from previous issue. The margins of this specification are marked with asterisks to indicate where changes from the previous issue were made. This was done as a convenience only and the Government assumes no liability whatsoever for any inaccuracies in these notations. Bidders and contractors are cautioned to evaluate the requirements of this document based on the entire content irrespective of the marginal notations and relationship to the last previous issue.

APPENDIX A

PROCEDURE FOR QUALIFICATION INSPECTION FOR CLASS B FILTERS

A.1 SCOPE

A.1.1 Scope. This appendix details the procedure for submission of samples, with related data, for qualification inspection of class B filters covered by this specification. The procedure for extending qualification is also outlined herein. This appendix is a mandatory part of the specification. The information contained herein is intended for compliance only.

A.2 APPLICABLE DOCUMENTS

This section is not applicable to this appendix.

A.3 SUBMISSION

A.3.1 Sample. A sample consisting of 45 specimens of each filter for which qualification is sought shall be submitted. Each sample shall be accompanied with the following information:

a. Attenuation curve in accordance with MIL-STD-220.

b. Certification as to the flashpoint of the impregnant or potting compound based on the Cleveland-cup process (see 4.6.27).

c. Schematic diagram of the filter, including nominal values of the components.

A.3.2 Certification of material. When submitting samples for qualification, the manufacturer shall submit certification, in duplicate, that the materials used in the filters are in accordance with the applicable specification requirements.

A.3.3 Description of items. The manufacturer shall submit a detailed description of the filters being submitted for tests, including the type and quantity of impregnant, material, thickness, and applied finish of case, and details of terminal.

A.4 EXTENT OF QUALIFICATION

A.4.1 Extent of qualification. Extent of qualification shall only be applicable for filters of the same style. Qualification for one filter may be the basis for qualification of another filter as indicated below:

a. Voltage rating: Extent of qualification shall be restricted to filters of the same voltage rating.

b. Current rating: Qualification of the lowest current rating and highest current rating for a given style will extend qualification for all intermediate current ratings.

c. Circuit configuration: As indicated in table A-I.

d. Capacitance: Capacitance range qualification for a given style and circuit configuration will be restricted to values equal to and less than the capacitance value submitted (for example, qualification of a 5,000 pF GMV filter will extend qualification to the 1000 pF GMV filter of the same style and circuit configuration).

e. Product assurance level: Qualification to class S filters will extend qualification to class B filters of the same voltage rating, current rating, capacitance, insertion loss, and physical configuration.

* TABLE A-I. Extent of qualification for circuit configurations.

Qualification of circuit configuration	Will qualify circuit configuration
C	C
L1	L1, L2, C
L2	L2, L1, C
Pi	Pi, L1, L2, C
T	T, L1, L2

As a requisite for extension of qualification, the product involved must be manufactured using the same facilities, processes, and materials as the product originally submitted for qualification.

A.4.1.1 Qualification to alternate case finish. To gain approval of an optional T case finish (e.g., electro-tin fused when originally qualified to hot-solder dipped) or an alternate case finish (e.g., silver, when originally qualified to gold), the following shall be required:

A sample of twenty filters (of the desired case finish) shall be submitted to the group I tests of qualification inspection. This sample shall then be divided and 10 filters each submitted to the group III and group IV tests with one failure allowed on the combined group III and group IV tests. This sample, from any specification sheet of a type as specified in table A-II, will extend approval (for the desired finish) to all other specification sheets of that type.

* TABLE A-II. Extent of qualification for case finish.

High frequency bolt types	Broadband types
MIL-PRF-28861/6	MIL-PRF-28861/1 MIL-PRF-28861/2 MIL-PRF-28861/3 MIL-PRF-28861/4 MIL-PRF-28861/5

* A.5 SOLDER DIP (RETINNING) LEADS

A.5.1 Solder dip (retinning) leads. The manufacturer (or authorized category B or C distributor), may solder dip/retin the leads of product supplied to this specification provided the solder dip/retin process has been approved by the qualifying activity.

A.5.2 Qualifying activity approval. Approval of the solder dip/retin process will be based on the following options:

a. When the original lead finish qualified was hot solder dip, lead finish 52 of MIL-STD-1276 (Note: The 200 microinches maximum thickness is not applicable). The manufacturer shall use the same solder dip process for retinning as is used in the original manufacture of the product.

b. When the lead originally qualified was not hot solder dip, lead finish 52 of MIL-STD-1276, as prescribed in 50.2a, approval for the solder dip/retin process shall be based on the following test procedure:

(1) Fifteen samples of any part number for each style and lead finish are subjected to the manufacturer's solder dip/retin process. Following the process, filters shall be subjected to the group A electrical tests (seal test shall also be performed on hermetically sealed filters). No failures shall be allowed.

(2) Five of the 15 samples shall then be subjected to the solderability test. No failures shall be allowed.

(3) The remaining 10 samples shall be subjected to the resistance to soldering heat test followed by the moisture resistance test (or seal test on hermetically sealed filters).

(Note: Solder dip/retin of gold plated leads is not allowed.)

A.5.3 Solder dip/retinning options. The manufacturer (or authorized category B or C distributor) may solder dip/retin as follows:

a. After the 100 percent group A screening tests. Following the solder dip/retinning process, the electrical measurements required in group A, subgroup 1, shall be repeated on 100 percent of the lot (seal test shall also be performed on hermetically sealed filters). (Note: The manufacturer may solder dip/retin prior to the 100 percent electrical measurements of the group A, subgroup 1 tests.) The percentage defective allowable (PDA) for the electrical measurements shall be as for the subgroup 1 tests.

b. As a corrective action, if the lot fails the group A solderability test.

c. After the group A inspection has been completed. Following the solder dip/retinning process, the electrical measurements required in group A, subgroup 1, shall be repeated on 100 percent of the lot (seal test shall also be performed on hermetically sealed filters). The PDA shall be as for the subgroup 1 tests. Following these tests, the manufacturer shall submit the lot to the group A solderability test.

APPENDIX B

GUIDELINES FOR DESTRUCTIVE PHYSICAL ANALYSIS (DPA) OF CLASS S FILTERS

B.1 SCOPE

B.1.1 Scope. This appendix provides a means of characterizing the internal structural features of filters using ceramic capacitors. The method to be used for cross sectioning and inspection are described. Applications of these methods will ensure uniform preparation and analysis. This appendix is a mandatory part of the specification. The information contained herein is intended for compliance only.

* B.2. APPLICABLE DOCUMENTS

ELECTRONIC INDUSTRIES ALLIANCE (EIA)

EIA-469 - Standard Test Method for Destructive Physical Analysis of High Reliability Ceramic Monolithic Capacitors. (DoD adopted)

(Application for copies should be addressed to the Electronics Industries Alliance, 2001 Eye Street, NW, Washington, DC 20006).

B.3. PROCEDURE

B.3.1 Sample selection. A sample or samples shall be randomly selected from those units that have not failed any previous tests.

B.3.2 X-ray review. Prior to sample preparation, review x-ray negatives for internal component location and anomalies that can be highlighted during cross sectioning.

B.3.3 Sample preparation.

B.3.3.1 Cleaning prior to mounting. Each DPA sample shall be cleaned prior to mounting. Each filter shall be swabbed with a cotton swab saturated with isopropyl alcohol. The filters shall then be allowed to air dry for 3 minutes prior to mounting.

B.3.3.2 Mounting. The filters shall be mounted such that they will be ground from the outside diameter toward the inside diameter resulting in a cross-sectioned plane parallel to the longitudinal axis.

B.3.3.3 Specimen grinding. Once the mounted filters have fully cured, they shall be ground and polished down to a depth that exposes the center of the terminals, (usually the filter center). This will be the final section plane. The filter, however, should be continuously inspected during grinding to observe any possible anomalies before reaching the final section plane. Specimen grinding shall conform to the procedures detailed in EIA-469 with the following exceptions:

a. 180-grit paper may be used to rough grind down through the filters outer case.

b. It is very important that once the inner diameter of the case is pierced the filter cross-section shall be inspected for voids, cavities, and possible unsupported elements. If any of these occur at this grinding stage or any time thereafter, the voids shall be filled with mounting material and allowed to properly cure before continuing. Cavity filling shall be accomplished by injection or preferably by vacuum back filling techniques. Care shall be taken so as to prevent stress cracking of the capacitor by using fine grit paper that is wetted during grinding.

c. The mounts shall be checked periodically during grinding to ensure no air pockets or unsupported elements have appeared.

d. The samples may be sectioned using a grinding method as described in EIA-469. This is only permissible after the internal cavities of the filter have been back-filled with the mounting compound.

B.3.3.4 Specimen polishing. Specimen polishing shall conform to the procedures detailed in EIA-469.

B.3.4 Visual inspection. All exposed surfaces of the filter shall be inspected for the following characteristics at a minimum magnification of 30 power. The lot is suspect if the DPA samples contain filters which exhibit the following anomalies:

a. Cracked ceramic: Cracks in the ceramic dielectric of the capacitor that encompasses two or more adjacent layers, or cracks that extend across plates to the outer surface.

b. Solder: Solder and center conductor connection between periphery of capacitor and case, loose retainer rings due to improper solder reflow, insufficient solder in feed-through terminals or capacitor eyelet that permits loose feed-through wire.

c. Alignment: Greater than 10 degrees misalignment of the capacitive element.

d. Cracked inductor core/inductor winding not protected from shorting to case.

e. Missing insulators.

f. The sum total of all major dimensions of loose metallic particles (solder balls) in a single isolated compartment shall not exceed 0.010 inch (0.25 mm).

g. Potting: Insufficient potting which allows any movement of any internal element or potting fill less than the minimum required (see 3.5.9).

h. Gross delaminations in accordance with EIA-469.

(Note: Damage caused by the DPA operations shall not be cause for lot rejection).

Custodians:
Army - CR
Navy - EC
Air Force – 11
NASA - NA
DLA - CC

Review activities:
Army - AR, AT, AV, MI
Navy - AS, MC, OS, SH
Air Force - 19, 99

Preparing activity:
DLA - CC

(Project 59GP-0184)

NOTE: The activities listed above were interested in this document as of the date of this document. Since organizations and responsibilities can change, you should verify the currency of the information above using the ASSIST online database at www.dodssp.daps.mil.