INCH-POUND

MIL-PRF-32140
14 January 2004

PERFORMANCE SPECIFICATION

RELAYS, ELECTROMAGNETIC, RADIO FREQUENCY, ESTABLISHED RELIABILITY, GENERAL SPECIFICATION FOR

This specification is approved for use by all Departments and Agencies of the Department of Defense.

1. SCOPE

1.1 Scope. This specification covers the general requirements for electromagnetic, RF hermetically sealed relays for use in electronic and communication-type equipment (see 6.1). These relays are designed to operate over the full range from low level to power switching with contact ratings up to 1 ampere direct current (dc). The failure rate level is established at a confidence level of 95 percent based on 1 million to 20 million cycles (see 1.3) at maximum ambient temperature (see 3.1).

CAUTION: The use of any coil voltage less than the rated coil voltage will compromise the operation of the relay.

CAUTION: Pick-up, hold, and dropout voltages are for test purposes only and are not to be used as design criteria. For additional application and caution information, see 6.1.

1.2 Part or Identifying Number (PIN). The PIN consists of the letter "M", the basic number of the specification sheet, an assigned dash number (see 3.1), and a suffix letter designating failure rate level or general purpose military applications designator (G) (see table I) as shown in the following example:

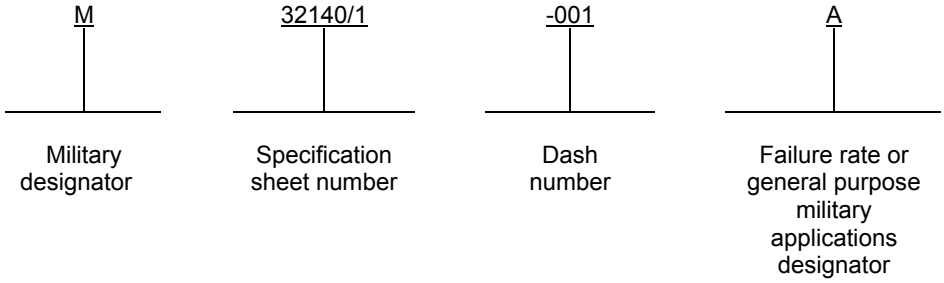

Comments, suggestions, or questions on this document should be addressed to Defense Supply Center, Columbus, Post Office Box 3990, Columbus, OH 43216-5000, or emailed to Relay@dscc.dla.mil. Since contact information can change, you may want to verify the currency of this address information using the ASSIST Online database at http://www.dodssp.daps.mil.

1.3 Failure Rate (FR) level designator. The failure rate designation is shown in table I (see 4.6)

TABLE I. Failure rate level designator.

Failure rate level designation	1% failure rate 95 percent confidence level Expected Life
A	1 million cycles
B	5 million cycles
C	20 million cycles
G	2/

1/ Failure rates are based on low level life tests.
2/ "G" level relays have no specified failure rate (see 4.7.2.3).

2. APPLICABLE DOCUMENTS

2.1 General. The documents listed in this section are specified in sections 3 or 4 of this specification. This section does not include documents cited in other sections of this specification or recommended for additional information or as examples. While every effort has been made to ensure the completeness of this list, document users are cautioned that they must meet all specified requirements of documents in section 3 or 4 of this specification, whether or not they are listed.

2.2 Government documents.

2.2.1 Specifications, standards, and handbooks. The following specifications, standards, and handbooks form a part of this document to the extent specified herein. Unless otherwise specified, the issues of these documents are those cited in the solicitation or contract.

DEPARTMENT OF DEFENSE SPECIFICATIONS

MIL-PRF-32140/1 - Relays, Electromagnetic, Radio Frequency, Signal, DC to 6 Gigahertz, Established Reliability, DPDT, Low Level to 1.0 Ampere, Hermetically Sealed.

DEPARTMENT OF DEFENSE STANDARDS

MIL-STD-202 - Electronic and Electrical Component Parts.
MIL-STD-690 - Failure Rate Sampling Plans and Procedures.
MIL-STD-750 - Semiconductor Devices.
MIL-STD-790 - Standard Practice for Established Reliability and High Reliability Qualified Products List (QPL) Systems for Electrical, Electronic, and Fiber Optic Parts Specifications.
MIL-STD-883 - Microcircuits.
MIL-STD-1276 - Leads for Electronic Component Parts.
MIL-STD-1285 - Marking of Electrical and Electronic Parts.

DEPARTMENT OF DEFENSE HANDBOOKS

MIL-HDBK-338 - Electronic Reliability Design.

(Copies of these documents are available online at http://assist.daps.dla.mil/quicksearch/ or http://www.dodssp.daps.mil or from the Standardization Document Order Desk, 700 Robbins Avenue, Building 4D, Philadelphia, PA 19111-5094.)

2.3 Non-Government publications. The following documents form a part of this document to the extent specified herein. Unless otherwise specified, the issues of these documents are those cited in the solicitation or contract.

AMERICAN SOCIETY FOR TESTING AND MATERIALS (ASTM)

ASTM B488 - Electrodeposited Coatings of Gold for Engineering Uses.

(Application for copies should be addressed to the ASTM International, P. O. Box C700, 100 Barr Harbor Drive, West Conshohocken, PA 19482-2959, http://www.astm.org/.)

ELECTRONIC INDUSTRIES ASSOCIATION (EIA)

EIA-557 - Statistical Process Control Systems.

(Application for copies should be addressed to Electronic Industries Association, 2500 Wilson Boulevard, Arlington, VA 22201-3834, http://www.eia.org/.)

INSTITUTE OF ELECTRICAL AND ELECTRONICS ENGINEERS (IEEE)

IEEE 315 - Graphic Symbols for Electrical and Electronics Diagrams.

(Application for copies should be addressed to the Institute of Electrical and Electronics Engineers (IEEE), IEEE Service Center, 445 Hoes Lane, P. O. Box 1331, Piscataway, NJ 08855-1331, http://www.ieee.org/).

2.4 Order of precedence. In the event of a conflict between the text of this document and the references cited herein (except for related specification sheets), the text of this document takes precedence. Nothing in this document, however, supersedes applicable laws and regulations unless a specific exemption has been obtained.

3. REQUIREMENTS

3.1 Specification sheets. The individual item requirements shall be as specified herein and in accordance with the applicable specification sheet. In the event of any conflict between the requirements of this specification and the specification sheet, the latter shall govern.

3.2 Qualification. Relays furnished under this specification shall be products that are manufactured by a manufacturer authorized by the qualifying activity for listing on the applicable Qualified Products List (QPL) before contract award (see 4.4 and 6.3). Authorized distributors which are approved to MIL-STD-790 distributor requirements by the QPL manufacturers are listed in the QPL.

3.3 QPL system. The manufacturer shall establish and maintain a QPL system for parts covered by this specification. Reliability of relays furnished under this specification shall be established and maintained in accordance with the requirements and procedures specified in MIL-STD-790 and this specification with details and exceptions specified in 4.2.1, 4.4.4, and 4.5.

3.3.1 Statistical process control (SPC). As part of the overall MIL-STD-790 QPL system, the manufacturer shall establish a SPC system that meets the requirements of EIA-557.

3.3.2 Electrostatic discharge (ESD) control program. As part of the overall MIL-STD-790 QPL system, the manufacturer shall establish and maintain an ESD control system. As a minimum, this program shall address the identification of ESD sensitive (ESDS) sub-components and end items, facilities, training, design protection, handling procedures, marking, cleaning, packaging, and verification.

3.4 Materials. Materials shall be as specified herein. However, when a definite material is not specified, a material shall be used which will enable the relays to meet the performance requirements of this specification. Materials used externally shall be fungus inert, self-extinguishing, and shall not support combustion, nor give off noxious gases in harmful quantities. Materials used internally shall not give off gases in quantities sufficient to cause explosion of sealed enclosures, cause contamination of the contacts or other parts of the relay that will adversely affect life or reliability, or form current-carrying tracks when subjected to any of the tests specified herein. Cotton-filled or wood-flour-filled materials shall not be used. Ceramic used for external surfaces shall be glazed. The use of silicone (see 6.10) or silicone compounds for any purpose is prohibited. Acceptance or approval of any constituent material shall not be construed as a guaranty of the acceptance of the finished product.

3.4.1 Metals. Metals shall be of a corrosion-resistant type or shall be plated or treated to resist corrosion. The use of mercury or mercury compounds is prohibited. The use of magnesium or magnesium alloys is prohibited (not applicable to contacts).

a. Use of tin plating is prohibited internally and externally (see 6.5.1). Use of tin-lead finishes are acceptable provided that the minimum lead content is 3 percent.

b. Use of zinc plating is prohibited internally and externally.

c. Use of cadmium plating is prohibited internally and externally.

3.4.1.2 Dissimilar metals. When dissimilar metals are used in intimate contact with each other, protection against electrolysis and corrosion shall be provided. The use of dissimilar metals in contact, which tends toward active electrolytic corrosion (particularly brass, copper, or steel used in contact with aluminum or aluminum alloy), is not acceptable. However, metal spraying or metal plating of dissimilar base metals to provide similar or suitable abutting surfaces is permitted. Dissimilar metals should be as defined in 6.5. In hermetic seals, the 0.25 volt difference between the header material and the housing material is not applicable.

3.4.2 Magnet wire. Magnet wire used shall enable the relay to meet the performance requirements of this specification.

3.4.3 Recycled, recovered, or environmentally preferable materials. Recycled, recovered, or environmentally preferable materials should be used to the maximum extent possible, provided that the material meets or exceeds the operational and maintenance requirements, and promotes economically advantageous life cycle costs.

3.5 Interface and construction requirements. Relays shall meet the interface and construction requirements as specified (e.g. weight, physical dimensions) (see 3.1).

3.5.1 Case. Unless otherwise specified (see 3.1), the case shall not be electrically connected to the contacts or coil; however, it may be used as part of the magnetic circuit.

3.5.1.1 Case grounding. When specified (see 3.1), means for connecting the relay case to ground shall be provided.

3.5.2 Sealing process. Relays shall be dried, degassed, and backfilled with an atmosphere and sealed such that the requirements of this specification are met.

3.5.3 Contacts. Contacts shall have load ratings and arrangements (see MIL-STD-1285) as specified (see 3.1) and unless otherwise specified (see 3.1), shall be capable of carrying the maximum rated current continuously as well as making and breaking the specified current under all environmental conditions specified herein.

3.5.4 Coils. Coils shall be adequately insulated electrically from the contacts and the case. The resistance and rated voltage (or current) shall be as specified (see 3.1). Unless otherwise specified (see 3.1), coils shall be designed for continuous operation at maximum rated voltage and temperature.

3.5.4.1 Terminal identification. When specified (see 3.1), a bead of contrasting color shall be used to designate the X1 (positive, if applicable) terminal (see figure 1 and MIL-STD-1285).

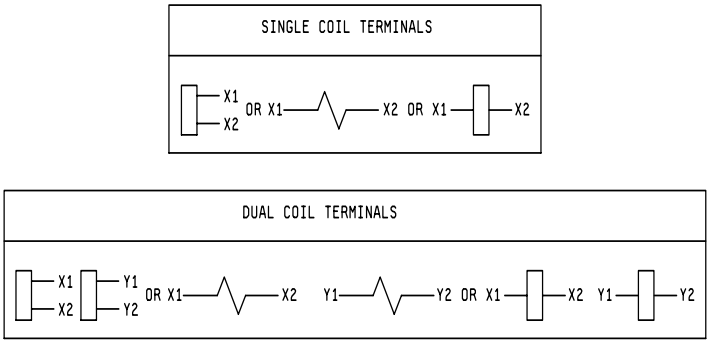

FIGURE 1. Symbols and marking for terminals.

3.5.4.2 Latching relays. Latching relays with two coils shall be so designed that if both coils are energized simultaneously, the contacts should not achieve a neutral position (both the normally closed and normally open contacts are open). The relay shall be screened as specified in 3.12.7 and 4.8.7.7. Specified dropout value (voltage or current) and release time are not applicable to latching relays (see 6.1).

3.5.5 Circuit diagram. The circuit diagram as specified (see 3.1), shall be a terminal view. Circuit symbols shall be in accordance with IEEE 315. For relays without an orientation tab, the circuit diagram, as specified (see 3.1), shall be oriented so that when the relay is held with the circuit diagram right side up as shown (see 3.1), and rotated away from the viewer about a horizontal axis through the diagram until the header terminals face the viewer, then each terminal shall be in the location shown in the circuit diagram.

3.5.6 Mounting means (see 3.1).

3.5.6.1 Bracket. Mounting brackets shall be an integral part of the relay, securely attached thereto in a manner to prevent any movement between the relay and the mounting bracket.

3.5.7 Terminals (see 3.1). Terminals shall be as specified herein. Manufacturer may supply hot solder dipped terminals provided that the hot solder dipping process has been approved by the qualifying activity and when specified on the individual purchase order (see 6.2.1a). Solder dipped terminals may be .002 inch (0.050 mm) larger than the maximum dimension specified (see 3.1).

3.5.7.1 Solder-lug terminals. Solder-lug terminals shall be designed to accommodate two conductors, each rated to carry the maximum rated current of the contact or coil terminated.

3.5.7.2 Wire leads. Wire leads shall be as specified (see 3.1). Optional, shortened wire leads may be supplied when specified on the individual purchase order (see 3.1 and 6.2.1b).

3.5.7.2.1 Wire leads, solder pin (SP). Solder pin wire leads shall be as specified (see 3.1).

3.5.7.3 Plug-in termination. Plug-in terminations shall conform to the arrangements or dimensions as specified (see 3.1). The mounting arrangement of the relay shall be so designed that the entire weight of the relay will be suspended and the stability of its mounting will be provided by an auxiliary mounting means other than the electrical terminals of a socket (see 3.1). Plug-in pin terminals shall provide the operational, environmental, and interface characteristics to provide a reliable interconnect to gold-plated contacts. One system for gold plating that may be used is ASTM B488, type 3, class 1.25, knoop hardness 130 to 240, with nickel underplate 50 to 150 microinches thick. The gold plating system shall enable the product to meet the performance requirements of this specification and shall be approved by the qualifying activity.

3.5.7.4 Solder dip (retinning) leads. The manufacturer may solder dip/retin the leads of product supplied to this specification provided the solder dip process has been approved by the qualifying activity.

3.5.7.4.1 Qualifying activity approval. Approval of the solder dip process shall be based on one of the following options (Note: Solder dip of gold-plated plug-in leads is not allowed.) All visual examination criteria shall be in accordance with method 208 of MIL-STD-202:

a. When the original lead finish qualified was hot solder dip lead finish 52 of MIL-STD-1276 (The 200-microinch thickness is not applicable). The manufacturer shall use the same solder dip process for retinning as is used in the original manufacture of the product.

b. When the lead originally qualified was not hot solder dip lead finish 52 as prescribed above, approval for the process to be used for solder dip shall be based on the following test procedure:

(1) Six samples for each style and lead finish are subjected to the manufacturer's solder dip process. Following the solder dip process, the relays shall be subjected to groups A2 and A4 inspections.

(2) Three of the six samples are then subjected to the solderability test (see 3.8). No visual defects are allowed.

(3) Remaining three samples are subjected to the resistance to soldering heat test (see 3.21).

(4) All six samples shall be subjected to groups A2 and A4 inspections. Minor scratching of the terminals due to insertion into test sockets shall not be cause for rejection.

3.5.7.4.2 Solder dip/retinning options. The manufacturer may solder dip/retin as follows:

a. After the 100 percent A1 screening test but before the A2 electrical tests.

b. As a corrective action, if the lot fails the A3 solderability test. Following the solder dip/retinning process of 4.7.2.2.2.2, as a minimum, insulation resistance (all terminals to case) shall be tested, and the A4 tests shall be performed, as applicable.

c. For relays that have been subjected to and passed group A inspections. Following the solder dip/retinning process, as a minimum, the insulation resistance (all terminals to case) shall be tested, and the solder coating coverage and workmanship shall be visually examined. Minor scratching of the terminals due to insertion into test sockets shall not be cause for rejection.

3.5.8 Diodes. Relays supplied with diodes installed internally are not considered electrostatic discharge (ESD) sensitive. However, the diode may be ESD sensitive when not part of the coil circuit or wired internal to the coil. Manufacturers may, at their option, test diodes used internally as specified in method 3015 of MIL-STD-883 modified to 16,000 volts to eliminate the need for the ESDS protection program described above.

Relays supplied with diodes installed internally are not considered electrostatic discharge (ESD) sensitive. However, the diode may be ESD sensitive when not part of the coil circuit or wired internal to the coil. In such case, the diode shall be processed in accordance with the requirements specified in 4.2.3. Manufacturers may, at their option, test diodes used internally as specified in method 3015 of MIL-STD-883 modified to 16,000 volts to eliminate the need for the ESDS protection program described above.

3.6 In-process inspection (see 4.7.1).

3.6.1 Diode in-process screening (applicable to relays with diodes; see 3.1 and 4.7.1.1). Perform in process screening as specified in 4.7.1.1. In-process inspection is not required when JANTX diodes or diodes screened to JANTX are used. Waiver of in-process screening requires qualifying activity approval.

3.7 Screening (see 4.8.2). The contact miss detector's monitoring level shall be less than 100 ohms for relays tested during cycling. Unless otherwise specified (see 3.1), any relay shall have a final insulation resistance measurement of 10,000 megohms or greater.

3.8 Solderability (see 4.8.3). The critical (examination) area of solid wire lead and pin terminals shall be at least 95 percent covered with a continuous new solder coating as specified in method 208 of MIL-STD-202. For solder-lug terminals greater than .045 inch (1.14 mm) in diameter, 95 percent of the total length of fillet, which is between the standard wrap wire and the terminal, shall be tangent to the surface of the terminal being tested, and shall be free of pinholes, voids, etc. A ragged or interrupted line at the point of tangency between the fillet and the terminal under test shall be considered a failure.

3.8.1 Solderability of case. Solderability of case is verified by grounding to meet RF performance characteristics (see 3.13 and 4.8.21). The perimeter of the case shall be at least 95 percent covered with a continuous new solder coating per method 208 of MIL-STD-202. A ragged or interrupted line at the point of tangency between the fillet and the case under test shall be considered a failure. Also, not meeting the RF test performance characteristics constitutes a failure.

3.9 Seal (see 4.8.4). There shall be no leakage in excess of 1×10^{-8} atmospheric cubic centimeters per second of air (atm cm^3/s).

3.10 Insulation resistance (see 4.8.5). Unless, otherwise specified (see 3.1), the insulation resistance shall be 10,000 megohms or more. After the high level life tests, the insulation resistance shall be 1,000 megohms or more.

3.11 Dielectric withstanding voltage (see 4.8.6). There shall be no leakage current in excess of 100 microamperes (μA). After high level tests, the dielectric withstanding voltage measured at atmospheric or reduced barometric pressure shall be at least 75 percent of the initial value (see 3.1).

3.12 Electrical characteristics (see 4.8.7). The following tests as specified in 3.12.1 through 3.12.7 shall comprise the electrical characteristics tests. Unless otherwise specified, electrical characteristics shall be 100 percent inspected and performed in the order as shown below.

3.12.1 Static contact resistance (see 4.8.7.1). Unless otherwise specified (see 3.1), the static contact resistance shall not exceed 0.05 ohm.

3.12.2 Specified pickup or latch/reset, hold, and dropout values (voltages) (see 4.8.7.2). The specified pickup or latch/reset, hold, and dropout values (voltages) shall be as specified (see 3.1).

3.12.3 Coil resistance or coil current (see 4.8.7.3).

3.12.3.1 Coil resistance (see 4.8.7.3.1). The coil resistance shall be as specified (see 3.1).

3.12.3.2 Coil current (see 4.8.7.3.2). The coil current shall be as specified (see 3.1) for relays with both coil transient suppression and polarity reversal protection diodes.

3.12.4 Operate and release time (see 4.8.7.4). The operate and release time shall be as specified (see 3.1). In multipole relays, during each of the operate and the release time measurements, the difference between the first moving contact to make and the last moving contact to make shall not exceed 1 millisecond (ms). This shall be exclusive of contact bounce. Release time is not applicable to latching relays.

3.12.4.1 Break before make (see 4.8.7.4.1). Moving contacts within a multipole relay shall show no evidence of any open contact closing before all closed contacts have opened (see 3.1). This applies to either state of the relay.

3.12.5 Contact dynamic characteristics (see 4.8.7.5).

3.12.5.1 Contact bounce (applicable to failure rate level "A") (see 4.8.7.5.1). Unless otherwise specified (see 3.1), the duration of the contact bounce shall not exceed 1.5 ms.

3.12.5.2 Contact stabilization time (applicable to failure rate levels "B" and “C”) (see 4.8.7.5.2). The time to reach and maintain a static contact resistance state shall not exceed 2.0 ms unless otherwise specified (see 3.1).

3.12.6 Coil transient suppression and diode block integrity test (see 4.8.7.6).

3.12.6.1 Coil transient suppression (applicable to dc operated relays with coil transient suppression diodes) (see 4.8.7.6.1). Coils of dc operated relays shall not generate a back EMF greater than that specified (see 3.1), as maximum induced transient voltage.

3.12.6.2 Diode block integrity test (applicable to dc operated relays with polarity reversal protection diodes) (see 4.8.7.6.2). The leakage current shall not exceed the value specified (see 3.1).

3.12.7 Neutral screen (applicable to latching relays only) (see 4.8.7.7). Latching relays shall be tested as specified in 4.8.7.7.

3.13 RF characteristics. (see 4.8.21). RF relays shall be capable of meeting the RF characteristics (3.13.1 through 3.13.4) as specified (see 3.1).

3.13.1 Insertion loss (dB) (see 4.8.21.3). The insertion loss between any RF path over the specified frequency range shall not exceed the value specified (see 3.1).

3.13.2 Voltage standing wave ratio (VSWR) (see 4.8.21.4). The VSWR for each RF path over the specified frequency range shall not exceed the value specified (see 3.1).

3.13.3 Isolation (dB) (see 4.8.21.5). The isolation between open contacts and between contact poles over the specified frequency range shall not be less than specified (see 3.1), in both the coil energized and de-energized conditions.

3.13.4 RF power handling capability, carry only (see 4.8.21.6). With rated power (see 3.1 and 6.8) passing through the relay, no evidence of breakdown or arcing shall be found. Following this test, insertion loss shall be no greater and isolation no less than the values specified (see 3.1).

3.14 Thermal shock (see 4.8.8). Insulation resistance, specified pickup or latch/reset, hold, and must dropout values (voltages), and operate and release time shall meet the requirements of 3.10, 3.12.2, and 3.12.4, respectively, at each temperature extreme. Following the temperature excursions, there shall be no cracking, peeling, or flaking of the finish; dielectric withstanding voltage shall meet 3.11 requirements.

3.15 Shock (specified pulse) (see 4.8.9). Unless otherwise specified (see 3.1), there shall be no opening of closed contacts in excess of 10 microseconds (μs) and there shall be no closure or bridging of open contacts in excess of 1 μs and no evidence of mechanical or electrical damage.

3.16 Vibration (see 4.8.10). Unless otherwise specified (see 3.1), there shall be no opening of closed contacts in excess of 10 μs and there shall be no closure or bridging of open contacts in excess of 1 μs and no evidence of mechanical or electrical damage.

3.17 Acceleration (unless otherwise specified, see 3.1) (see 4.8.11). The contacts of the relay shall remain in the de-energized position with no voltage across the coil and in the energized position when voltage is applied to the coil. Latching relays shall remain in each latched position with no voltage on the coil.

3.18 Terminal strength (see 4.8.12). There shall be no evidence of loosening or breaking of the terminals, nor shall there be any other damage which would adversely affect the normal operation of the relay. Bending of terminals shall not be construed as damage. The glass criteria of 3.28 does not apply here.

3.19 Magnetic interference (when specified, see 3.1) (see 4.8.13). The specified pickup or latch/reset, dropout, and hold values (voltages) shall meet the requirements specified in 3.12.2.

3.20 Coil life (see 4.8.14). There shall be no evidence of damage.

3.20.1 Coil endurance (see 4.8.14.1). The coil resistance shall be as specified (see 3.1).

3.21 Resistance to soldering heat (see 4.8.15). There shall be no damage which would adversely affect normal operation of the relay.

3.22 Overload (applicable to high level relays only) (see 4.8.17). The voltage drop across closed contacts shall be less than or equal to 5 percent of the applied load voltage and the voltage across open contacts shall be 95 percent or more of the applied load voltage. The case-to-ground fuse shall remain electrically continuous.

3.23 Salt spray or atmosphere (corrosion) (see 4.8.16). There shall be no evidence of breaking, cracking, chipping, or flaking of the finish, nor exposure of the base metal, due to corrosion, which would adversely affect the application or performance characteristics of the relay.

3.24 Life (see 4.8.18). Unless otherwise specified (see 3.1), for low level testing, the contact miss detector's monitoring level shall be less than or equal to 100 ohms. For high level testing, the contact miss detector's monitoring level shall be less than or equal to 5 percent of the applied load voltage and the voltage across open contacts shall be 95 percent or more of the applied load voltage. Unless otherwise specified, the static contact resistance following cycling shall be no greater than twice the initial specified contact resistance requirement. There shall be no mechanical or electrical failure. Welding of contacts, failure to make, carry or break the load, or failure of the fuse connected between case and load system ground or neutral shall constitute a failure. Relays indicating failure, not verified per a failure verification procedure approved by the qualifying activity, may be returned to test. During post life tests, failure of a diode shall constitute a failure.

3.25 Intermediate current (see 3.1 and 4.8.19). During cycling, unless otherwise specified (see 3.1), the resistance of a closed contact shall be less than or equal to 3 ohms and the voltage across an open contact shall be 95 percent or more of applied load voltage. After cycling, the static contact resistance shall be measured at room ambient (+25°C) and shall not exceed the limits as specified (see 3.1). Intermediate current shall not be considered a low level or high level contact load rating (see 6.1.1). There shall be no mechanical or electrical failure. Welding of contacts, failure to make, carry or break the load, or failure of the fuse connected between case and load system ground or neutral shall constitute a failure. Relays indicating failure, not verified in accordance with a failure verification procedure approved by the qualifying activity, may be returned to test. During post life tests, failure of a diode shall constitute a failure.

3.26 Resistance to solvents (see 4.8.20). The marking shall remain legible.

3.27 Marking.

3.27.1 JAN and J marking. The United States Government has adopted and is exercising legitimate control over the certification marks "JAN" and "J", respectively, to indicate that items so marked or identified are manufactured to, and meet all the requirements of specifications. Accordingly, items acquired to, and meeting all of the criteria specified herein and in applicable specifications shall bear the certification mark "JAN" except that items too small to bear the certification mark "JAN" shall bear the letter "J". The "JAN" or "J" shall be placed immediately before the part number except that if such location would place a hardship on the manufacturer in connection with such marking, the "JAN" or "J" may be located on the first line above or below the part number. Items furnished under contracts or orders which either permit or require deviation from the conditions or requirements specified herein or in applicable specifications shall not bear "JAN" or "J". In the event an item fails to meet the requirements of this specification and the applicable specification sheets, the manufacturer shall remove completely the military part number and the "JAN" or the "J" from the sample tested and also from all items represented by the sample. The "JAN" or "J" certification mark shall not be used on products acquired to contractor drawings or specifications. The United States Government has obtained Certificate of Registration Number 504,860 for the certification mark "JAN" and Registration Number 1,586,261 for the certification mark "J"."

3.27.2 Identification marking (full). Relays shall be marked in accordance with method I of MIL-STD-1285 and shall include the following information:

a. Military PIN (see 1.2 and 3.1). The "JAN" or "J" shall not be marked in front of the PIN.

b. "JAN" or "J" brand. The "JAN" or "J" shall appear directly above or below the "M" of the military PIN (examples: JAN M32140/X-XXXL)
M32140/X-XXXL or J

c. Date code (at the option of the manufacturer, the "J" with the date code may be used instead of b). The date code shall provide traceability (see 4.2.2).

d. Source code.

e. Lot symbol (optional).

f. Rated coil voltage (or current) (see 3.1) and when applicable, operating frequency.

g. Coil resistance.

h. Circuit diagram (see 3.5.5).

j. Contact rating.

3.27.3 Minimum marking (when specified, see 3.1). When space does not permit the marking specified in 3.27.2, the marking shall include, as a minimum the military PIN; the "J" with the date code (example J0330); circuit diagram; and manufacturer's name or source code.

3.27.4 Failure rate level substitution. With acquiring activity approval, relays qualified to lower (better) failure rates, may be substituted for higher failure rate parts. For example, a relay qualified to failure rate level "B" (5 million cycles), may be substituted for a failure rate "A" (1 million cycles), relay. Relays shall not be remarked unless specified in the contract or purchase order.

3.27.5 Interchangeability. All parts having the same military PIN shall be directly and completely interchangeable with each other with respect to installation and performance to the extent specified in the military specification sheet (see 3.1).

3.28 Header glass. Header glass may have small irregularities, such as bubbles, chips, and cracks. The acceptability shall be based on figure 2 and the following:

a. Surface blisters whose diameters do not exceed one-half of the radial distance between the terminal and the corresponding header metal (for a cluster of blisters, the overall cluster diameter shall apply) are acceptable.

b. Circumferential cracks which originate and terminate in the glass and which extend less than 135° are acceptable (see figure 2, reference B).

c. Radial cracks with lengths not exceeding three-quarters of the distance between the terminal and the surrounding header metal are acceptable (see figure 2, reference C).

d. Tangential cracks which are confined to a single zone are acceptable (see figure 2, reference D).

e. Meniscus cracks, and chipouts, which completely surround the terminal are acceptable if:

(1) The meniscus cracks, and chipouts do not extend beyond one-half the distance from the terminal to the surrounding header metal, or

(2) The meniscus cracks, and chipouts do not extend beyond one-quarter of the distance from the terminal to the surrounding header metal and a portion of the meniscus cracks, and chipouts does not extend beyond three-quarters of the distance from the terminal to the surrounding header metal if that portion of the meniscus cracks, and chipouts does not span more the 180° (see figure 2, reference E).

f. An internal bubble whose diameter does not exceed one-third the distance between the terminal and the surrounding header metal is acceptable.

Microscopic examination with up to 10X magnification shall be used. In case of dispute, all relays shall meet the applicable insulation resistance, dielectric withstanding voltage, and seal requirements, regardless of the acceptability of the header glass.

The above requirements are not applicable after group B and group C inspections and also not applicable to relays with spacer pads after forming the leads.

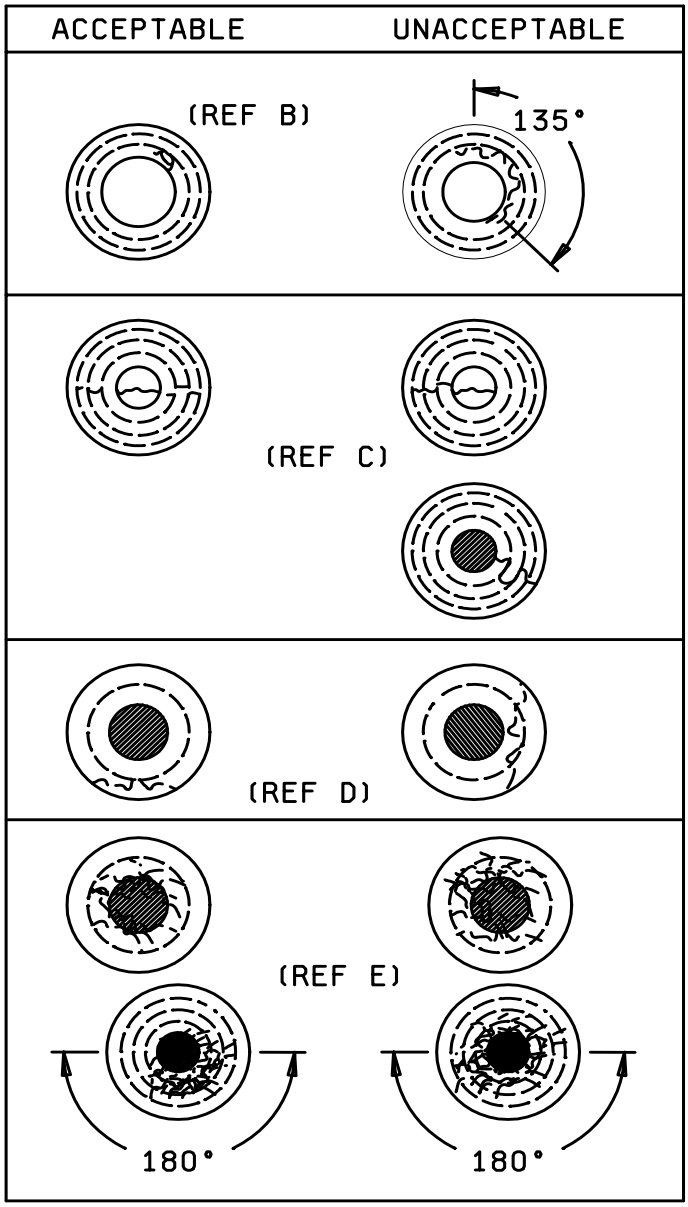

NOTE: The broken lines indicate the division of the radial distance between the terminal and the surrounding header metal into equal parts, thus creating concentric zones around the terminal.

FIGURE 2. Inspection aid.

3.29 Workmanship. The relays shall be fabricated in such a manner as to be uniform in quality, and shall be free from cracked or displaced parts, sharp edges, burrs, and other defects that will affect life, serviceability, and appearance.

4. VERIFICATION

4.1 Classification of inspection. The inspections specified herein are classified as follows:

a. Qualification inspection (see 4.4)

b. Verification of qualification (see 4.5)

c. In-process, conformance inspection, and periodic inspection (see 4.7)

4.2 QPL system. The manufacturer shall establish and maintain a QPL system as described in 3.3. Evidence of such compliance shall be verified by the qualifying activity of this specification as a prerequisite for qualification and retention of qualification.

4.2.1 Statistical process control (SPC). The manufacturer shall provide evidence of an established SPC program as described in 3.3.1. Evidence of such compliance shall be verified by the qualifying activity as a prerequisite for qualification and retention of qualification.

4.2.2 Traceability requirements. The manufacturer shall submit to the qualifying activity the procedure whereby the lot date codes are assigned that incorporates traceability. The following is a list of raw material/component parts and subassembly traceability requirements:

a. Header-contact subassembly with the lot number.

(1) Stationary or moving contact (a contact may consist of an individual wire or a contact blade and contact button).

(2) Header with glass to metal sealed leads in place with the lot number.

(3) Return spring(s).

(4) Diodes (when applicable) with the lot number.

(5) Magnets (when applicable).

b. Motor subassembly with the lot number.

(1) Wound coils with the lot number.

(2) Armature assembly (including actuators as applicable).

(3) Diodes (when applicable) with the lot number.

(4) Magnets (when applicable).

4.2.3 ESDS protection program. This requirement is applicable to all manufacturers who handle ESDS component parts and materials in the relay manufacturing or testing process. Evidence of such compliance shall be verified by the qualifying activity of this specification as a prerequisite for qualification and continued qualification. This program shall be documented by an ESD control plan which must be under document control. As a minimum, this plan must address the identification of ESDS sub-components and end items, facilities, training, design protection, handling procedures, marking, cleaning, preservation, packaging, and quality assurance. A model ESD control program is available from the qualifying activity and may be used as a guideline document. Further guidance for ESD control is available from the EOS/ESD Association and the EIA.

4.3 Inspection conditions. Unless otherwise specified herein, the test conditions specified in the "GENERAL REQUIREMENTS" of MIL-STD-202 shall be considered for referee purposes only. All inspections may be performed at ambient conditions consistent with industry practice.

4.3.1 Power supply. Unless otherwise specified herein, the power supply shall have no more than 10 percent regulation at 110 percent of the specified test load current. A dc power supply shall have no more than 5 percent ripple voltage. An ac power supply shall be within 1 percent of the specified frequency and shall be sinusoidal with a form factor between 0.95 and 1.25.

4.3.2 Grounding. Unless otherwise specified (see 3.1), the negative side of the dc power supply shall be grounded. One side of single-phase ac power supply shall be grounded.

4.3.3 Load conditions during tests. The coil(s) of the relay under test shall have one side connected to the ground of a power supply ground separate from the load power supply. Each stationary contact shall be connected to an individual load, or as an option, to the loads of the relay. The moveable contacts shall be connected to the power source, except for double break contacts. All tests during which the contacts are loaded and being cycled, except dielectric withstanding voltage, shall be conducted with the case of the relay connected to the power supply ground or neutral through a normal blow fuse rated at 5 percent of the contact load maximum, but not less than 100 mA. For relays with nongrounded case ratings, tests for isolated case ratings may be made with the case electrically isolated from the power supply ground. NOTE: 4.3.3 does not apply to RF characteristics testing.

4.3.4 Testing devices. Unless otherwise specified herein, devices used in the testing of relays shall not load the contacts above 10 mA resistive at 6 V dc or peak ac maximum open circuit voltage.

4.3.5 Mounting relays for ambient temperature tests. When the relays are subjected to the tests specified in 4.8.14 (coil life), they may be mounted on a heat sink in accordance with the following:

a. Each relay may be attached by its normal mounting means to a .062 inch (1.57 mm) thick minimum, flat aluminum plate heat sink. The heat sink shall be designed to place every relay in the center of its own square space whose total surface area (both sides) is eight times the outside surface area of the relay, excluding mounting. Relays without mounts shall be held to the heat sink with a metal strap .25 inch (6.35 mm) wide by .015 inch (0.38 mm) maximum thickness. The heat sink assembly shall be suspended by twine or other nonheat-conducting material. The leads shall not constitute a heat sink.

b. Chamber temperature shall be controlled to maintain the temperature at the specified ambient extremes (see 3.1).

4.3.6 Methods of examination and test. Application of coil power to relays under test shall be such that plus polarity is applied to the color coded terminal when applicable; or to the lower numbered terminal when color coding is not used. Testing of latching relays shall be repeated with each coil serving as the operating coil; and testing of latching relays shall be repeated with the relay in each operated position.

4.3.7 Reliability requirements. The confidence levels for qualification and maintenance of qualification are 95 percent.

4.3.8 Tolerances. Unless otherwise specified (see 3.1), all electrical, environmental, and mechanical parameters shall have a tolerance of ±10 percent.

4.3.9 Alternate test equipment. Test circuits and test equipment herein are intended to provide guidance to the relay manufacturer. Use of any alternate test circuits or test equipment shall be approved by the qualifying activity prior to use.

4.4 Qualification inspection. Qualification inspection shall be performed at a laboratory acceptable to the Government (see 6.3) on sample units produced with equipment and procedures normally used in production.

4.4.1 Qualification. Qualification shall be granted at the 95 percent confidence level and shall be based on results of the qualification inspection specified in table II. A certification of construction to the materials requirement of 3.4 and the design and construction requirements of 3.5 shall accompany the submission of qualification inspection results to the qualifying activity. Qualification of parts with the “G” designator is predicated upon qualification of the “A”, “B”, or “C” designator PINs. Upon request of the manufacturer, qualification to the “G” designator PINs will be granted for the envelop of products successfully qualified to the “A”, “B: or “C” designator PINs. The products involved must be of the same design, manufactured using the same facilities, processes, and materials as the product originally submitted for and qualified under the “A”, “B”, or “C”, designators. NOTE: Failure rate level testing is not conducted for “G” PINs.

4.4.1.1 Sampling plan. The number of relays to be subjected to qualification inspection shall be as specified in table II. The sample shall be selected from a production run and shall be produced with equipment or procedures normally used in production. The qualification sample shall be as defined in table II.

4.4.2 Inspection routine. Sample units shall be subjected to the qualification inspection outlined in table II, in the order shown, except that groups Q2 through Q5 may be conducted concurrently. All sample units shall be subjected to the tests in Q1. These sample units shall then be divided into four groups as specified in table II and subjected to the inspection specified for their particular group.

4.4.3 Failures. Failures in excess of those allowed in table II shall be cause for refusal to grant qualification approval.

TABLE II. Qualification inspection.

Inspection	Requirement paragraph	Test method paragraph	Number of sample units to be inspected	Number of failures allowed
Q1				
Visual and mechanical inspection (internal) 2/	3.1 and 3.27	4.8.1		
Screening	3.7	4.8.2		
Solderability (3 sample units) 3/	3.8	4.8.3		
Dielectric withstanding voltage 4/	3.11	4.8.6	All sample units 1/	0
Insulation resistance 4/	3.10	4.8.5		
Electrical characteristics 4/ 5/	3.12	4.8.7		
Visual and mechanical inspection (external) (dimensional check on 2 sample units only)	3.1, 3.27	4.8.1		
Seal	3.9	4.8.4		
Q2				
Thermal shock	3.14	4.8.8		
Resistance to solvents	3.26	4.8.20		
Shock (specified pulse)	3.15	4.8.9		
Vibration (sinusoidal)	3.16	4.8.10.1	4	1
Vibration (random)	3.16	4.8.10.2		
Acceleration	3.17	4.8.11		
Terminal strength	3.18	4.8.12		
Dielectric withstanding voltage 4/	3.11	4.8.6		
Insulation resistance 4/	3.10	4.8.5		
Electrical characteristics 4/ 5/	3.12	4.8.7		
Seal	3.9	4.8.4		

See footnotes at end of table.

TABLE II. Qualification inspection - Continued.

Inspection	Requirement paragraph	Test method paragraph	Number of sample units to be inspected	Number of failures allowed
Q3				
Magnetic interference (when specified)	3.19	4.8.13		
Coil life	3.20	4.8.14		
Resistance to soldering heat	3.21	4.8.15		
Salt atmosphere (corrosion)	3.23	4.8.16		
Dielectric withstanding voltage 4/	3.11	4.8.6	4	1
Insulation resistance 4/	3.10	4.8.5		
Electrical characteristics 4/ 5/	3.12	4.8.7		
Seal	3.9	4.8.4		
Q4				
Overload (highest dc resistive load)	3.22	4.8.17		
Dielectric withstanding voltage 4/	3.11	4.8.6		
Insulation resistance 4/	3.10	4.8.5	4	1
Electrical characteristics 4/ 5/	3.12	4.8.7		
Visual inspection (external)	3.1, 3.27	4.8.1		
Q5				
Life	3.24	4.8.18		
Dielectric withstanding voltage 4/	3.11	4.8.6		
Insulation resistance 4/	3.10	4.8.5	20	See appendix A
Electrical characteristics 4/ 5/	3.12	4.8.7		
RF Characteristics	3.13	4.8.21		
Q6				
Intermediate current	3.25	4.8.19		
Dielectric withstanding voltage 4/	3.11	4.8.6	4	1
Insulation resistance 4/	3.10	4.8.5		
Electrical characteristics 4/ 5/	3.12	4.8.7		

1/ Manufacturers should select a sufficiently large enough sample size to insure the relays required for the sample size specified in Q5 are available upon completion of all manufacturing processes prior to beginning of the testing specified in Q1 through Q4.
2/ One sample unit remaining unsealed shall be subjected to the internal inspection.
3/ Solderability samples are not subjected to dielectric withstanding voltage, insulation resistance, electrical characteristics, and seal.
4/ Coil resistance or coil current may be done prior to dielectric withstanding voltage and insulation resistance. Testing sequence is optional for insulation resistance and dielectric withstanding voltage prior to electrical characteristics.
5/ Measurement of coil current is applicable only to relays with both coil transient suppression and polarity protection diodes.

4.4.4 Confidence level and quality level verification.

4.4.4.1 Confidence level qualification. Confidence level qualification shall be in accordance with appendix A of this specification.

4.5 Verification of qualification. The manufacturer shall compile a summary of the results of conformance inspections and (where applicable) extended test data, in the form of a verification of qualification report, and forward it to the qualifying activity as the basis of continued qualification approval at 6-month intervals. In addition to the periodic submission of test data, the manufacturer shall immediately notify the qualifying activity whenever the data indicates that the manufacturer has failed to maintain his qualified confidence level. Continuation shall be based on evidence that, over the 6-month period, the following has been met:

a. Verification by the qualifying activity that the manufacturer meets the requirement of MIL-STD-790.

b. The manufacturer has not modified the design of the item.

c. The specification requirements for the item have not been amended so as to affect the character of the item.

d. Lot rejection for group A inspection does not exceed 10 percent or one lot, whichever is greater.

e. Requirements for groups B and C are met (where applicable).

f. The records of all tests combined substantiate that the 95 percent confidence level has been maintained.

g. Continued qualification to the “A”, “B”, or “C” PIN designator.

If group C test requirements were not met and the manufacturer has taken corrective action satisfactory to the Government, the forwarding of the verification of qualification report may be delayed until within 60 days after completion of retesting of the group C inspections. In this case, the qualifying activity shall be notified of this condition within the time the original verification of qualification report was due. In the event that no production occurred during a 6-month reporting period, the manufacturer shall provide verification to the qualifying activity certifying that the manufacturer still has the capabilities and facilities necessary to produce the relay. If during two consecutive reporting periods there has been no production, the manufacturer may be required, at the discretion of the qualifying activity, to produce test samples to perform all group B and C tests.

4.6 Confidence level determination. Determination of levels shall be based upon data from all completed life tests. Information for the determination of levels shall be consist of the following:

a. The qualification test samples.

b. Test on every production lot which has been submitted for group B quality conformance inspection.

c. Test results of relays which have a similar internal design and construction, same production processes, same or higher environmental capability, and same electrical characteristics as the qualified relay and which have been tested in accordance with the group B quality conformance inspection conditions. These relay types must be reviewed and approved by the qualifying activity prior to being considered as acceptable relays for use in obtaining data.

4.6.1 Records. Test records shall be maintained which shall include the data derived from the sources specified in 4.6. The example forms shown in MIL-STD-690 include the minimum information required and a suggested format for this report. Test data on every production lot that has been submitted for conformance inspection shall be included.

4.6.2 Confidence level computation. Data from this testing shall be used to calculate the ongoing confidence level of meeting the required number of cycles in accordance with appendix A. For this computation a failure is considered to be the point at which a relay first indicates a miss under testing.

4.6.3 Exemption of data. Exemptions of data requirement in MIL-STD-690 shall apply.

4.6.4 Qualification approval for higher FR. Qualification approval granted for one of the lower FR levels will include qualification for all of the higher FR levels; for example, qualification approval for level "C" will include qualification approval for levels "A" and "B"

4.7 In-process inspection, conformance inspection, and periodic inspection.

4.7.1 In-process inspection (see 3.6).

4.7.1.1 Diode in-process screening (see 3.6.1). Each manufacturer shall establish a diode screening process as approved by the qualifying activity. As a minimum, this process shall include a 24-hour minimum burn-in at +125°C minimum and may use MIL-STD-750 as a guide. This process shall be performed prior to run-in (see 4.8.2.1).

4.7.2 Conformance inspection. Inspection of product for delivery shall consist of group A inspection for product number designators “A”, “B”, “C”. For parts with designator “G”, see 4.7.2.3.

4.7.2.1 Inspection and production lot.

4.7.2.1.1 Inspection lot. An inspection lot shall consist of all the relays of the same specification sheet, and those of similar design and construction as outlined in 6.3.1, manufactured under essentially the same process and conditions during a manufacturing period of 1 month maximum. The manufacturer shall define and document the period for an inspection lot. For purposes of lot formation, all terminal types may be included in the same lot; however, all lead types which are combined shall have the same method of terminal attachment. All leads in the lot shall be represented in a similar proportion by samples selected for inspection.

4.7.2.1.2 Production lot. A production lot shall consist of all relays of the same PIN. Manufacture of all parts in the lot shall have been started, processed, assembled, and tested as a group. Lot identity shall be maintained throughout the manufacturing cycle.

4.7.2.2 Group A inspection. Group A inspection shall consist of the inspections specified in table III.

4.7.2.2.1 A1, A2, and A4 tests. The A1, A2, and A4 tests shall be performed on a production lot basis on 100 percent of the product supplied under this specification (see footnotes to table III). Relays that do not meet specification requirements of these groups shall be removed from the lot.

4.7.2.2.1.1 Sampling plan. Except as noted, the tests in A1, A2, and A4 shall be performed on each relay offered for inspection. When possible, these tests shall be witnessed by the government inspector at the time they are performed by the manufacturer.

4.7.2.2.1.2 Rejected lots. Relays that do not meet the requirements of the tests in A1, A2, and A4 shall be rejected and shall be removed from the lot. If more than 5 percent of the relays are discarded during A2 testing, the production lot shall be rejected and not offered for reinspection.

4.7.2.2.2 A3 tests.

4.7.2.2.2.1 Sampling plan. Two samples shall be selected randomly from each inspection lot and subjected to the A3 solderability and RF tests. If there are one or more defects, the lot shall be considered to have failed.

4.7.2.2.2.2 Rejected lots. In the event of one or more defects, the inspection lot is rejected. The manufacturer may use one of the following options to rework the lot:

4.7.2.2.2.2.1 Solderability

a. Each production lot that was used to form the failed inspection lot shall be individually submitted to the solderability test as required in 4.8.3. Production lots that pass the solderability test are acceptable for shipment. Production lots failing the solderability test can be reworked as described in 4.7.2.2.2.2.1b and 4.7.2.2.2.2.1c.

b. The manufacturer submits the failed lot to a 100 percent solder dip using an approved solder dip process in accordance with 3.5.7.4. Two additional samples shall be selected and subjected to the solderability test with zero defects allowed. If the lot fails this solderability test, the lot shall be rejected and shall not be furnished against the requirements of this specification.

c. The manufacturer may submit the failed lot to a strip and replate process followed by a complete group A inspection. The reworked lot shall be considered a new lot for the purpose of the 5 percent requirement of A2. If the lot fails this solderability test, the lot shall be rejected and shall not be furnished against the requirements of this specification.

4.7.2.2.2.2.2 RF characteristics. A DPA shall be performed to determine if the failure mode is lot-related. If determined to be an anomaly, a second sample of 2 relays may be pulled and tested with zero defects allowed. If the lot fails any RF test, the lot shall be rejected and shall not be furnished against the requirements of this specification.

TABLE III. Group A inspection.

Inspection	Requirement paragraph	Test method paragraph	Inspection requirements
A1 1/			
Vibration (sinusoidal) 2/	3.16	4.8.10.1	100 percent
Screening, run-in	3.7	4.8.2	
A2			
Dielectric withstanding voltage 3/	3.11	4.8.6	100 percent
Insulation resistance 3/	3.10	4.8.5	
Electrical characteristics 3/ 4/	3.12	4.8.7	
A3			
Solderability 7/	3.8	4.8.3	2 samples
RF Characteristics	3.8.1, 3.13	4.8.21	
A4			
Visual and mechanical inspection (external) 5/ 6/	3.1, 3.27	4.8.1	100 percent
Seal	3.9	4.8.4	

1/ Tests shall be performed in the order shown.
2/ For FR level A relays, the vibration (sinusoidal) test shall be performed on 13 relays per lot with no failures allowed. In the event of a failure, the lot shall be 100 percent inspected. For lots with fewer than 13 relays, the lot shall be 100 percent inspected.
3/ Coil resistance or coil current may be done prior to dielectric withstanding voltage and insulation resistance. Testing sequence optional, except that dielectric withstanding voltage shall precede insulation resistance.
4/ Measurement of coil current is applicable only to relays with both coil transient suppression and polarity reversal protection diodes.
5/ Minor defects, such as marking, may be reworked. A two piece sample of each lot shall be mechanically inspected and visually inspected for cracked glass. If cracks exceeding the allowable limits are found, the entire lot shall be inspected to the criteria of 3.28.
6/ It is intended that a two piece sample of each relay style be inspected in accordance with 6.3.1, except as limited by the housing style, external attachments, etc..
7/ Solderability of case tested during board mounting for RF characteristics.

4.7.2.3 Parts with designator "G". The manufacturer shall establish and maintain an inspection system to verify the relay meets the electrical, visual, mechanical, and solderability requirements. In-line or process control may be part of such system. The inspection system shall include criteria for lot rejection and corrective actions. The inspection system shall be verified under the overall QPL system (see 3.3). NOTE: Since the "G" designator parts are the same design as the "A", "B", or "C" designator parts, without the mandatory conformance inspection, this product is still expected to meet the environmental qualification type requirements such as moisture resistance, shock, and vibration.

4.7.3 Periodic inspections. Periodic inspections shall consist of groups B and C. Except where the results of these inspections show noncompliance with the applicable requirements (see 4.7.3.3), delivery of products which have passed group A shall not be delayed pending the results of these periodic inspections.

4.7.3.1 Group B inspection. Group B inspection shall consist of the tests in the order specified in table IV and shall be made on sample units from inspection lots which have passed the group A inspection.

4.7.3.1.1 Sampling plan. The test sample size shall be determined by the manufacturer so that the relay cycles generated meet the maintenance of qualification requirements specified for the qualified confidence level (see 4.4.4). A minimum quantity of samples shall be selected from each inspection lot as determined by the quantity needed to maintain the confidence level. In all cases, the sampling plan shall be approved by the qualifying activity. As far as is practicable, the relays tested during a maintenance period shall be representative of all relays produced during this period.

4.7.3.1.2 Disposition of sample units. Sample units which have been subjected to group B inspection shall not be delivered on the contract or purchase order.

TABLE IV. Group B inspection.

Inspection	Requirement paragraph	Test method paragraph
Life 1/	3.24	4.8.18
Dielectric withstanding voltage 2/	3.11	4.8.6
Insulation resistance 2/	3.10	4.8.5
Electrical characteristics 2/	3.12	4.8.7
RF Characteristics	3.13	4.8.21
Visual inspection (external)	3.1, 3.27	4.8.1

1/ Sample units shall be tested in a predetermined sequence as defined by the manufacturer and approved by the qualifying activity. All loads specified in the applicable specification sheet shall be represented. All loads need not be represented in a 6-month maintenance period but shall be represented within two 6-month maintenance periods.
2/ Testing sequence optional, except that dielectric withstanding voltage shall precede insulation resistance.

4.7.3.2 Group C inspection. Group C inspection shall consist of the tests in the order specified in table V. Group C inspection shall be made on sample units selected from inspection lots which have passed the group A inspection.

4.7.3.2.1 Sampling plan. Two samples for C2 every 6 months, two samples for C3 every 6 months, two samples for C4 every 12 months, and two samples for C5 every 36 months.

4.7.3.2.1.1 Similarity. For purposes of complying with group C requalification, relays, of similar construction and processing may be combined (see 6.3.1.1 and 6.3.1.2).

4.7.3.2.2 Failures. No failures shall be permitted except for intermediate current in C1 1/.

4.7.3.2.3 Disposition of sample units. Sample units which have been subjected to group C inspection shall not be delivered on the contract or purchase order.

4.7.3.3 Noncompliance. During group B and C inspections, when a failure exceeds the allowable number of failures or testing does not support the stated confidence level, the manufacturer shall notify the qualifying activity and the cognizant inspection activity of such failure within 5 working days. The manufacturer shall prepare to take corrective action on the materials or processes, or both, as warranted, and on all units of product which can be corrected and which were manufactured under essentially the same materials and processes, and which are considered subject to the same failure. Acceptance and shipment of the product shall be discontinued until corrective action, acceptable to the qualifying activity has been taken. After the corrective action has been taken, group B and C inspections shall be repeated on additional sample units (all tests, or the tests which the original sample failed, at the option of the qualifying activity). Group A inspection may be reinstituted; however, final acceptance and shipment shall be withheld until the group B or C inspection has shown that the corrective action was successful. In the event of failure after reinspection, information concerning the failure shall be furnished to the qualifying activity and the cognizant inspection activity within 5 working days.

4.8 Methods of inspection.

4.8.1 Visual and mechanical. Relays shall be examined to verify that the materials, external design and construction, physical dimensions, marking, and workmanship are in accordance with the applicable requirements (see 3.1, 3.4, 3.5, 3.27, and 3.29). Inspection requirements of 3.28 apply only when indicated.

1/ One intermediate current failure per 6-month retention period shall be permitted per FR groupings of similar relay types as approved by the qualifying activity.

TABLE V. Group C inspection.

Inspection	Requirement paragraph	Test method paragraph	Number of sample units for inspection
C1 (every month) 1/			
Intermediate current	3.25	4.8.19	
Dielectric withstanding voltage 2/	3.11	4.8.6	3
Insulation resistance 2/	3.10	4.8.5	
Electrical characteristics 2/ 3/	3.12	4.8.7	
Visual inspection (external)	3.1, 3.27	4.8.1	
C2 (every 6 months) 4/			
Thermal shock	3.14	4.8.8	
Shock (specified pulse) 5/	3.15	4.8.9	
Vibration 5/	3.16	4.8.10	
Terminal strength	3.18	4.8.12	2
Dielectric withstanding voltage 2/	3.11	4.8.6	
Insulation resistance 2/	3.10	4.8.5	
Electrical characteristics 2/ 3/	3.12	4.8.7	
Visual inspection (external)	3.1, 3.27	4.8.1	
Seal	3.9	4.8.4	
C3 (every 6 months)			
Overload (highest dc resistive load)	3.22	4.8.17	
Dielectric withstanding voltage 2/	3.11	4.8.6	
Insulation resistance 2/	3.10	4.8.5	2
Electrical characteristics 2/ 3/	3.12	4.8.7	
Visual inspection (external)	3.1, 3.27	4.8.1	
C4 (every 12 months) 4/ 5/			
Thermal shock	3.14	4.8.8	
Vibration (sinusoidal)	3.16	4.8.10.1	
Resistance to soldering heat	3.21	4.8.15	
Dielectric withstanding voltage 2/	3.11	4.8.6	2
Insulation resistance 2/	3.10	4.8.5	
Electrical characteristics 2/ 3/	3.12	4.8.7	
Visual inspection (external)	3.1, 3.27	4.8.1	
Seal	3.9	4.8.4	
C5 (every 36 months) 4/			
Magnetic interference (when specified)	3.19	4.8.13	
Coil life	3.20	4.8.14	
Salt atmosphere (corrosion)	3.23	4.8.16	
Acceleration	3.17	4.8.11	
Resistance to solvents	3.26	4.8.20	2
Dielectric withstanding voltage 2/	3.11	4.8.6	
Insulation resistance 2/	3.10	4.8.5	
Electrical characteristics 2/ 3/	3.12	4.8.7	
Visual inspection (external)	3.1, 3.27	4.8.1	
Seal	3.9	4.8.4	

See footnotes at end of table.

TABLE V. Group C inspection. - Continued.

1/ One intermediate current failure per 6-month retention period shall be permitted per FR groupings of similar relay types as approved by the qualifying activity.
2/ Coil resistance or coil current may be performed prior to dielectric withstanding voltage and insulation resistance. Testing sequence optional, except that dielectric withstanding voltage shall precede insulation resistance.
3/ Measurement of coil current is applicable only to relays with both coil transient suppression and polarity reversal diodes.
4/ Surface mounted style relays, or relays with spreader or spacer pads or ground pins, shall not be subjected to the testing of this group.
5/ Each mounting configuration to which a manufacturer is qualified will be represented during the normal continuous periodic testing period. It will usually take more than one periodic testing period to achieve testing of all of the applicable mountings.

4.8.2 Screening (see 3.7)

4.8.2.1 Run-in.

a. High temperature. For qualification inspection only; relays shall be subjected to maximum ambient temperature (see 3.1) with rated voltage or current on the coil circuit for 1 hour, for nonlatching relays; for latching relays, one coil shall be energized for 30 minutes. At the end of this period, the pickup value (voltage), or latch and reset voltage, shall be measured to determine compliance to 3.1. For latching, repeat the test after the other coil has been energized for 30 minutes. For group A testing, relays shall be subjected to maximum ambient temperature (see 3.1); the test chamber shall stabilize at maximum ambient temperature (see 3.1) after the specimens have been inserted into the test chamber. The test shall be performed with rated voltage or current on the coil for 15 minutes minimum for nonlatching relays weighing 1 ounce or less and 30 minutes minimum for relays weighing over 1 ounce. At the end of each period, the specified pickup value (voltage) shall be measured to determine compliance with 3.1.
For latching relays, one of the 2 coils shall be energized with rated voltage or current for 7 minutes 30 seconds minimum. For latching relays, repeat this test after the other coil has been energized with rated voltage or current for 7 minutes 30 seconds minimum. The specified pickup value (voltage) shall be measured to determine compliance with 3.1. While at this temperature, the relays shall be subjected to a 2,500 cycle run-in test. The cycling rate shall be calculated using the formulas below and the maximum operate and release times as specified, see 3.1 for the relay under test. For latching relays, use the latch/reset times. Relays shall have the contacts loaded as follows: Open circuit load voltage 10 to 50 millivolts (mV) dc or peak ac. The load current shall be 10 to 50 µA. The contact resistance or voltage drop, as applicable, of each pair of mated contacts shall be monitored during 40 percent minimum of each "on" and each "off" period. The test equipment shall automatically turn off when a failure occurs, or shall record every failure.

b. Low temperature. Following high temperature, for qualification only, relays shall be subjected to minimum ambient temperature (see 3.1) with the coil or coils de-energized for 1 hour. For group A testing, relays shall be subjected to minimum ambient temperature (see 3.1); the test chamber shall stabilize at minimum ambient temperature (see 3.1) after the specimens have been inserted into the test chamber. The test shall be performed with the coil or coils de-energized for 15 minutes minimum for relays weighing 1 ounce or less and 30 minutes minimum for relays weighing over 1 ounce. At the end of either period, the specified dropout value (voltage) shall be measured to determine compliance with 3.1. For latching relays, dropout voltage measurement is not required. While at this temperature, the relays shall be subjected to a 2,500 cycle run-in test in accordance with the procedure outlined in 4.8.2.1a.

For non-latching relays:

$$\underset{\text{(cycles per second)}}{\text{Maximum cycle rate}} = \frac{0.1}{\underset{\text{(seconds)}}{\text{Maximum operate time}} + \underset{\text{(seconds)}}{\text{Maximum release time}}}$$

For latching relays:

$$\underset{\text{(cycles per second)}}{\text{Maximum cycle rate}} = \frac{0.1}{\underset{\text{(seconds)}}{\text{2X Maximum latch / reset time}}}$$

4.8.3 Solderability (see 3.8). Relays shall be tested in accordance with method 208 of MIL-STD-202. The following detail and exception shall apply: All terminations of each part shall be tested.

4.8.4 Seal (see 3.9). Relays shall be tested in accordance with 4.8.4.1 or 4.8.4.2, as applicable. In case of dispute, method 1014 of MIL-STD-883, test condition B shall govern.

4.8.4.1 Relays sealed with a tracer gas. Relays sealed with a tracer gas shall be tested in accordance with method 112 of MIL-STD-202, or at the option of the manufacturer, method 1014 of MIL-STD-883. The following details shall apply:

a. Method 112 of MIL-STD-202:

(1) Test condition C, procedure IV. Relays shall be back-filled with a helium tracer gas (90 percent dry gas and 10 percent helium). Silicone oil shall not be used.

(2) Leakage rate sensitivity: 1×10^{-8} atm cm^3/s.

(3) Measurements after test: Not applicable.

b. Method 1014 of MIL-STD-883, test condition B (gross leak test not required).

4.8.4.2 Relays sealed without a tracer gas. Relays sealed without a tracer gas shall be tested in accordance with method 1014 of MIL-STD-883. At the option of the manufacturer, either 4.8.4.2a or 4.8.4.2b may be used. The following details shall apply:

a. Method 1014 of MIL-STD-883:

(1) Test condition A_1 or A_2.

(2) Measurements after test: Perform a gross leak test in accordance with method 112 of MIL-STD-202, test condition A, B, or D. Silicone oil shall not be used. At the option of the manufacturer, the gross leak test of method 1014 of MIL-STD-883, test condition C may be used.

b. Method 1014 of MIL-STD-883, test condition B (gross leak test not required).

4.8.5 Insulation resistance (see 3.10). Relays shall be tested in accordance with method 302 of MIL-STD-202 with the relay in the energized and de-energized (latch/reset) positions. Unless otherwise specified (see 3.1), the following details shall apply:

a. Test conditions: A (for relays with coil and contact ratings both below 60 volts) and B (for all other relays).

b. Points of measurement: As specified in points of application in table VI.

c. Attributes data is acceptable.

4.8.6 Dielectric withstanding voltage (see 3.11). Relays shall be tested as specified in 4.8.6.1 and in accordance with 4.8.6.2. Testing in accordance with 4.8.6.2 is not required for group A, B, C3, and C4.

4.8.6.1 At atmospheric pressure. Relays shall be tested in accordance with method 301 of MIL-STD-202. Unless otherwise specified (see 3.1), the following details shall apply:

a. Points of application and magnitude of test voltage: As shown in table VI.

b. Maximum leakage current: 100 μA. For group A, leakage current measuring device shall be capable of measuring the leakage current to an accuracy of at least 10 percent.

c. Duration of application: 60 seconds minimum for qualification and groups B and C tests; 5 (60 Hz) cycles minimum for group A tests on test equipment which has an adequate response time to measure the leakage current and is approved by the qualifying activity. For group A tests on other than automatic test equipment such as bench setup, the application time shall be 5 seconds minimum.

d. Attributes data is acceptable.

TABLE VI. Test details for dielectric withstanding voltage.

Points of application	Test voltage
Between case, frame, or enclosure and between all contacts in the energized and de-energized positions (latch and reset positions for latching relays) Between case, frame, or enclosure and coil(s) (latch and reset positions for latching relays) Between all contacts and coil(s) (latch and reset positions for latching relays) Between open contacts in the energized and de-energized positions (latch and reset positions for latching relays) Between coils of latching relays (latch and reset positions for latching relays) Between contact poles in the energized and de-energized positions (latch and reset positions for latching relays) (applicable to multipole relays)	350 ±5 percent V rms or in accordance with individual specification

4.8.6.2 At reduced barometric pressure. Relays shall be tested in accordance with method 105 of MIL-STD-202. The following details shall apply:

a. Method of mounting: Normal mounting means.

b. Test condition: C.

c. Tests during subjection to reduced pressure: Unless otherwise specified (see 3.1), as specified in 4.8.6.1, except test voltage shall be 350 V rms.

d. Points of application of test voltage: All terminals to case.

e. Duration of application: 60 seconds minimum for qualification and groups B and C tests.

f. Attributes data is acceptable.

4.8.7 Electrical characteristics (see 3.12).

4.8.7.1 Static contact resistance (see 3.12.1). Relays shall be tested in accordance with method 307 of MIL-STD-202. The following details and exception shall apply:

a. Method of connection: The point of measurement shall be on leads external to the case. Suitable jigs and fixtures shall be used.

b. Test load: 10 mA maximum at 6 V maximum (dc or peak ac).

c. Post test loads for high level life and intermediate current: Current and voltage shall be the same as the life or intermediate current test or 100 mA maximum at 28 V dc maximum.

d. Points of measurements:

(1) Between all normally closed mated contacts.

(2) Between all normally open mated contacts, with the coil energized with rated coil voltage (or current). For latching relays, coils may be energized or de-energized.

e. Number of activations prior to measurement: None.

f. Number of test activations: Three.

g. Number of measurements per activation: One in each closed contact position.

4.8.7.2 Specified pickup or latch/reset, hold, and dropout values (voltages) (see 3.12.2). Specified pickup or latch/reset, hold, and dropout values (voltage) shall be measured as specified in 4.8.7.2.1, 4.8.7.2.2, 4.8.7.2.3, or 4.8.7.2.4. Unless otherwise specified (see 3.1), for qualification inspection, the relay shall be mounted in each of three mutually perpendicular planes. For quality conformance inspection, the relay mounting position is optional. A suitable indicating device shall be used to monitor contact position. During the test, all contacts shall not change state (break or remake) when the coil is energized at or above the specified pickup or latch/reset value (voltage); when the coil voltage is lowered to any value at or above specified hold value (voltage); or when the coil voltage is reduced from the specified dropout value (voltage) to zero. It is permissible to perform specified pickup or latch/reset, hold, and dropout values (voltages) using step function voltage changes as specified in 4.8.7.2.1 or 4.8.7.2.2, 4.8.7.2.3, and 4.8.7.2.4. Due to the fact that slow ramping will overheat relay coils and vary specified pickup or latch/reset, hold, and dropout values (voltages), the step function method shall be the governing method in cases of dispute.

4.8.7.2.1 Specified pickup value (voltage) (not applicable to latching relays). The voltage shall be increased from zero until the relay operates, and the specified pickup value (voltage) shall be measured. It is permissible to perform specified pickup value (voltage) using a step function voltage change as follows and as illustrated on figure 3.

a. Step up to the specified pickup value (voltage), contacts should have transferred and all normally-open contacts should be making.

b. Increase to rated coil voltage.

c. Step down to specified hold value (voltage). Normally-open contacts must still be making.

d. Step down to specified dropout value (voltage), all contacts should have transferred and all normally-closed contacts should be making.

e. Step down to zero voltage.

4.8.7.2.2 Specified latch/reset value (voltage) (applicable to latching relays only). Before measuring the specified latch/reset value (voltage), establish that all contacts are in their last energized mode for latching relays or in the plus (+) contrasting color bead mode for single coil relays (see 3.1). If not, apply rated voltage to establish last energized contact position. Gradually increase the voltage to the latching coil or in the latching direction for single coil relays until the contacts transfer and the specified operate (latch) value (voltage) shall be measured. Apply rated latching voltage and reduce to zero. Gradually increase the voltage to the reset coil or in the reset direction for single coil relays until the contacts transfer and the specified reset value (voltage) shall be measured. It is permissible to perform maximum latch/reset value (voltage) using a step function as follows and as illustrated on figure 3.

a. Step up to specified latch value (voltage) for latching relays or in the latch direction for single coil relays. The contacts shall have transferred to the latch position.

b. Step up to rated voltage and then step down to zero.

c. Step up to specified reset value (voltage) for latching relays or in the reset direction for single coil relays. The contacts shall have transferred to reset position.

d. Step up to rated voltage and then step down to zero.

4.8.7.2.3 Specified hold value (voltage) (not applicable to latching relays). Rated voltage shall be applied to the coil. The voltage shall then be reduced to the specified hold value (voltage) (see 3.1 and 6.10). All contacts shall not change state. It is permissible to perform this test using the step function voltage program described in 4.8.7.2.1 and figure 3.

4.8.7.2.4 Specified dropout value (voltage) (not applicable to latching relays). Rated voltage shall be applied to the coil. The voltage shall then be gradually reduced until all contacts return to the de-energized position and the specified dropout value (voltage) shall be measured. It is permissible to perform this test using the step function voltage program described in 4.8.7.2.1 and figure 3.

Nonlatching relays

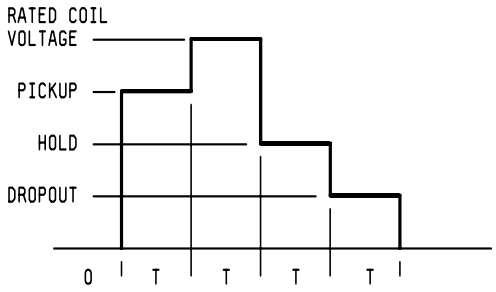

Latching relays

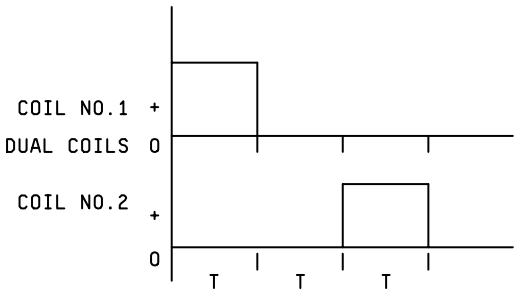

FIGURE 3. Pickup or latch/reset hold and dropout sequencing.

4.8.7.3 Coil resistance or coil current (see 3.12.3).

4.8.7.3.1 Coil resistance (see 3.12.3.1). Relay coils shall be tested in accordance with method 303 of MIL-STD-202.

4.8.7.3.2 Coil current (when specified see 3.12.3.2). When rated voltage is applied to the coil terminals, the current must be within the limits as specified (see 3.1). Apply rated voltage for 5 seconds maximum.

4.8.7.4 Operate and release time (see 3.12.4). Operate and release time of all contacts shall be measured using an oscilloscope or other acceptable means approved by the qualifying activity. Rated voltage shall be applied to the coil. Contact load conditions shall be 6 volts dc maximum or peak ac at 10 mA maximum. The circuit shown on figure 4, or equivalent, shall be used. The operate and release time shall be exclusive of contact bounce or contact stabilization time. Timing measurements shall be made on all contact sets. Release time is not applicable to latching relays.

4.8.7.4.1 Break before make (see 3.12.4.1). The circuit shown on figure 5 or an equivalent circuit approved by the qualifying activity shall be used to monitor contact position.

4.8.7.5 Contact dynamic characteristics (see 3.12.5).

4.8.7.5.1 Contact bounce (see 3.12.5.1). Contact bounce shall be measured on each contact set using an oscilloscope or other acceptable means approved by the qualifying activity. The trace shall show contact switching at operate and release and appropriate timing markers when using an oscilloscope. Rated voltage shall be applied to the coil. Contacts shall be loaded with 6 volts dc maximum or peak ac at 10 mA maximum. After high level rated load life and intermediate current tests, contact bounce shall be measured at 100 mA maximum at 28 V dc maximum. A contact bounce shall be considered any occurrence equal to or greater than 90 percent of the open circuit voltage with a pulse width of 10 microseconds or greater. The circuit shown on figure 4, or equivalent, shall be used.

4.8.7.5.2 Contact stabilization time (see 3.12.5.2). Contact stabilization time shall be measured on each contact set using an oscilloscope or other acceptable means approved by the qualifying activity. The equipment shall have the capability of indicating a failure pulse width of greater than 1 μs. The trace shall show contact switching at operate and release, appropriate timing markers and maximum allowable contact voltage drop markers (which equates to the allowable static contact resistance) when measured using an oscilloscope. Rated voltage shall be applied to the coil. Contacts shall be loaded with 50 mV dc maximum or peak ac at 50 mA maximum. Contact stabilization time shall be defined as the maximum time allowed for the contacts to reach and maintain a static contact resistance state following the actual operate or release time of the relay (essentially, it is the sum of the contact bounce time and the time for the dynamic contact resistance to stabilize to the static contact resistance). After high level rated load life and intermediate current tests, the contacts shall be loaded at 100 mA maximum at 28 V dc maximum and contact bounce in lieu of contact stabilization time shall be measured as specified in 4.8.7.5.1.

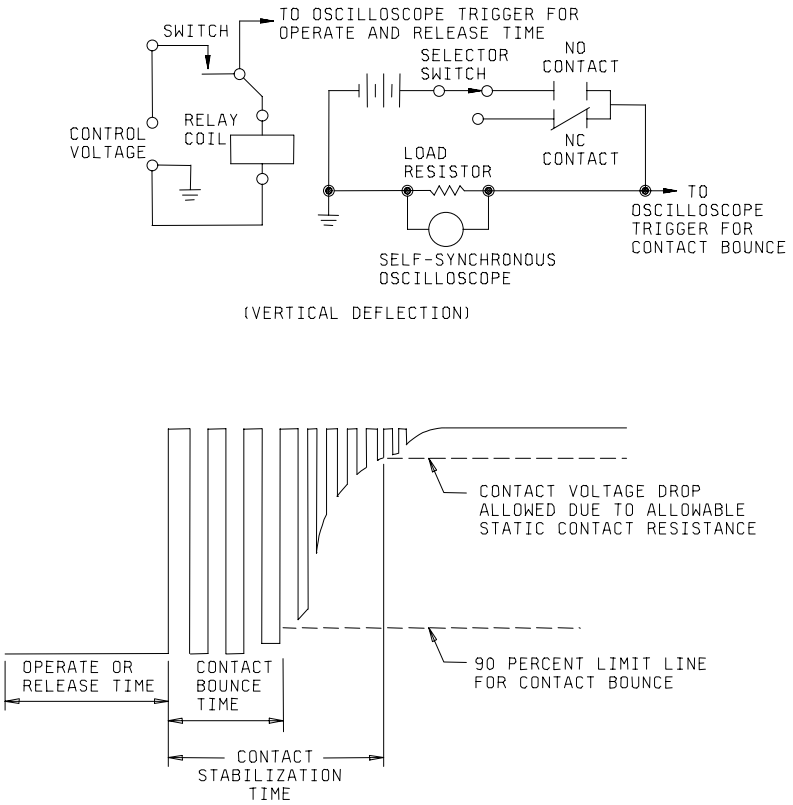

FIGURE 4. Typical circuit for operate and release time, contact bounce, and contact stabilization time with typical traces.

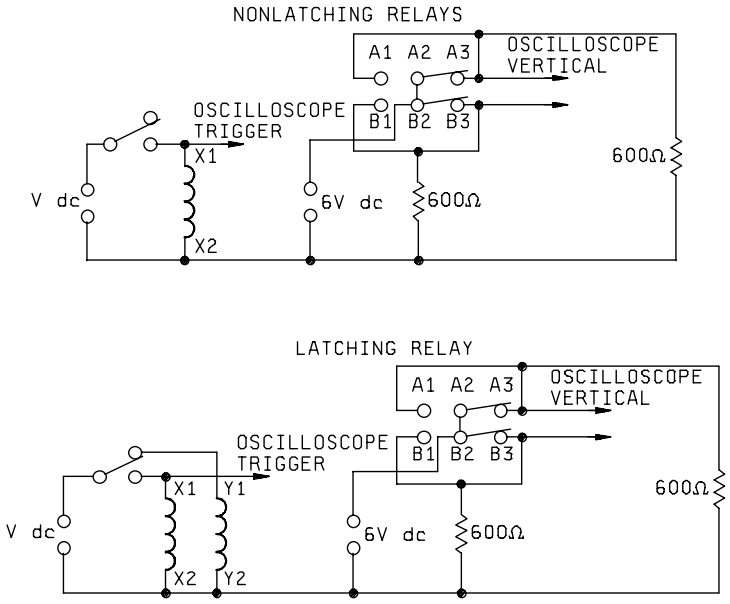

FIGURE 5. Typical break before make test circuits.

4.8.7.6 Coil transient suppression and diode block integrity test (see 3.12.6).

4.8.7.6.1 Coil transient suppression (applicable to dc operated relays with internal coil transient suppression (see 3.12.6.1). The coil shall be connected as shown on figure 6 or by an equivalent test circuit.

NOTE: Voltage greater than the maximum specified may damage the coil transient suppression device.

a. The switching relay shall be a mercury wetted contact switching relay. E is the rated coil voltage for the relay under test. The switching relay is operated from a source voltage independent of E. The oscilloscope shall have a rise time of .020 μs or less. The horizontal (time) deflection scale shall be set at 0.5 to 1 ms per division (.5 to 1 ms/cm), and the vertical (voltage) deflection to be such that the vertical gain provides accuracy in reading. Example: 5 V/cm for a 12 V back EMF limit, or 10 V/cm for a 24 V back EMF limit. Both horizontal (time) and vertical (voltage) deflection traces shall be of a calibrated grid spacing such as cm or mm).

b. The source, E, shall be a low impedance source capable of delivering the rated coil supply voltage with no limiting resistor or potentiometer used to regulate the line voltage.

c. The switching relay shall be closed for a minimum of ten times the operate time of the test relay, or switching relay whichever is longer, to allow the oscilloscope and circuit network to stabilize and then opened to obtain the induced voltage deflection trace. The relay is to be driven at a 10 ±2 Hz cycling rate with approximately equal open and closed times.

   (1) The reading shall be observed on the oscilloscope or other equivalent electronic test instrumentation. The magnitude of the induced voltage transient shall be noted. A typical trace is presented on figure 7.

   (2) The maximum value of three consecutive readings shall be noted.

d. For group A testing, only one measurement and other suitable test methods may be used to verify that the back EMF (coil kick) is within the specified limit.

4.8.7.6.2 Diode block integrity test (applicable to dc operated relays with polarity reversal protection) (see 3.12.6.2). With applicable voltage (see 3.1) applied to the relay coil circuit in the reverse direction, monitor leakage current with a dc micro ammeter or oscilloscope or qualifying activity approved test equipment. Leakage current shall not exceed the value specified (see 3.1).

4.8.7.7 Neutral screen (applicable to latching relays only) (see 3.12.7). Relays shall be tested as follows:

a. Apply rated coil voltage to both coils simultaneously for a period of 10 ms minimum. After voltage is removed, determine if the relay contacts are in a neutral position.

b. If the relay contacts will not maintain a neutral position, repeat step 4.8.7.7a. twice. A relay which will not assume a neutral position for these three successive cycles is considered an acceptable part and does not require further testing. Relays which remain in a neutral position shall be tested as follows:

(1) Apply a 10 ±1 ms pulse of the maximum allowable (at +25°C) latch voltage to the latch coil. Verify that the relay has latched. Failure to latch shall be cause for rejection.

(2) Repeat step 4.8.7.7a. above.

(3) Apply a 10 ±1 ms pulse of the maximum allowable (at +25°C) reset voltage to the reset coil. Verify that the relay has reset. Failure to reset shall be cause for rejection.

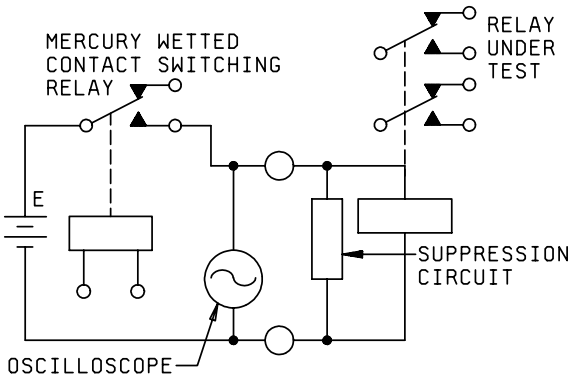

FIGURE 6. Coil transient suppression test circuit.

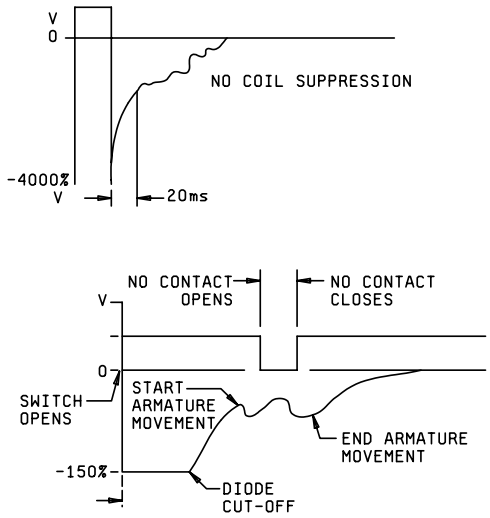

FIGURE 7. Typical transient voltage.

4.8.8 Thermal shock (see 3.14). Relays shall be tested in accordance with method 107 of MIL-STD-202. The following details and exceptions shall apply:

a. Special mounting: Relays shall be suspended in the test chamber by twine, test socket, or other nonheat-conducting material. Test leads may be used for mounting; however, they shall not exceed the diameter or cross section of the device lead. (NOTE: When test sockets are used, the surface of the header shall not directly contact with the surface of the socket and the leads of the socket shall not exceed the diameter or cross section of the device lead).

b. Test condition: B, except exposure time at temperature extreme during the fifth cycle, shall be for 2 hours each.

c. Measurements at each temperature extreme during steps 1 and 3 of this fifth cycle at the end of each temperature exposure, and with the relays still in the conditioning chamber, the specified pickup or latch/reset and dropout values (voltages) and operate and release time, shall be measured as specified in 4.8.7.2, and 4.8.7.4, respectively. Specified pickup or latch/reset and dropout values (voltages) shall be measured in any position.

d. Examination after test: Relays shall be visually examined for cracking, peeling, and flaking of the finish, and the insulation resistance and dielectric withstanding voltage shall then be measured as specified in 4.8.5 and 4.8.6.1.

4.8.9 Shock (specified pulse) (see 3.15). Unless otherwise specified (see 3.1), relays shall be tested in accordance with method 213 of MIL-STD-202. The following details and exceptions shall apply:

a. Mounting method: For relays having flanges or studs, mounting shall be by the flanges or studs; and for relays without flanges, mounting shall be by plugging into sockets, or other suitable means approved by the qualifying activity.
b. Test condition: A, B, or C, as applicable (see 3.1).

c. Electrical-load conditions: In each direction of shock, the coil shall be de-energized during two shocks and energized with rated voltage during one shock.

d. For latching relays: In each direction there shall be two pulses in the latch position and two pulses in the reset position, with no coil voltage being applied during these pulses.

e. Measurements during shock: Contacts shall be monitored with an adequate test circuit as approved by the qualifying activity. The test circuit shall verify that no opening of closed contacts in excess of 10 μs and no false closure or bridging of open contacts occurs in excess of 1 μs. The contact load shall be 10 mA maximum at 6 V dc maximum (dc or peak ac).

f. Examination after test: Relays shall be examined for evidence of structural failure or other damage which might impair the operation of the relay.

4.8.10 Vibration (see 3.16).

4.8.10.1 Vibration (sinusoidal). When specified (see 3.1), relays shall be tested in accordance with method 204 of MIL-STD-202. The following details and exceptions shall apply:

a. Method of mounting: As specified in 4.8.9a.

b. Electrical-load conditions: For qualification and group C inspections, relays shall be tested with the coil energized for 2 hours at rated voltage and with the coil de-energized for 2 hours, in each of the three mutually perpendicular (x, y, and z) directions (For latching relays, relays shall be tested with the coils de-energized; 2 hours with the latch coil last energized and 2 hours with the reset coil last energized, in each of the 3 mutually perpendicular relay axes). Contacts shall be loaded as specified in 4.8.10.1d.

c. Test condition: D, except vibration level is the lesser of .195 inch (4.95 mm) double amplitude or 30 G, and frequency range is 10 to 3,000 Hz.

d. Tests during vibration: As specified in 4.8.9e.

e. For group A testing, only one cycle shall be performed over the frequency range of 100 Hz to 3,000 Hz when specified (see 3.1). The relay shall be vibrated in the direction of contact motion. At the option of the manufacturer, the relay production lot may be divided in three equal groups and each group shall be tested in one of three mutually perpendicular axes (X, Y, and Z). When relays are tested as specified in the optional procedure, a failure of any relay in any axis shall require 100 percent inspection of all relays in the production lot in each axis. For all contact forms except contact form "A", the cycle shall consist of 3 minutes up with the coil energized with rated voltage and 3 minutes down with coil de-energized. The cycle for form contact "A" shall consist of 3 minutes up with the coil de-energized and 3 minutes down with the coil energized. Latching relays shall remain in each latched position with no voltage applied to the coils 3 minutes in the latch position and 3 minutes in the reset position.

f. Examination after test: Prior to removal from test fixture and without disturbing the relay, apply maximum over the temperature range pickup voltage value (see 3.1) to the coil, and then verify that relay contacts transfer. Remove coil voltage, and then verify that relay contacts transfer. For latching relays, apply the maximum over the temperature range latch voltage and verify that the relay contacts transfer, then apply the maximum over the temperature reset voltage and verify that the relay contacts transfer. Failure of relay contacts to transfer shall be cause for rejection. After removal from test fixture, the relays shall then be inspected for evidence of structural failure or other damage which might impair the operation of the relay.

4.8.10.2 Vibration (random). Relays shall be tested in accordance with method 214 of MIL-STD-202. The following details and exceptions shall apply:

a. Method of mounting: As specified in 4.8.9a.

b. Electrical-load conditions: For qualification and group C inspections, relays shall be tested with the coil energized at rated voltage for 15 minutes and with the coil de-energized for 15 minutes, in each of three mutually perpendicular (x, y, and z) directions. Latching relays shall be tested with the coils de-energized; 15 minutes with the latch coil last energized and 15 minutes with the reset coil last energized. When applicable to group A inspection, the test time shall be 3 minutes for each state described above. Contacts shall be monitored as specified in 4.8.10.2d.

c. Test condition: IG (0.4 G^2/Hz, 23.91 rms G).

d. Tests during vibration: As specified in 4.8.9e.

e. Examination after test: As specified in 4.8.10.1f.

4.8.11 Acceleration (unless otherwise specified, see 3.1 and 3.17). Relays shall be tested in accordance with method 212 of MIL-STD-202. The following details and exceptions shall apply:

a. Mounting of specimens: As specified in 4.8.9a.

b. Test conditions: Unless otherwise specified (see 3.1), test condition A, 50 G's (acceleration shall be applied in each direction along three mutually perpendicular axes (x, y, and z) of the specimen; one axis shall be in the direction most likely to cause malfunction). In each direction, the coil shall be de-energized for 5 minutes, rated coil voltage shall be momentarily applied; and the voltage shall be reduced to the maximum ambient pickup voltage as specified (see 3.1) for 5 minutes. Latching relays shall remain in each latched position with no voltage applied to the coils. Contacts shall be monitored for proper position.

c. Examination after test: As specified in 4.8.10.1f.

4.8.12 Terminal strength (see 3.18). Relays shall be tested in accordance with method 211 of MIL-STD-202 in accordance with the following, as applicable. Unless otherwise specified herein, two terminals of each discrete design, size, and configuration shall be tested; however, if there is only one of such design, size, and configuration, it shall be tested.

4.8.12.1 Pull test (all terminal types). Terminals shall be tested as specified in test condition A, the force shall be as specified (see 3.1).

4.8.12.2 Bend test (all terminal types). Terminals shall be tested as specified in test condition B (two bends) or C, as applicable. Loads for test condition C shall be as specified (see 3.1).

4.8.12.3 Twist test (wire lead terminals only) (not applicable to relays with spreader pads or leads less than .50 inch (12.7 mm) in length). All terminals shall be tested as specified in test condition D, except during application of torsion, each terminal shall be rotated 45° in one direction, then returned to start; rotated in opposite direction 45°, then returned to start. Each terminal shall be subjected to two such rotations and returns. Each terminal shall be held at a point .75 inch (19.0 mm) from the point of emergence from the relay, or terminal end for relays with terminals less than .75 inch (19.0 mm), and in one plane shall be bent 20° ±5° in one direction, then returned to start; bent in opposite direction 20° ±5°, then returned to start. This procedure shall then be repeated in the perpendicular plane. Following these tests, relays shall be examined for evidence of loosening or breaking of the terminals and other damage that could adversely affect the normal operation of the relay; the requirements of 3.26 are not applicable.

4.8.13 Magnetic interference (when specified, see 3.1 and 3.19). The relay under test and eight similar relays shall be mounted in the same physical orientation by nonmagnetic means, as shown on figure 8. Unless otherwise specified, grid-spaced relays shall be mounted so that all terminals are positioned in the closest possible grid pattern. Unless otherwise specified, the spacing between terminals and tops of adjacent terminals shall be as shown on figure 8. Pickup or latch/reset and dropout voltage shall be measured on the relay under test as specified in 4.8.7.2 with the coils of the eight outer relays energized at rated voltage (the magnetic polarity of each relay shall be similarly oriented). This measurement shall be repeated with the coils of the eight outer relays de-energized.

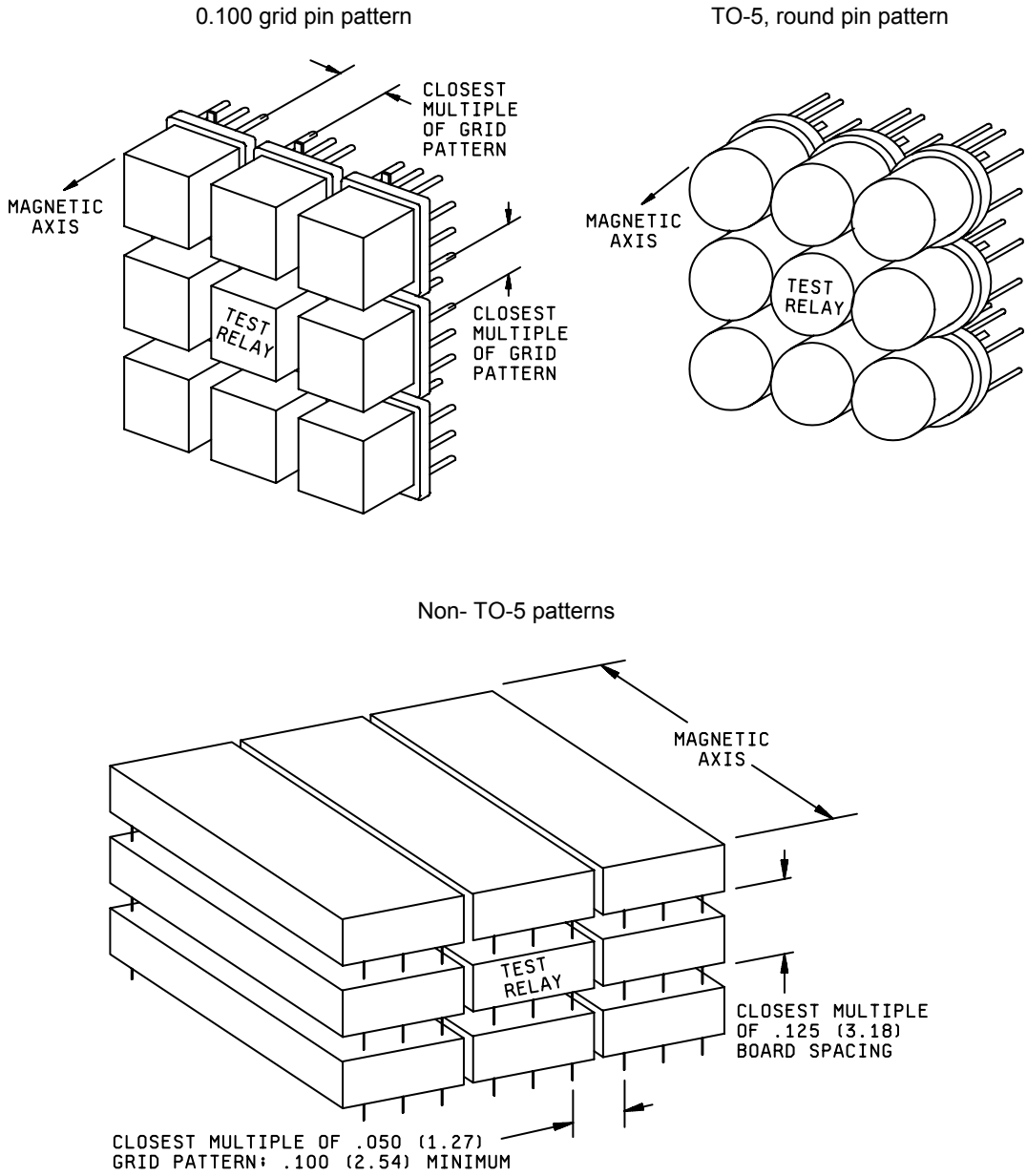

FIGURE 8. Mounting arrays for adjacent similar relays.

4.8.14 Coil life (unless otherwise specified, see 3.1) (see 3.20). Relays shall be tested for 1,000 hours as follows (see figure 9). For latching relays, the test time shall be equally divided between the two coils.

a. Relays may be mounted as specified in 4.3.5. Each contact terminal shall be connected as specified in 4.8.7.1a.

b. During the maximum temperature portion of the test, rated coil voltage (see 3.1) shall be applied continuously and at least half of the normally open contacts shall carry rated current. During room temperature and minimum temperature exposures, the coil shall be de-energized and contacts shall not be loaded. Ambient temperatures shall be varied as shown on figure 9, with heating and cooling rates not to exceed +1°C per second average. The portion of the cycle run at minimum temperature shall be approximately 10 percent of the test cycle time.

c. After the first 100 hours, and while still at the low temperature extreme, contact resistance (or voltage drop) and operate and release time shall be measured as specified in 4.8.7.1 and 4.8.7.4 and the values shall be recorded. Measurements of coil resistance (or coil current as specified, see 3.1) and contact resistance as specified in 4.8.7.3 and 4.8.7.1, shall be taken at room temperature initially, then again after 250 ±25 hours, 500 ±25 hours, and 750 ±25 hours and the values shall be recorded. Specified pickup, hold, and dropout values (voltages) measurements shall be made as specified in 4.8.7.2 during the last temperature cycle after allowing the relay to stabilize, de-energized, at each of the temperature extremes, and the values shall be recorded. For latching relays, after the first 50 hours, and while still at the low temperature extreme, contact resistance and operate time shall be measured as specified in 4.8.7.1 and 4.8.7.4 respectively and the values shall be recorded. Measurements of coil resistance or coil current as applicable (see 3.1 and 4.8.7.3), and contact resistance as specified in 4.8.7.1 shall be taken at room temperature initially, then again after 125 hours ±12.5 hours, 250 hours ±12.5 hours, and 375 hours ±12.5 hours and the values shall be recorded. Specified latch and reset voltage measurements shall be made as specified in 4.8.7.2.2 during the last temperature cycle after allowing the relays to stabilize, de-energized, at each of the temperature extremes, and the values shall be recorded.

d. After the relay(s) have been subjected to the coil life temperature cycles, measurements shall then be taken at room temperature of dielectric withstanding voltage, insulation resistance, contact resistance, coil resistance (or coil current), operate and release time, and contact bounce as specified in 4.8.6.1, 4.8.5, 4.8.7.1, 4.8.7.3, 4.8.7.4, and 4.8.7.5.1, respectively.

e. Examination after test: As specified in 4.8.9f.

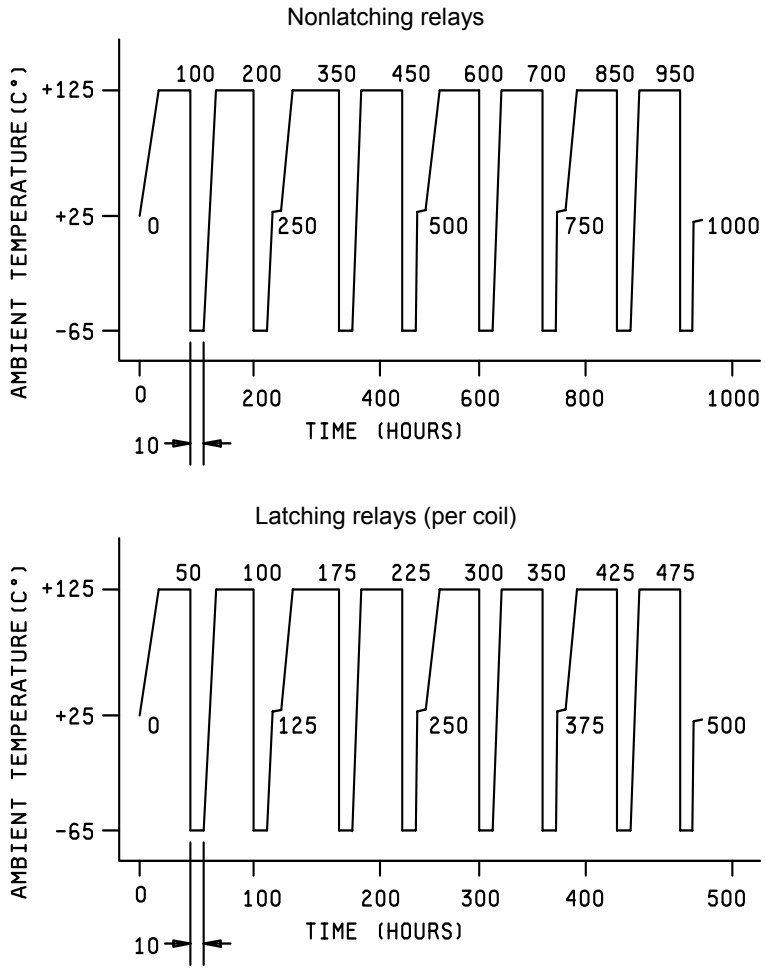

FIGURE 9. Coil life ambient temperatures.

4.8.14.1 Coil endurance (see 3.20.1). Relays shall be tested for 114 hours minimum as follows:

a. The coil resistance shall be tested in accordance with 4.8.7.3.1 prior to testing and shall be as specified (see 3.1).

b. Relays may be mounted as specified in 4.3.5. Each contact terminal shall be connected as specified in 4.8.7.1a.

c. The test chamber shall be controlled to maintain the maximum specified ambient temperature (see 3.1).

d. Apply the maximum coil voltage (see 3.1) at a cycling rate of 4 ±.4 seconds on and 2 ±.2 seconds off for 114 hours minimum.

e. For latching relays, the test time shall be equally divided between the two coils.

f. Following the test, the coil resistance shall be measured in accordance with 4.8.7.3.1 and shall be as specified (see 3.1).

4.8.15 Resistance to soldering heat (see 3.21). Relays shall be tested in accordance with method 210 of MIL-STD-202. The following details and exceptions shall apply:

a. Depth of immersion in molten solder: Within .060 ±.020 inch (1.52 ±0.51 mm) of the relay base.

b. Test condition: B.

c. Measurements after test: Insulation resistance, contact resistance, specified pickup or latch/reset, hold, and dropout values (voltages), and coil resistance (or coil current as specified, see 3.1) shall be measured as specified in 4.8.5, 4.8.7.1, 4.8.7.2, and 4.8.7.3, respectively.

d. Examination after test: As specified in 4.8.9f.

4.8.16 Salt spray or salt atmosphere (corrosion) (see 3.23). Relays shall be tested as specified in 4.8.16.1 or, when specified (see 3.1), in accordance with 4.8.16.2.

4.8.16.1 Salt spray, MIL-STD-202 (see 3.23). Unless otherwise specified (see 3.1), relays shall be tested in accordance with method 101 of MIL-STD-202. The following details and exceptions shall apply:

a. Applicable salt solution: 5 percent.

b. Test condition: B.

c. Examination after test: Relays shall be examined for evidence of breaking, cracking, flaking, peeling, chipping, blistering of the finish, and exposure of base metal due to corrosion that can adversely affect the operation or performance of the relay.

4.8.16.2 Salt atmosphere (corrosion), MIL-STD-750 (when specified, see 3.1). Relays shall be tested in accordance with method 1041 of MIL-STD-750. The following detail shall apply:

Examination after test: As specified in 4.8.16.1c.

4.8.17 Overload (applicable to high level relays only) (see 3.22). Relay contacts (both normally open and normally closed) shall be subjected to the tests specified in 4.8.17.1 through 4.8.17.2, as applicable. For double-throw relays, separate tests shall be performed for the normally open and the normally closed contacts. Relay coil energization shall be nonsynchronous with the power supply for ac loads. The number of cycles shall be 100 for dc contact loads, and 200 for ac contact loads ("on" and "off" times shall be approximately equal). The coil shall be energized at rated voltage. Overload current shall be twice rated load current. The opening and closing of all contacts under test shall be continuously monitored to detect switching of the contacts. The equipment shall be capable of monitoring 40 percent minimum of the actual opened and closed time of each contact. The equipment shall automatically cut off when a failure occurs, or shall record any failures. The relay case shall be connected to system ground through a normal-blow fuse rated at 5 percent of the test current or 100 mA, whichever is greater. After the test, the fuse shall be tested for electrical continuity.

4.8.17.1 Resistive load. Suitable noninductive resistors shall be used. Cycling rate shall be 20 ±2 cycles per minute (cpm). This test is conducted in group Q4 and C3 only.

4.8.17.2 Inductive load. Cycling rate shall be 10 ±1 cpm. Inductive load testing shall be performed as recommended by MIL-HDBK-338 and approved by the qualifying activity.

4.8.17.2.1 Inductive load, dc. Unless otherwise specified (see 3.1), dc inductive loads shall be computed in accordance with the following procedure:

a. The relay shall be mounted in its normal operating position on a nonmagnetic plate with no immediately adjacent metal.

b. The load circuit shall be energized through a bounce free contact from a power supply regulated to within 5 percent of the specified rated voltage as shown on figure 10.

c. By measuring the time for the current to reach 63 percent of its final value, the dc inductance is calculated as:

$$L = Rt$$

Where:
L is the inductance in henries,
R is the resistance of the load circuit, and
t is the time in seconds for current to reach 63 percent of its final value.

4.8.17.2.2 Inductive load, ac. The load shall consist of inductive and resistive elements with 0.7 ±0.05 lagging power factor at the voltage and frequency specified (see 3.1).

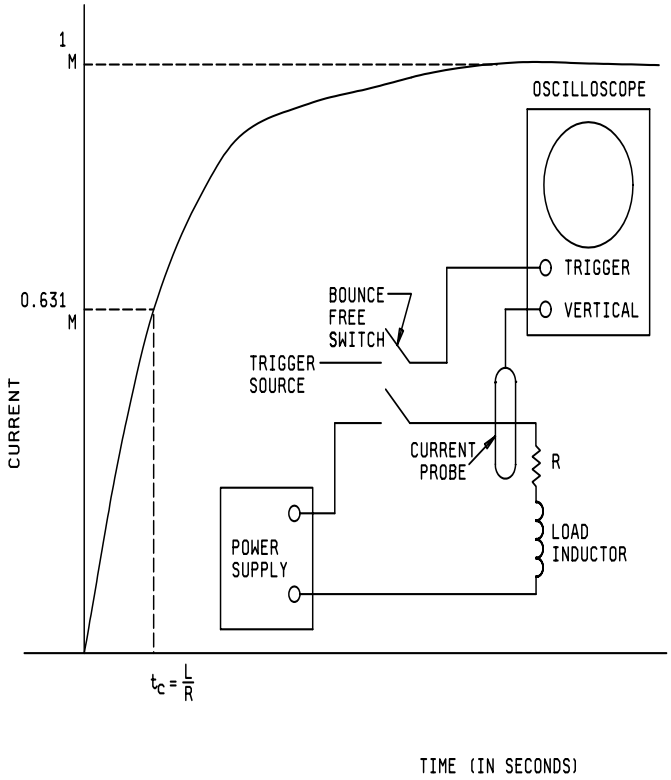

FIGURE 10. DC inductive load (inductive current rise time curve).

4.8.18 Life (see 3.24 and 6.8). Unless otherwise specified (see 3.1), relays shall be operated with contacts loaded in accordance with 4.3.3, 4.8.18.1 and 4.8.18.2, as applicable. Each relay case shall be connected to system ground through an individual normal-blow fuse rated at the greater of 100 mA or 5 percent of load current. The ambient temperature of the interior of the test chamber shall be maximum ambient temperature (see 3.1). The contact resistance or voltage drop, as applicable, shall be monitored during 40 percent minimum of each "on" and each "off" period. The monitoring equipment shall automatically hold the relay under test in the state in which the failure occurs (energized or de-energized) and the contact voltage shall be removed. All contacts in each sample unit shall switch identical loads. Following cycling, the electrical continuity of each case-grounding fuse shall be checked.

4.8.18.1 High-level load. Cycling rate shall be 20 ±2 cycles per minute for 100,000 cycles. Suitable resistors shall be used. Current shall be rated resistive current as specified (see 3.1).

4.8.18.2 Low level load. The maximum cycling rate shall be 20 cycles per second until failure. Each contact load shall be 10 to 50 μA at 10 to 50 mV (dc or peak ac). The coil shall be energized at rated voltage during 50 ±10 percent of each operation.

4.8.19 Intermediate current (see 3.24). Intermediate current shall not be considered a low level or high level contact load rating (see 6.1.1). Relays shall be tested as specified in method 312 of MIL-STD-202. The following details and exceptions shall apply:

a. Maximum contact resistance: As specified in 3.24.

b. Coil energizing voltage: Rated voltage (see 3.1).

c. Cycling rate: 10 ±2 cycles per minute. Minimum of 75 percent coil "ON" time for nonlatching relays. For latching relays, the relay shall be in each position for approximately one-half the cycle time. Each coil shall be energized for a minimum of 75 percent of each operation.

d. Contact current/voltage: 100 mA at 28 V dc.

e. Monitoring: At least 40 percent of the closed time of each contact during each operation shall be monitored for contact resistance.

f. Number of cycles: 50,000 cycles.

g. Ambient temperature: +125°C minimum.

4.8.20 Resistance to solvents (see 3.26). Relays shall be tested in accordance with method 215 of MIL-STD-202 except temperature of solvents a, b, and d shall be maintained at +63°C to +70°C. The following details and exceptions shall apply:

a. Portion to be brushed: All marking.

b. Optional procedure for solvent d is not applicable.

c. Specimens to be tested: One sample shall be tested with each solvent solution. For qualification inspection, samples in excess of the available number of solvents shall be exempt from test. For group C testing, two additional samples shall be selected. The additional samples may be electrical rejects from group A2.

d. Examination: Specimens shall be examined for legibility of marking.

4.8.21 RF testing (see 3.13). The frequency range of the RF test equipment shall be as specified (see 3.1 and 6.8).

4.8.21.1 Environmental conditions.

a. Temperature: 20°C ±5°C .

b. Humidity: Relative humidity not exceeding 80 percent.

4.8.21.2 Relay contact terminations.

a. Unless other impedance is specified (see 3.1), all unused poles shall be terminated in 50 Ω load.

b. Unless other impedance is specified (see 3.1), all unused connections on the pole being tested shall be terminated in 50 Ω load.

4.8.21.3 Insertion loss measurements (see 3.13.1). Insertion loss measurements shall be made within 8 hours of calibration. Recalibrate as many times as needed to finish readings. Test shall be done in accordance with 4.8.21.1 and 4.8.21.2.

4.8.21.4 VSWR measurements (see 3.13.2). VSWR readings shall be made within 8 hours of calibration.
b. Recalibrate as many times as needed to finish readings. Test shall be done in accordance with 4.8.21.1 and 4.8.21.2.
4.8.21.5 Isolation measurements (see 3.13.3). Isolation readings shall be made within 8 hours of calibration. Recalibrate as many times as needed to finish readings. Test shall be done in accordance with 4.8.21.1 and 4.8.21.2.

4.8.21.6 RF power handling capability (see 3.13.4). The RF power sources shall be capable of furnishing the specified rated power to the input of the relay (see 3.1). Unless otherwise specified (see 3.1), the output of the relay shall be terminated in a 50 Ω load. The relay shall be at ambient room temperature prior to start of test. The power source shall be adjusted to the highest specified frequency and the specified rated power. Apply this power to the input of the relay for at one hour. At the end of this time, perform the inspections to verify the specified RF characteristics are within limits.

5. PACKAGING

5.1 Packaging. For acquisition purposes, the packaging requirements shall be as specified in the contract or order (see 6.2). When packaging of materiel is to be performed by DoD or in-house contractor personnel, these personnel need to contact the responsible packaging activity to ascertain packaging requirements. Packaging requirements are maintained by the Inventory Control Point's packaging activities within the Military Service or Defense Agency, or within the military service's system commands. Packaging data retrieval is available from the managing Military Department's or Defense Agency's automated packaging files, CD-ROM products, or by contacting the responsible packaging activity.

6. NOTES

(This section contains information of a general or explanatory nature that may be helpful, but is not mandatory.)

6.1 Intended use. Relays conforming to this specification are intended for use in electronic and communication equipment. Their principal areas of application are for aircraft, missiles, spacecraft and ground-support electronic and communication equipment. This does not preclude the use of these relays in other military applications. Relays covered by this specification are typically intended to be able to operate satisfactorily in military systems under the following demanding conditions operating temperature range of -65°C to +125°C; penetration from cutting sand and dust conditions; and corrosion in salt water environments. These requirements are verified under a qualification system.

CAUTION: The use of any coil voltage less than the rated coil voltage will compromise the operation of the relay.

CAUTION: Transfer relay contacts are not to be used to ground load in one position and to 115-volt terminal in other position. Transfer relay contacts are not to be used to transfer load between phases, nor between unsynchronized ac sources.

CAUTION: When latching relays are installed in equipment, the latch and reset coils should not be pulsed simultaneously. Coils should not be pulsed with less than the rated coil voltage and the pulse width should be a minimum of three times the specified operate time of the relay. If these conditions are not followed, it is possible for the relay to be in the magnetically neutral position.

6.1.1 Contact rating. The contact ratings of relays covered by this specification are based on load endurance tests which establish the relay capability to switch rated loads. For the purposes of this specification, contact load ratings are defined as follows:

a. Low level: 10 μA at 50 mV to 10 mA at 6 V.

b. Intermediate: 10 mA at 6 V to 100 mA at 28 V.

c. High level: Above 100 mA at 28 V.

6.2 Acquisition requirements. Acquisition documents must specify the following:

a. Title, number, and date of the specification.

b. Issue of DoDISS to be cited in the solicitation, and if required, the specific issue of individual documents referenced (see 2.1).

c. Packaging requirements (see 5.1).

d. Title, number, and date of the applicable specification sheet, and the PIN.

e. Levels of preservation and packing required (see 5.1).

f. Marking requirements for FR level (see 1.3).

6.2.1 Manufacturer provided services. The manufacturer may provide the following optional value added services when specified in the purchase order:

a. Hot solder dipping of terminals (see 3.5.7).

b. Shortening of wire leads (see 3.5.7.2).

6.3 Qualification. With respect to products requiring qualification, awards will be made only for products which are, at the time of award of contract, qualified for inclusion in Qualified Products List QPL No. 32140 whether or not such products have actually been so listed by that date. The attention of the contractors is called to these requirements, and manufacturers are urged to arrange to have the products that they propose to offer to the Federal Government tested for qualification in order that they may be eligible to be awarded contracts or orders for the products covered by this specification. Information pertaining to qualification of products may be obtained from the Defense Supply Center Columbus (DSCC/VQP), Post Office Box 3990, Columbus, OH 43216-5000, or emailed to vqp.chief@dla.mil.

6.3.1 Qualification and maintenance by similarity. This information is for reference only. Refer to the individual specification sheets for detailed information.

6.3.1.1 Qualification by similarity. The qualification of products which are similar may be authorized for individual specification sheets within a style group for use in determining qualification inspection (reduced testing). Qualification by similarity is contingent upon qualifying activity approval.

6.3.1.2 Maintenance by similarity. The data accumulated for the style groups may be combined for group B and C inspections maintenance. Testing samples must be representative of production. Maintenance by similarity plan is contingent upon qualifying activity approval. Failures, regardless of the specific specification sheet affected, affect all other specification sheets within the respective style group.

6.4 Sealing. The following procedure is suggested as a guide; however, every effort should be made to utilize the most effective procedure consistent with the state of the art.

a. Evacuate to less than 200 microns.

b. Heat to maximum rated ambient temperature with continued evacuation (see 3.1).

c. Maintain heat and vacuum for 12 hours or longer, continuing the treatment until a maximum pressure of 80 microns is reached.

d. Turn off heaters and maintain pressure for 4 hours.

e. Close evacuation valve and fill chamber with the desired pressurizing gas.

f. Seal relay before removing from chamber.

6.5 Dissimilar metals. The finishing of metallic areas to be placed in intimate contact by assembly presents a special problem, since intermetallic contact of dissimilar metals results in electrolytic couples which promote corrosion through galvanic action. To provide the required corrosion protection, intermetallic couples are restricted to those permitted by MIL-STD-889, "Dissimilar Metals."

6.5.1 Tin plated finishes. Use of tin plating is prohibited. Use of tin finishes can result in tin whisker growth. Tin whisker growth can result in adverse effects on the operation of electronic equipment systems. For additional information on this matter, refer to ASTM B545-83, "Standard Specification for Electrodeposited Coating of Tin".

6.6 Fixturing losses. It is known that there is inherent resistance in sockets, wiring, etc.. The qualifying activity evaluates the manufacturer's system to determine conformance to specification requirements.

6.7 PIN. This specification requires a PIN that describes codification or classification and appropriate references to associated documents (see 1.2 and 3.1).

6.8 Typical RF test equipment.

a. Vector Network Analyzer or equivalent.

b. Coaxial cables, 50 ohms, with SMA connectors.

c. RF calibration standards, 50 ohms or as specified (see 3.1):

(1) Short.

(2) Load.

(3) Open.

(4) Thru.

d. RF test boards with SMA connectors: As many as needed.

e. 5/16 inch torque wrench set to 7 to 10 inch pounds.

f. Unless other impedance is specified (see 3.1), use 50 ohm SMA loads.

g. Unless other impedance is specified (see 3.1), use SMA connectors, as needed.

6.8.1 Typical RF connector care and cleaning.

a. All RF connectors should be inspected at least once a day for damage, and contamination with dirt, grease, or any other contaminants.

b. Damaged connectors are unacceptable for testing use and should be replaced.

c. Dirty connectors should not be used until cleaned and dry.

(1) Use only 99 and isopropyl alcohol or other approved cleaner that will not attack the connectors or cables and that will not leave a residue.

(2) Do not use wire brushes or any cleaning tools that are abrasive to the connectors.

(3) Allow all cleaned connectors to dry thoroughly before being used.

d. Torque all SMA connections to 7 to 10 inch-pounds.

6.9 Environmentally preferable material. Environmentally preferable materials should be used to the maximum extent possible to meet the requirements of this specification. Table VIII lists the Environmental Protection Agency (EPA) top seventeen hazardous materials targeted for major usage reduction. Use of these materials should be minimized or eliminated unless needed to meet the requirements specified herein (see Section 3).

TABLE VIII. EPA top seventeen hazardous materials.

Benzene	Dichloromethane	Tetrachloroethylene
Cadmium and compounds	Lead and compounds	Toluene
Carbon tetrachloride	Mercury and compounds	1,1,1 - Trichloroethane
Chloroform	Methyl ethyl ketone	Trichloroethyene
Chromium and compounds	Methyl isobutyl ketone	Xylenes
Cyanide and compounds	Nickel and compounds	

6.10 Glossary. The definitions listed below are not a complete glossary of relay terminology, but rather are intended as definitions of the technical terms as applied within the specification.

Bifilar winding: Two or more windings with the wire of each winding alongside the other, matching turn for turn; may be either inductive or noninductive.

Bi-stable (latching) relay: A two-position relay whose contacts transfer only as a result of coil energization (depending on design) (of either a particular polarity, or of a particular coil), remain in that position with no coil energization, and transfer to the alternate position only as a result of coil energization (of either the opposite polarity, or of the other coil, respectively).

Bounce time: The interval between first make of the contact until the uncontrolled making and breaking of the contact ceases.

Calibration: The process of comparing an instrument or device with a standard to determine its accuracy.

Chatter, contact: The undesired opening of mating contacts resulting from uncompensated ac operation, or from external shock and vibration.

Coil: One or more windings on a common form.

Contacts: The current-carrying parts of a relay that open or close electrical circuits.

Contact, bifurcated: A forked or branched, contacting member so formed or arranged, as to provide dual contacting.

Contact, closed: A normally-closed contact with the relay released is a closed contact. A normally-open contact with the relay operated is a closed contact.

Contact, open: A normally-closed contact with the relay operated is an open contact. A normally-open contact with the relay released is an open contact.

Contact arrangement: The combination of contact forms that make up the entire relay switching structure.

Contact bounce: Intermittent opening of contacts after initial closure due to contact impact.

Contact force: The force exerted by a movable contact against a mating contact when the contacts are closed.

Contact gap: The distance between a pair of mating relay contacts when the contacts are open.

Contact weld: A contact failure due to fusing of closed contacts, resulting in their failure to open.

Cycle, relay: A relay cycle is defined as a relay pickup and dropout, (one opening and one closure of a set of contacts). Therefore, a cycle consists of two cycles.

Degassing: A process of thermally cleaning a relay (at elevated temperatures) to drive off harmful gasses. Degassing is usually performed using vacuum pumps.

Dropout value (voltage), specified: As the current or voltage on an operated relay is decreased, the value at or above which all relay contacts must restore to their unoperated positions.

Hermetically sealed relay: A relay contained within an enclosure that is sealed by fusion to insure a low rate of gas leakage. This usually refers to metal-to-metal, or metal-to-glass sealing.

Hold value (voltage), specified: As the current or voltage on an operated relay is decreased, the value which must be reached before any contact change occurs.

Insertion loss: Insertion loss is the forward transmission loss of a device, consisting of resistive heating losses, dielectric losses, radiation losses, and losses due to mechanical mismatches. It is measured in decibels (dB).

Isolation: Isolation is the transmission loss of a device, consisting primarily of capacitive coupling between open contacts and other structural member. It is expressed in decibels (dB).

Miss: Failure to establish the intended circuit conditions (high or low output resistance, as applicable).

Normally closed contacts: Those contacts that are closed with the relay de-energized.

Normally open contacts: Those contacts that are open with the relay de-energized.

Operate time: The interval between the application of a step function input signal and closing of all normally open contacts. Bounce time is not included.

Operation, relay: A relay operation is defined as when a relay changes from an initial condition to the prescribed condition. For example, normally open to closed or vice versa. Therefore, a relay operation is one half of a cycle.

Pickup value (voltage), specified: As the current or voltage on an unoperated relay is increased, the value (voltage) at or below which all contacts must function.

Polarized relay: A relay, the operation of which is primarily dependent upon the direction (polarity) of the energizing current(s) and the resultant magnetic flux. The opposite of neutral relay. Also called "Polar Relay".

Relay: Most simply defined as an electrically controlled device that opens and closes electrical contacts to effect the operation of other devices in the same or another electrical circuit.

Relay, differential: A double input relay which is actuated by the polar signal resulting from the algebraic addition of dual inputs.

Relay, null-seeking: A relay of double-throw configuration and a stable center-off position. Either side of the double-throw contact can be activated by and for the duration of the polar actuating signal.

Relay, sensitive: A relay that operates on low input power commonly defined as 100 milliwatts or less.

Release time: The interval between the trailing edge of a step function input signal and closing of all normally closed contacts. Bounce time is not included.

Saturation: The condition attained in a magnetic material when an increase in magnetizing (coil) current produces no appreciable increase in flux.

Silicone: Any of a group of semi-inorganic polymers based on the structural unit R_2 SiO, where R is an organic group, characterized by wide range thermal stability, high lubricity, extreme water repellence, and physicochemical inertness, used in adhesives, lubricants, protective coatings, paints, electrical insulation, synthetic rubber, and prosthetic replacements for bodily parts.

Sensitivity: Pickup value expressed in terms of milliwatts (or watts).

Time, contact bounce: The time interval from initial closure of a contact to the end of bounce during pickup and dropout.

Time, operate: The time interval from coil energization to initial closure of the last open contact. Unless otherwise stated, it does not include contact bounce time.

Time, release: The time interval from coil de-energization to initial closure of the last open contact. Unless otherwise stated, it does not include bounce time.

Time, transfer: The time interval between the opening of the closed contact and the closing of the open contact of a break-make-contact combination. For multipole relays, transfer time is defined as the interval between the opening of the last closed contact and the closing of the first open contact of any set.

Voltage, rated coil: The coil voltage at which the relay is to operate and meet all specified electrical, mechanical and environmental requirements.

VSWR (Voltage Standing Wave Ratio): Forward/reverse reflection coefficient: VSWR is a measure of how much of the intended output signal of a device is reflected back to the source. A standing wave is the combination of the desired and reflected wave. It is the ratio of the maximum voltage on the signal path to the minimum voltage on the signal path. The unit is dimensionless, and can be expressed as either a number (e.g.: 1.2) or a ratio (e.g.: 1.2:1).

6.11 Subject term (keyword) listing.

Communication
Electronic
Exponential
Failure
Hermetically sealed
Latching
Low level
Non-hermetic
Non-latching
Power
Switching
Volt
Watt
Weibull

APPENDIX A

QUALIFICATION USING THE WEIBULL METHOD

A.1 SCOPE

A.1.1. Scope. This appendix provides the computation for the device failure rate and provides acceptable limits for the correlation coefficient and distribution slope using Weibull methods. This appendix is a mandatory part of the specification. The information contained herein is intended for compliance.

A.2 Weibull qualification method. Weibull qualification is subject to the following details:

a. Procedure I - Qualification. Using the Weibull method upon the qualification life data obtained from the samples cycled until failure as specified in the Qualification inspection table (see table II). The manufacturer may initially qualify their product to any of the FR levels shown in table I and associated load life rating (see A.2.1).

b. Procedure II - Extension of qualification to lower FR levels. To extend qualification to a lower FR level (see table I), data from two or more styles of similar construction may be combined.

c. Procedure III - Maintenance of FR level qualification. The sampling plan specified for group B inspection shall apply (see 4.7.3.1). The data from group B inspection life testing shall be accumulated along with prior qualification and group B life test data for each load rating. Weibull reliability analysis is performed upon the total accumulated life data for each load rating (see 4.8.18). In the event that the analysis no longer supports the FR level and associated number of cycles, the failure rate of the product shall be increased one level or the product removed from the QPL. Noncompliance corrective action shall be in accordance with 4.7.3.3.

A.2.1 Weibull FR level computation. For each rated contact load type, the sample units specified in group Q5 of table II shall be cycled until failure. If one unit fails within the first one-half percent (0.5%) of the rated life, it shall be considered an infant mortality. Another unit from the same lot shall be substituted in its place for life testing. If more than one unit is considered to be an infant mortality, refer to noncompliance corrective actions in accordance with 4.7.3.3. The failure points shall be plotted on commercially available Weibull paper or plotted using Weibull analysis software. From the plots, the distribution slope (β-Beta), the characteristic life (θ-Theta), and correlation (linearity) coefficient shall be determined. Data from periodic inspections shall be accumulated and added to the initial qualification data. The recomputed values of Theta, Beta, and correlation coefficient must support the qualification distribution model as specified herein. For each specified life rating, the average FR may be calculated using the equation shown in figure A-1. For qualification, the FR shall be calculated using the 95 percent confidence limit values for Beta and Theta. For qualification and maintenance of qualification, the correlation (linearity) coefficient shall be 0.8 minimum, and the distribution slope (Beta) must be 1.5 minimum. In the event that the periodic inspection data does not support the qualification distribution model, (Beta < 1.5, correlation coefficient < 0.8, decreased Theta) the failure rate of the product shall be increased one level or the product removed from the Qualified Products List. Noncompliance corrective action shall be in accordance with 4.7.3.3.

Weibull analysis example:

A manufacturer wants to rate their relay for 5,000,000 cycles with a 1 percent failure rate. Therefore, twenty randomly selected relays are tested as required (see table II). Table A-I illustrates the time to failure for each of the twenty units under test, listed in order from lowest to highest failure time. Also, it is necessary to estimate the percentage of relays failing before each failure cycle (median ranks) (see table A-I). In addition, table A-I provides ln(Design A Cycles to Failure) and ln(ln(1/(1-Cumulative Probability))) which may be plotted on linear graph paper for a graphic solution instead of Weibull graph paper.

TABLE A-I. Ranked times to failure.

Sample number	Rank order (i)	X = (Cycles to failure age in million cycles)	Y (Median rank in %) $= \frac{(\text{Rank Order} - 0.3)}{(20 + 0.3)}$	X-coordinate = ln(Design A Cycles to Failure)	Y-coordinate = ln(ln(1/(1-Cumulative Probability)))
5	1	12.23	3.431	1.04	2.504
18	2	13.51	8.333	1.09	2.603
9	3	13.76	13.235	1.15	2.640
10	4	14.01	18.137	1.22	2.696
16	5	14.46	23.039	1.30	2.745
3	6	14.82	27.941	1.39	2.822
4	7	15.34	32.843	1.49	2.870
11	8	15.56	37.745	1.61	3.019
1	9	16.35	42.647	1.74	2.794
14	10	16.81	47.549	1.91	2.822
15	11	17.09	52.451	2.10	2.838
2	12	17.64	57.353	2.34	2.870
20	13	19.35	62.255	2.65	2.963
8	14	20.47	67.157	3.04	3.019
17	15	21.64	72.059	3.58	3.075
6	16	23.19	76.961	4.34	3.144
13	17	23.89	81.863	5.51	3.173
12	18	24.34	86.765	7.56	3.192
19	19	25.26	91.667	12.00	3.229
7	20	25.87	96.569	29.14	3.253

The first item to examine is if there is if the correlation coefficient 0.8. This is to determine if the test information indicates there is a trend in the number of failures as compared to the number of cycles the relay has been operated.

Utilizing the correlation function:

$$\text{Correlation coefficient} = r = \frac{\sum XY - \frac{\sum X \sum Y}{N}}{\sqrt{\left(\sum X^2 - \frac{(\sum X)^2}{N}\right)\left(\sum Y^2 - \frac{(\sum Y)^2}{N}\right)}}$$

$$= \frac{-27.108 - \frac{58.272 * (-10.889)}{20}}{\sqrt{\left(170.697 - \frac{(58.272)^2}{20}\right)\left(32.018 - \frac{(-10.889)^2}{20}\right)}}$$

$$= \frac{-27.108 - (-31.726)}{\sqrt{(170.697 - 169.781)(32.018 - 5.929)}} = \frac{4.621}{4.889} = 0.945$$

With the correlation factor being 0.945, it can be concluded there is a definite correlation between failures and number of cycles.

Next, the cycles to failure versus median ranks shall be plotted (in percent on Weibull graph paper using the x-y coordinates or linear graph paper using ln(ln(1/(1-Cumulative Probability)))) and ln(Cycles to failure). See table A-I and figure A-1 for an example. The resultant linear graph is illustrated in figure A-I. As shown in the figure, a best fit through the data points shall be drawn. The slope of the line, β, and the characteristic life, θ shall be estimated.

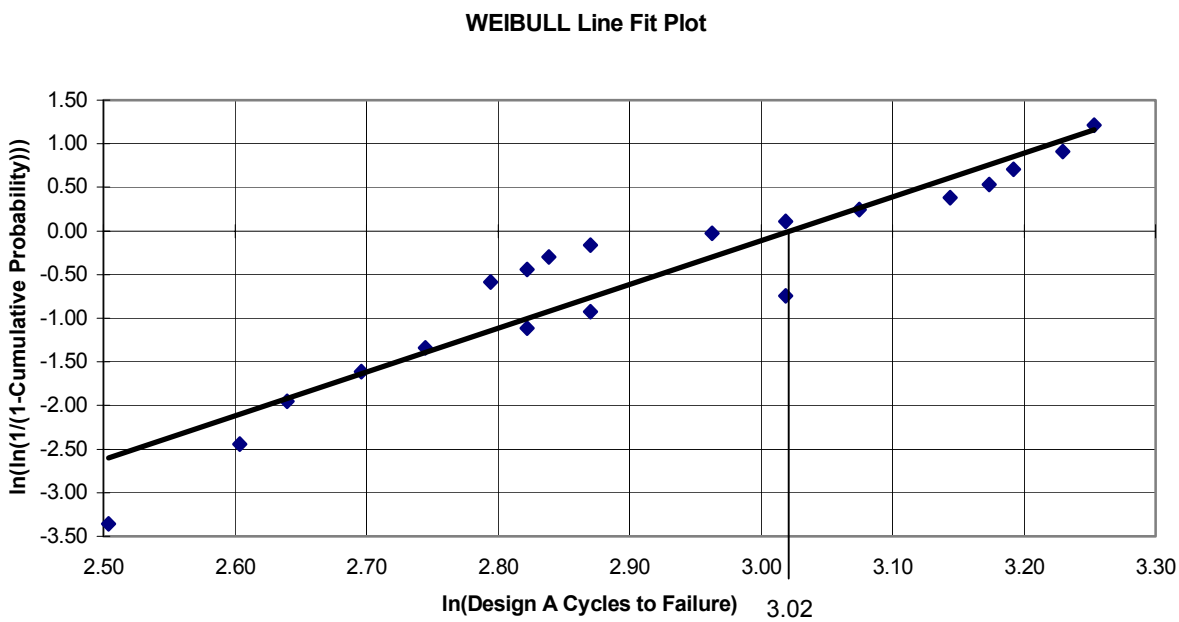

Figure A-1: Weibull FR Level Computation

The calculation of β is given by the equation: $\beta = \text{SLOPE} = \frac{\Delta Y}{\Delta X}$

Where: $\Delta X = \ln t_2 - \ln t_1 = X_2 - X_1$

$$\Delta Y = \ln \ln\left(\frac{1}{1 - F(t_2)}\right) - \ln \ln\left(\frac{1}{1 - F(t_1)}\right) = Y_2 - Y_1$$

From the chart,

$$\Delta X = 3.02 - 2.60 = 0.42$$

$$\Delta Y = 0.00 - (-2.12) = 2.12$$

Therefore,

$$\beta = \frac{2.12}{0.42} = 5.04$$

The characteristic life (Theta) is estimated from the graph at the intercept of the linear trend line and the 63.2 percent Cumulative Distribution Function (CDF) value or where Y=0. In the example, the ln(design A cycles to failure) would approximate the CDF value by dropping a vertical line to the x-axis. In the example, the characteristic life of the product is ln 3.02 or 20.49 million cycles.

$$FR_{\%} = \left[1 - e^{-\left(\frac{T}{\theta}\right)^{\beta}} = 1 - e^{-\left(\frac{5.00}{20.49}\right)^{5.04}}\right] * 100\% = [1 - 0.9992] * 100\% = 0.08\%$$

Where:

β = Distribution slope (Beta)
θ = Characteristic life (Theta)
T = Rated life

For the purposes of qualification and maintenance of qualification, the average failure rate during rated life shall be determined with a 95 percent confidence level according to MIL-STD-690. The failure rate for the confidence levels are calculated below:

$$FR_{@95\% \text{ confidence level}} = FR\% * \text{Confidence Level coefficient} = 0.08\% * 3.0 = 0.24\%$$

Therefore, in the example the relay would be qualified to level B.

Custodians:
Army - CR
Navy - EC
Air Force - 11
NASA - NA
DLA - CC

Review activities:
Army - AV, MI
Air Force - 99

Preparing activity:
DLA - CC

(Project 5945-1215)

NOTE: The activities listed above were interested in this document as of the date of this document. Since organizations and responsibilities can change, you should verify the currency of the information above using the ASSIST Online database at http://www.dodssp.daps.mil.