PERFORMANCE SPECIFICATION SHEET

CAPACITORS, FIXED, ELECTROLYTIC (NON-SOLID ELECTROLYTE), TANTALUM, (NON-POLARIZED, SINTERED SLUG) 85°C (VOLTAGE DERATED TO 125°C), ESTABLISHED RELIABILITY, STYLE CLR82

This specification is approved for use by all Departments and Agencies of the Department of Defense.

The requirements for acquiring the product described herein shall consist of this specification and MIL-PRF-39006.

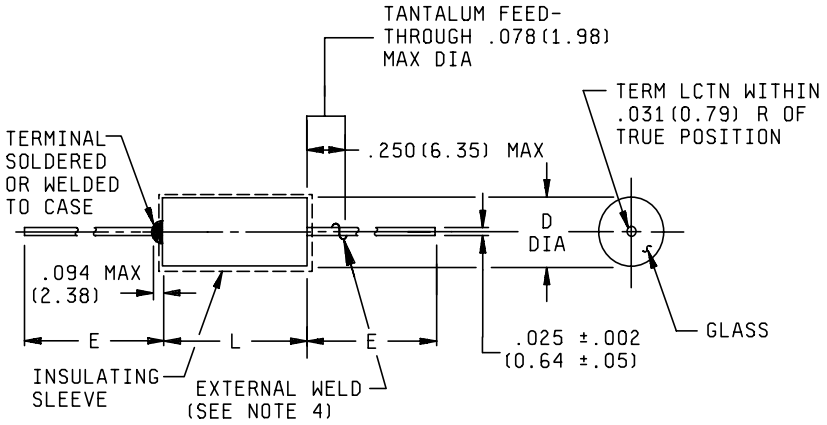

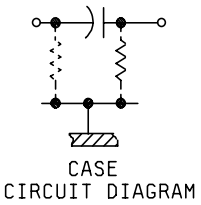

NOTES:
1. Dimensions are in inches.
2. Metric equivalents are in parentheses.
3. Metric equivalents are given for general information only.
4. The weld shall not be enclosed in the end seal.

FIGURE 1 Style CLR82 Capacitors

DISTRIBUTION STATEMENT A. Approved for public release; distribution is unlimited.

Case Size	Basic Case		Insulated Case	
	L 1/ + .031 (0.79) - .016 (0.41)	D ± .016 (0.41)	D max	E ± .250 (6.35)
T4	1.062 (26.97)	.375 (9.52)	.406 (10.31)	2.250 (57.15)

1/ Length of basic case; sleeving shall be as specified in MIL-PRF-39006.

FIGURE 1. Style CLR82 capacitors - Continued.

REQUIREMENTS

Design and construction: See figure 1.

Dimensions and configuration: See figure 1.

Case type: Tantalum, tubular, insulated.

Seal type: Hermetic.

Terminals: Axial-wire lead: (type N32, N51, or N52 of MIL-STD-1276).

Rated temperature: -55°C to +85°C, voltage derated to +125°C (see figure 2).

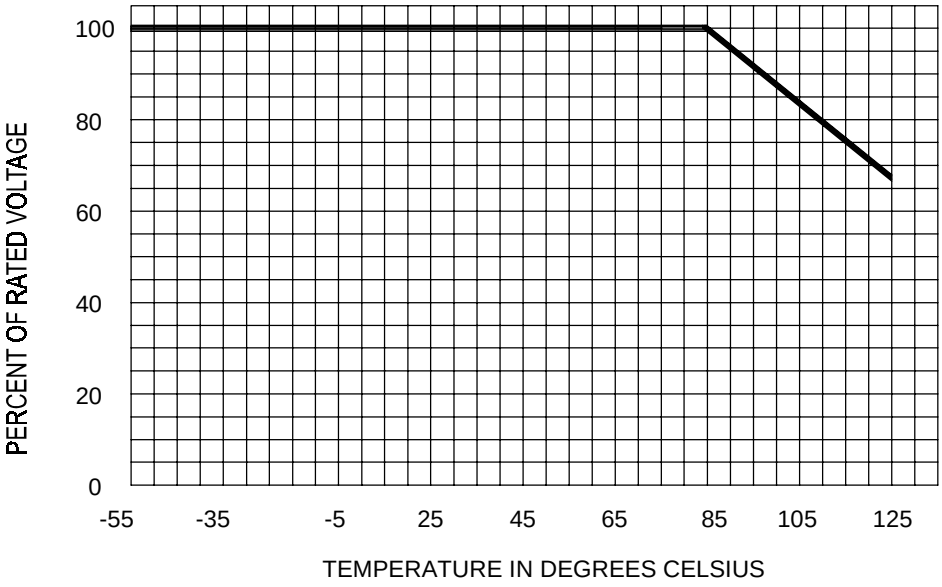

FIGURE 2. Voltage derating with temperature.

TABLE 1. Capacitor Characteristics.

Rated voltage (+85°C)	Cap	Cap tolerance	DC Leakage (max)		Dissipation factor (max)	Derated voltage (+125°C)	Surge voltage (+85°C)	Impedance (max)	Capacitance Change at			Case size	PIN M39006/32 Failure Rate Level (%/1,000 hours) 1/			
			+25°C	+85°C and +125°C					-55°C	+85°C	+125°C		M (1.0)	P (0.1)	R (0.01)	S (0.001)
V dc	uF	%	uA	uA	%	V dc	V dc	ohms	%	%	%					
6	410	±20	7	28	56.0	4	6.9	14	-76	+26	+30	T4	0007-	0071-	0135-	0199-
6	410	±10	7	28	56.0	4	6.9	14	-76	+26	+30	T4	0008-	0072-	0136-	0200-
10	250	±20	7	28	33.0	6	11.5	20	-61	+16	+30	T4	0015-	0079-	0143-	0207-
10	250	±10	7	28	33.0	6	11.5	20	-61	+16	+30	T4	0016-	0080-	0144-	0208-
15	180	±20	8	32	22.5	10	17.2	26	-53	+12	+30	T4	0023-	0087-	0151-	0215-
15	180	±10	8	32	22.5	10	17.2	26	-53	+12	+30	T4	0024-	0088-	0152-	0216-
25	110	±20	9	36	13.5	15	28.8	39	-42	+8	+30	T4	0031-	0095-	0159-	0223-
25	110	±10	9	36	13.5	15	28.8	39	-42	+8	+30	T4	0032-	0096-	0160-	0224-
30	90	±20	9	36	11.1	20	34.5	45	-38	+7	+30	T4	0039-	0103-	0167-	0231-
30	90	±10	9	36	11.1	20	34.5	45	-38	+7	+30	T4	0040-	0104-	0168-	0232-
50	50	±20	10	40	6.3	30	57.5	69	-30	+7	+30	T4	0047-	0111-	0175-	0239-
50	50	±10	10	40	6.3	30	57.5	69	-30	+7	+30	T4	0048-	0112-	0176-	0240-
75	35	±20	11	44	4.7	50	86.2	89	-25	+5	+30	T4	0055-	0119-	0183-	0247-
75	35	±10	11	44	4.7	50	86.2	89	-25	+5	+30	T4	0056-	0120-	0184-	0248-
100	25	±20	12	48	3.5	65	115.0	113	-22	+4	+30	T4	0063-	0127-	0191-	0255-
100	25	±10	12	48	3.5	65	115.0	113	-22	+4	+30	T4	0064-	0128-	0192-	0256-

1/ Dash number shall include the letter “H” to indicate the optional vibration and shock requirements (i.e. 51 g’s random vibration, 80 g’s sinusoidal vibration, and 500 g’s shock) or the “-“ will be deleted.

Rated voltage: See table I.

Capacitance (Cap) (nominal): See table I.

Cap tolerance: ±10 percent or ±20 percent (see table I).

FR level: See table I.

Constant voltage conditioning: As specified in MIL-PRF-39006.

DC leakage (DCL) (max) (at +25°C): See table I.

Cap (nominal): Method 305 of MIL-STD-202.

Dissipation factor (DF) (max): See table I.

Seal: Method 112 of MIL-STD-202, conditions A or D, and C.

Shock (specified pulse): Method 213 of MIL-STD-202, condition I (100 g's) or condition D (500 g's) as applicable.

Vibration, high frequency: Method 204 of MIL-STD-202, condition D (20 g's) or condition H (80 g's) as applicable.

Random vibration (when applicable): Method 214 of MIL-STD-202, test conditon II-K (51 g's).

Thermal shock: Method 107 of MIL-STD-202, condition A (with step 3 at +125°C).

Number of cycles: 300 for qualification and group C; 30 for group B.

DCL: 200 percent (max) of 25°C value of table I for qualification and group C.

DCL: 125 percent (max) of +25°C value of table I for group B.

ΔCap: within ±5 percent of initial measurement.

DF: 115 percent (max) of initial requirement.

Salt spray (corrosion): Method 101 of MIL-STD-202, condition B (48 hours).

Solderability: Method 208 of MIL-STD-202.

Terminal strength:

Pull: Method 211 of MIL-STD-202, condition A.

Wire-lead bend: In accordance with MIL-PRF-39006.

Surge voltage: See table I.

Moisture resistance: Method 106 of MIL-STD-202.

DCL: 125 percent (max) of 25°C of table I.

ΔCap: Within ±8 percent of initial measurement.

DF: 115 percent (max) of initial requirement.

Dielectric withstanding voltage (DWV): Method 301 of MIL-STD-202. 2,000 v dc, minimum.

Insulation resistance (IR): Method 302 of MIL-STD-202, condition B. 100 megohms, minimum.

Low temperature (storage): Method 502 of MIL-STD-810.

DCL: See table I.

ΔCap: Within ±5 percent of initial measurement.

DF: See table I.

Stability at low and high temperatures:

Step 1 (+25°C):

DCL: See table I.

ΔCap: Within tolerance of table I value.

DF: See table I.

Step 2 (-55°C):

Impedance: See table I.

ΔCap: See table I..

Step 3 (+25°C):

DCL: See table I.

ΔCap: Within ±5 percent of step 1 value.

DF: See table I.

Step 4 (+85°C):

DCL: See table I.

ΔCap: See table I.

DF: See table I.

Step 5 (+125°C):

DCL: See table I.

ΔCap: See table I.

DF: See table I.

Step 6: (+25°C):

DCL: See table I.

ΔCap: Within ±5 percent of step 1 value.

DF: See table I.

Reverse voltage: Not applicable.

Life at 85°C: Method 108 of MIL-STD-202.

2,000 hours (qualification):

DCL: See table I.

ΔCap: Within ±10 percent of initial measurement

DF: See table I.

10,000 hours (group B) and extended life.

DCL (85°C): 125 percent (max) of table I value.

DCL (25°C): See table I.

ΔCap: Within +10 percent, -20 percent of initial measurement.

DF: 200 percent (max) of table I value.

DWV: 2,000 V dc, minimum.

IR: 100 megohms, minimum.

Life at 125°C: Method 108 of MIL-STD-202.

DCL: See table I.

ΔCap: Within ±10 percent of initial measurement.

DF: See table I.

DWV: 2,000 V dc, minimum.

IR: 100 megohms, minimum.

2,000 hours (group C):

DCL (125°C): 125 percent (max) of table I value.

DCL (25°C): See table I.

ΔCap: Within +10 percent, -20 percent of initial measurement.

DF: 200 percent (max) of table I value.

DWV: 2,000 V dc, minimum.

IR: 100 megohms, minimum.

Barometric pressure: Method 105 of MIL-STD-202, condition E (150,000 feet) (45,720.1 m).

Test voltage: Rated voltage.

Resistance to soldering heat: Method 210 of MIL-STD-202, condition B.

DCL: see table I.

ΔCap: Within ±5 percent of initial measurement.

DF: See table I.

Marking: In accordance with MIL-PRF-39006.

Voltage groups (85°C rated voltage):

I ..... 6V through 15V

II ..... 25V through 50V.

III ..... 75 through 100V.

Custodians:
Army - CR
Navy - EC
Air Force - 85
NASA - NA

Review activities:
Army - AR
Navy - AS, MC, OS
Air Force - 17, 19, 99

Preparing activity:
Navy - EC

Agent:
DLA-CC

(Project 5910-1952)