INCH-POUND

NOTE: The document identifier and heading has been changed on this page to reflect that this is a performance specification. There are no other changes to this document. The document identifier on subsequent pages has not been changed, but will be changed the next time this document is revised.

MIL-PRF-39012/1G
26 September 1994
SUPERSEDING
MIL-C-39012/1F
14 December 1987

PERFORMANCE SPECIFICATION SHEET

CONNECTORS, PLUG, ELECTRICAL, COAXIAL, RADIO FREQUENCY, (SERIES N (CABLED), PIN CONTACT, CLASS 2)

This specification is approved for use by all Departments and Agencies of the Department of Defense.

The requirements for acquiring the product described herein shall consist of this specification sheet and the issue of the following specification listed in that issue of the Department of Defense Index of Specifications and Standards (DODISS) specified in the solicitation: MIL-PRF-39012.

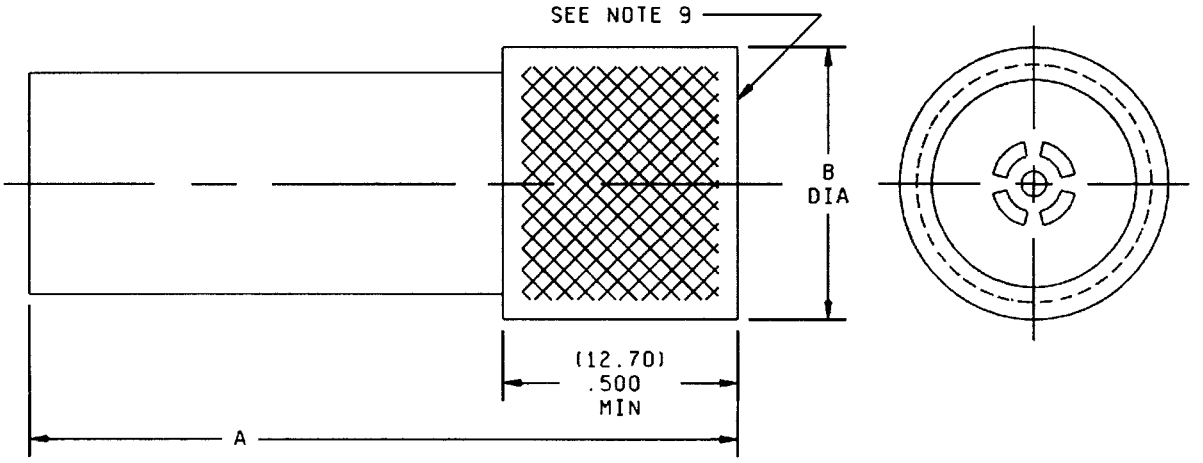

..

NOTES:
1. Dimensions are in inches.
2. Metric equivalents are given for information only.
3. Metric equivalents are in parentheses.
4. For dimensions A and B, see tables I and III.
5. Dimensions A and B are the largest overall dimensions of the connector.
6. Wrench flats are to accommodate standard wrench opening in accordance with FED-STD-H28, appendix 10.
7. All undimensioned pictorial representations are for reference purposes only.
8. Dimension A defines the maximum length of the connector when assembled to the appropriate cable.
9. Series N, pin contact interface, in accordance with MIL-STD-348, 304.1.

FIGURE 1. General configuration.

DISTRIBUTION STATEMENT A. Approved for public release; distribution is unlimited.

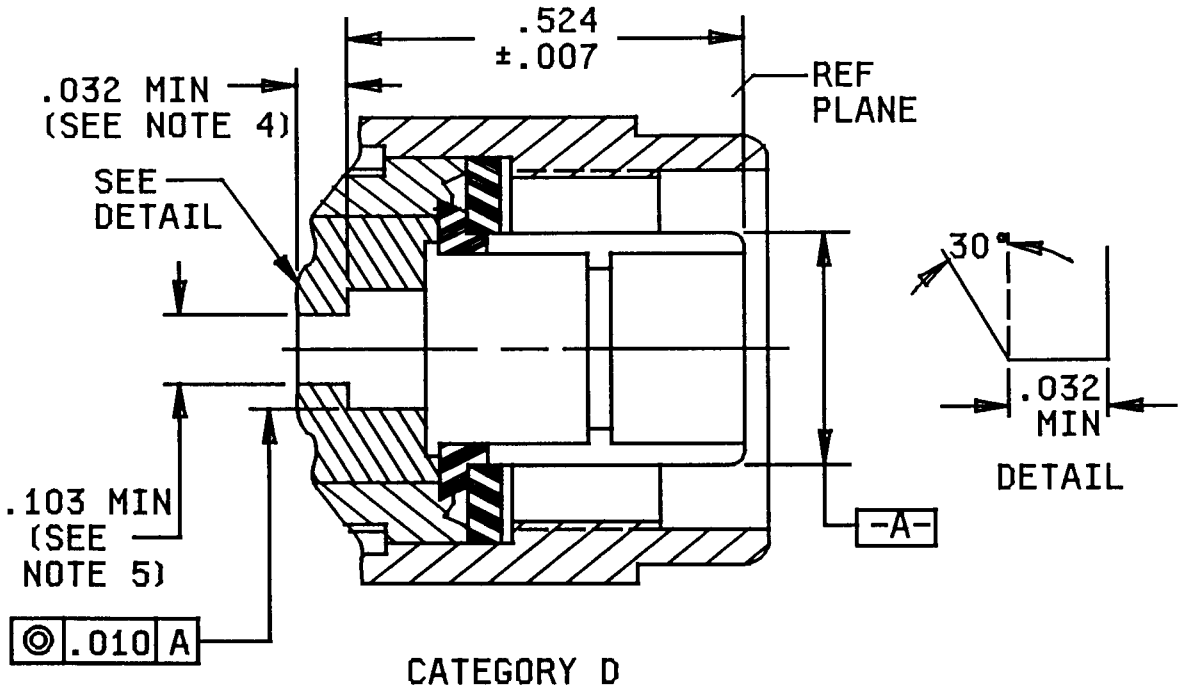

Inches	mm
.007	0.18
.010	0.25
.032	0.81
.103	2.62
.524	13.31

NOTES:
1. Dimensions are in inches.
2. Three holes .027 (0.69 mm) minimum diameter, equally spaced, are required for safety wiring after mating. Location on coupling nut optional.
3. Metric equivalents are given for general information only.
4. Chamfer is optional, if chamfer is used put chamfer on a 30° maximum.
5. Dimension shall meet connector performance requirements.

FIGURE 2. Mating dimensions for socket terminations.

TABLE I. Dash numbers, cross-reference, and dimensions.

Dash number 1/	Applicable cable M17/ 2/	Dimensions	Inches (millimeters) maximum
Category A - Field serviceable (no special tools required) 3/			
0101 Cable group VIII	2-RG006 4/ 73-RG212 162-00001 180-00001 4/ 188-00001 199-00001 112-RG304 5/ 171-00001	A B	1.875(47.63) .827(21.01)
0104 Cable group XIV	79-RG218 5/ 166-00001 193-00001	A B	2.500(63.50) 1.343(34.11)
0005 Cable group X	6-RG11 4/ 181-00001 4/ 62-RG144 4/ 65-RG165 159-00001 74-RG213 189-00001 163-00001 75-RG214 190-00001 164-00001 86-00001 6/ 127-RG393 5/ 174-00001 77-RG216 4/ 191-00001 4/	A B	1.875(47.63) .827(21.01)
0015 Cable group XII	78-RG217 5/	A B	1.875(47.63) .906(23.07)
0125 Cable group XI	74-RG215 5/ 7/ 189-00002 7/	A B	2.500(63.50) .827(21.01)
Category C - Field replaceable (MIL-C-22520 crimp tool) See footnote next to applicable cable for crimp die 3/ 8/			
0016 (Superseding -0027 13/) Cable group VIII	73-RG212 9/ 162-00001 9/ 2-RG006 4/ 9/ 180-00001 4/ 9/ 188-00001 9/ 199-00001 9/ 112-RG304 5/ 9/ 171-00001 9/	A B	2.000(63.50) .827(21.01)
0017 (Superseding -0021 13/) Cable group XA	74-RG213 10/ 65-RG165 5/ 6/ 10/ 159-00001 10/ 189-00001 10/ 163-00001 10/		
0018 (Superseding -0022 13/) Cable group XB	75-RG214 10/ 190-00001 10/ 174-00001 10/ 164-00001 10/ 86-00001 6/ 10/ 127-RG393 5/ 10/		
0023 Cable group XC	6-RG11 4/ 10/ 181-00001 4/ 10/ 62-RG144 4/ 5/ 6/ 10/		
0024 Cable group XD	77-RG216 4/ 5/ 6/ 10/ 191-00001 4/ 10/		

See footnotes at end of table.

TABLE I. Dash numbers, cross-reference, and dimensions - Continued.

Dash number 1/	Applicable cable M17/ 2/	Dimensions	Inches (millimeters) maximum
Category D - Field replaceable - Defined piece part 3/ 8/ 11/ 12/			
0501 Cable group XB	75-RG214 190-00001 174-00001 164-00001 86-00001 127-RG393 5/	A B	1.593(40.48) .827(21.01)
0502 Cable group XA	74-RG213 65-RG165 5/ 159-00001 189-00001 163-00001		
0503 Cable group VIB	60-RG142 6/ 158-00001 84-RG223 167-00001 194-00001 200-00001 128-RG400 5/ 175-00001	A B	1.516(38.50) .827(21.01)
0504 Cable group VIA	28-RG058 155-00001 183-00001 197-00001 111-RG303 5/ 170-00001		

1/ For cross-reference of dash number to superseded part number or type designation, see table IV.

2/ The latest version of each cable shall be applicable.

3/ These connectors have captivated center contacts.

4/ These are not 50 ohm cables; therefore, when attached to the specified connectors, VSWR, RF leakage and insertion loss are not applicable.

5/ Cable to be used when performing tests requiring cable except as in 4/ and 6/.

6/ Cable to be used for the +200°C temperature cycling tests.

7/ Armored cable.

8/ These connectors are assembled using the applicable crimp tool, to the specified cables stripped as shown on figure 4.

9/ M22520/5-35 closure A or M22520/5-55 closure A.

10/ M22520/5-61.

11/ Complete connector assembly shall consist of a body, center contact, ferrule and assembly instructions.

12/ Not to be used in army equipment.

13/ The superseding dash numbers are acceptable for government use until stock is purged or 3 years from the date of this specification which ever is earlier.

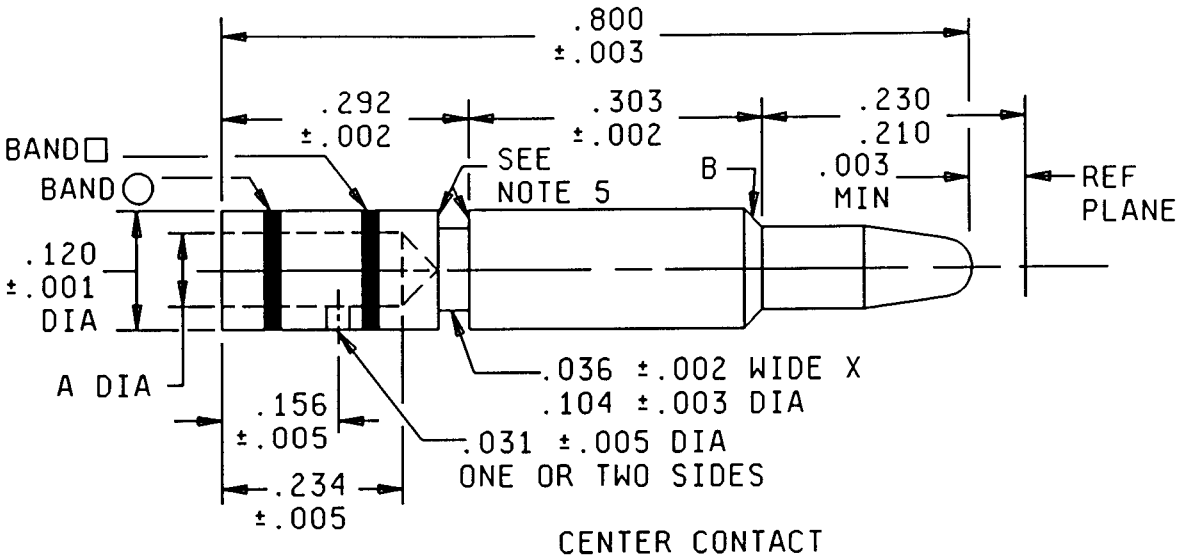

Inches	mm	Inches	mm
.001	0.03	.210	5.33
.002	0.05	.220	5.59
.003	0.08	.230	5.84
.005	0.13	.234	5.94
.008	0.20	.245	6.22
.015	0.38	.250	6.35
.031	0.79	.292	7.42
.036	0.91	.303	7.70
.043	1.09	.418	10.62
.098	2.49	.438	11.13
.104	2.64	.492	12.50
.120	3.05	.500	12.70
.156	3.96	.600	15.24
.206	5.23	.800	20.32

Dash number	Contact number 1/	A	B	Basic crimp tool 2/	Crimp die or positioner	Crimp tensile minimum	Color band □	Color band ○
0501 0502	1-10	.098 ±.002	.008 ±.002 x 30° ±5°	M22520/1-01 3/	M22520/1-13 3/	60 lbs	Red	Black
0503 0504	1-11	.043 +.001 -.002		M22520/5-01	M22520/5-25 Closure B	20 lbs	Blue	

1/ Contact numbers are for identification only.
2/ Class 2 tool may be used by OEM (see MIL-C-22520).
3/ Optional tool: M22520/5-01 with M22520/5-25 closure B die.

FIGURE 3. Contact and ferrule dimensions for category D only.

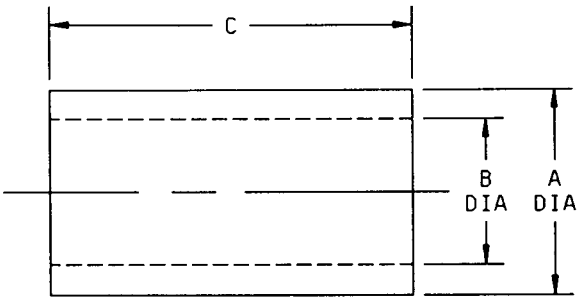

CRIMP FERRULE

Dash no.	Ferrule no. 1/	A	B	C	Basic crimp tool 2/ M22520/5	Crimp die or positioner M22520/5-
0501	1-50	.492 ±.003	.438 ±.003	.600 ±.015	-01	61 or 25 Closure A
0502	1-51		.418 ±.003			
0503	1-52	.250 ±.003	.220 ±.003	.500 ±.015		05, 11, 57 Closure A or 19 Closure B
0504	1-53	.245 ±.003	.206 ±.003			

1/ Ferrule numbers are for identification only.
2/ Class 2 tools may be used by OEM (see MIL-C-22520).

NOTES:
1. Dimensions are in inches.
2. Metric equivalent are given for information only.
3. Crimp tensile test shall be in accordance with MIL-C-39029.
4. Copyright notice: All information disclosed in these specification sheets which is or may be copyrighted is reproduced herein with the express permission of the copyright owner.
5. Maximum break = .003 (0.08 mm).
6. Color bands shall be positioned so that no coloring material enters the inspection hole.

FIGURE 3. Contact and ferrule dimensions for category D only - Continued.

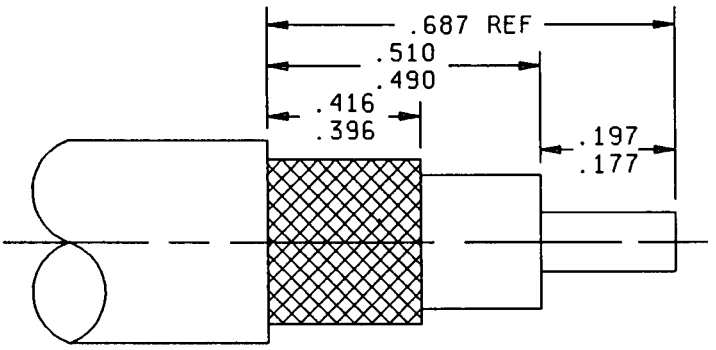

Inches	mm
.177	4.50
.197	5.00
.396	10.06
.416	10.57
.490	12.45
.510	12.95
.687	17.45

NOTES:
1. Dimensions are in inches.
2. Metric equivalents are given for information only.

FIGURE 4. Cable stripping dimensions for field replaceable connectors.

ENGINEERING DATA:

Nominal impedance: 50 ohms.

Frequency range: 0 to 11,000 MHz.

Voltage rating:

1,000 volts rms maximum working voltage at sea level.

250 volts rms maximum at 70,000 feet.

Temperature rating: -65°C to +165°C.

REQUIREMENTS:

Design and configuration: See figure 1.

Force to engage and disengage:

Longitudinal force: Not applicable.

Torque: 6 inch-pounds maximum.

Coupling proof torque: 15 inch-pounds minimum.

Inspection conditions: Coupling torque: 6 to 10 inch-pounds.

Mating characteristics: See figure 2 and MIL-STD-348 for dimensions.

Outer contact:

Test ring ID: .316 maximum, 16 microinch finish.

Insertion force: 25 pounds maximum when inserted a minimum of .093.

Contacts with slotted members: Shall contact a .324 minimum diameter ring within .031 of their tip ends.

Hermetic seal: Not applicable.

Leakage (pressurized connectors): Not applicable.

Insulation resistance: Method 302 of MIL-STD-202, test condition B. 5,000 megohms minimum.

Center contact retention: (Applicable to captivated-center-contact connectors only.) 15 pounds minimum axial force for all cables except RG400 and RG142; 6 pounds minimum for RG400 and RG142.

Corrosion (salt spray): Method 101 of MIL-STD-202, test condition B.

Voltage standing wave ratio (VSWR): From 500 to 11,000 MHz, or approximately 80 percent of upper cutoff frequency of the cable, whichever is lower; 1.30 maximum (1.45 maximum at 11 GHz for -0503 and -0504).

Swept frequency VSWR test setup:

Item 6: VSWR shall be less than 1.008 +.002 F (F in GHz).

Item 16: VSWR shall be less than 1.008 +.002 F (F in GHz).

Second step of VSWR checkout procedure: VSWR shall be less than 1.012 +.004 F (F in GHz).

Group B inspection: VSWR shall be less than 1.024 +.007 F (F in GHz).

Qualification and group C inspection - VSWR shall not exceed 1.08.

Connector durability: 500 cycles minimum at 12 cycles/minute maximum. The connector shall meet the mating characteristics and force to engage and disengage requirements.

Contact resistance: In milliohms maximum.

	Initial	After environment
Center contact	1.0	1.5
Outer contact	.2	Not applicable
Braid to body	.05	Not applicable

Dielectric withstanding voltage: Method 301 of MIL-STD-202. 2,500 volts rms minimum at sea level for connectors using other than RG400 and RG142; 1,500 volts rms minimum for connectors using RG400 and RG142.

Vibration, high frequency: Method 204 of MIL-STD-202, test condition B. No discontinuity permitted.

Shock: Method 213 of MIL-STD-202, test condition I. No discontinuity permitted.

Thermal shock: Method 107 of MIL-STD-202, test condition B, except test high temperature shall be +85°C. High temperature shall be +200°C for connectors using +200°C cables (see table I and III).

Moisture resistance: Method 106 of MIL-STD-202. No measurements at high humidity. Insulation resistance shall be at least 200 megohms within 5 minutes after removal from humidity.

Corona level:

Voltage: 500 volts rms minimum.

Altitude: 70,000 feet.

RF high potential withstanding voltage:

Voltage and frequency: 1,500 volts rms tested at a frequency from 5 to 7.5 MHz.

Leakage current: Not applicable.

Cable retention force:

Noncrimp assemblies: 75 pounds minimum.

Crimp assemblies:

50 lbs minimum for cables .155-.189 OD.

60 lbs minimum for cables .190-.229 OD.

75 lbs minimum for cables .230-.249 OD.

90 lbs minimum for cables .250 OD and larger.

Coupling mechanism retention force: 100 pounds minimum.

RF leakage: -90 dB minimum, tested at a frequency between 2 and 3 GHz.

Insertion loss: .15 dB maximum at 9 GHz.

Part or Identifying Number (PIN): M39012/01- (dash number from table I or "B" number from table III).

TABLE II. Group qualification. 1/

Group	Submission and qualification of any of the following connectors 2/ M39012/01	Qualifies the following connectors M39012/01
I	-0101 -0104 -0125	-0101 -0104 -0125
II	-0005 -0015	-0005 -0015
III	B0006 B0007 B0008 B0011 B0012	B0006 B0007 B0008 B0011 B0012
IV	-0016 -0017 -0018 -0021 -0022	B0006 B0007 B0008 B0011 B0012 B0013 B0014 -0016 -0017 -0018 -0021 -0022 -0023 -0024
V	B0013 B0014	B0013 B0014
VI	-0023 -0024 -0027	B0013 B0014 -0023 -0024 -0027
VII	B0026	B0026
VIII	-0501 -0502	-0501 -0502 -0503
IX	-0503	-0503
X	-0504	-0504

1/ If a connector manufacturer produces a connector which meets all the requirements for two or more connector PIN's (within the same series), the manufacturer may receive qualification approval for two or more connector PIN's by qualifying the one connector. It is not necessary that such connectors be in the same group. Each connector, however, must be marked with its own appropriate PIN. For group qualification, the connectors must be of similar design.

2/ For qualification retention, where more than one part is listed in a group in this column, data may be supplied on any of those parts in order to retain qualification for those parts in the corresponding right-hand column. The part does not necessarily have to be the part initially qualified.

TABLE III. CATEGORY B - NONFIELD REPLACEABLE (SPECIAL TOOLS MAY BE REQUIRED). 1/

NOT FOR ARMY, NAVY, OR AIR FORCE USE. FOR OEM USE ONLY

PIN 2/ M39012/01B	Applicable cable 3/ M17/	Dimensions	Inches (millimeters) maximum
0006 4/	73-RG212 5/ 162-00001	A B	2.000 (50.80) .827 (21.01)
0007 4/	74-RG213 5/		
0008 4/	75-RG214 5/		
0011 4/	65-RG165 5/ 6/		
0012 4/	86-00001		
0013 4/	6-RG11 7/ 62-RG144 5/ 6/ 7/		
0014 4/	77-RG216 5/ 7/		
0026 8/	2-RG6 6/ 7/		

1/ For maintenance replacements for category B, see table V.

2/ For cross-reference of dash number to superseded PIN or type designation, see table IV.

3/ The latest version of each cable shall be applicable.

4/ Inactive for new design.

5/ Cable to be used when performing tests requiring cable except as in 6/ and 7/.

6/ Cable to be used for the +200°C temperature cycling tests.

7/ These are not 50-ohm cables; therefore, when attached to the specified connectors, VSWR, RF leakage, and insertion loss are not applicable.

8/ These connectors have captivated center contacts.

TABLE IV. Cross-reference of PIN's. 1/

Preferred PIN M39012/01	Substitute for PIN or type designation
-0101	MS91231-18E, UG-18/U, M39012/01-0001
-0005	MS91236-21G. UG-21/U, M39012/01-0002
-0015	MS91238-204D, UG-204/U, M39012/01-0003
-0104	MS91239-167F, UG-167/U, M39012/01-0004
-0005	MS90534-1185A. UG-1185A/U
B0006	M39012/01-0010, UG-1680. UG-1684, M23329/2-01, M39012/01-0006, M23329/2-06
B0007	M23329/2-02, UG-1681, M39012/01-0007
B0008	M23329/2-03, UG-1682, M39012/01-0008
B0011	M23329/2-07, UG-1685, M39012/01-0011
B0012	M23329/2-08, UG-1695, M39012/01-0012
B0013	M23329/2-09, UG-1817, M39012/01-0013
B0014	UG-1817/U, M39012/01-0014
-0015	UG-1487A/U
-0016	M39012/0140020
-0017	
-0021	
-0022	
-0023	
-0024	
-0125	M39012/40-0007, M39012/40-0030
B0026	M39012/40-0008, M39012/40-0031
-0027	M39012/40-0009, M39012/40-0032
-0501	M39012/40-0012, M39012/40-0033
-0502	M39012/40-0013, M39012/40-0034
-0503	M39012/40-0035
-0504	

1/ The superseded PIN or the type designation is for cross-reference only. Where a superseded PIN or type designation is not given, none was assigned or will be assigned. The PIN M39012/01-XXXX shall be used in all cases for marking and identifying the connector.

2/ The basic type designation includes all letter versions of the specified number, e.g., UG-18/U includes UG-18A/U, UG-18B/U, etc.

TABLE V. Maintenance replacements for category B.

Category B number 1/	Category C dash number	Category A dash number	Category D dash number
B0006	0016	0101	---
B0007	0017	0005	0502
B0008	0018	0005	0501
B0011	0021	0005	---
B0012	0022	0005	0501
B0013	0023	0005	---
B0014	0024	0005	---
B0026	0027	0101	---

1/ Category B connectors are for original installation only. They will not be stocked or procured by the Government.

Revision letters are not used to denote changes due to the extensiveness of the changes.

CONCLUDING MATERIAL

Custodians:
Army - CR
Navy - EC
Air Force - 85
NASA - NA

Review activities:
Army - AR, AT, EA, MI
Navy - AS, MC, OS, SH
Air Force - 11, 19, 99

Preparing activity:
DLA - ES

(Project 5935-3932-01)