INCH-POUND

NOTE: The document identifier and heading has been changed on this page to reflect that this is a performance specification. There are no other changes to this document. The document identifier on subsequent pages has not been changed, but will be changed the next time this document is revised.

MIL-PRF-39012/19G
26 September 1994
SUPERSEDING
MIL-C-39012/19F
3 October 1986

PERFORMANCE SPECIFICATION SHEET

CONNECTORS, RECEPTACLE, ELECTRICAL, COAXIAL, RADIO FREQUENCY, (SERIES BNC (CABLED), SOCKET CONTACT, JAM NUT MOUNTED, CLASS 2)

This specification is approved for use by all Departments and Agencies of the Department of Defense.

The requirements for acquiring the product described herein shall consist of this specification sheet and the issue of the following specification listed in that issue of the Department of Defense Index of Specifications and Standards (DODISS) specified in the solicitation: MIL-PRF-39012.

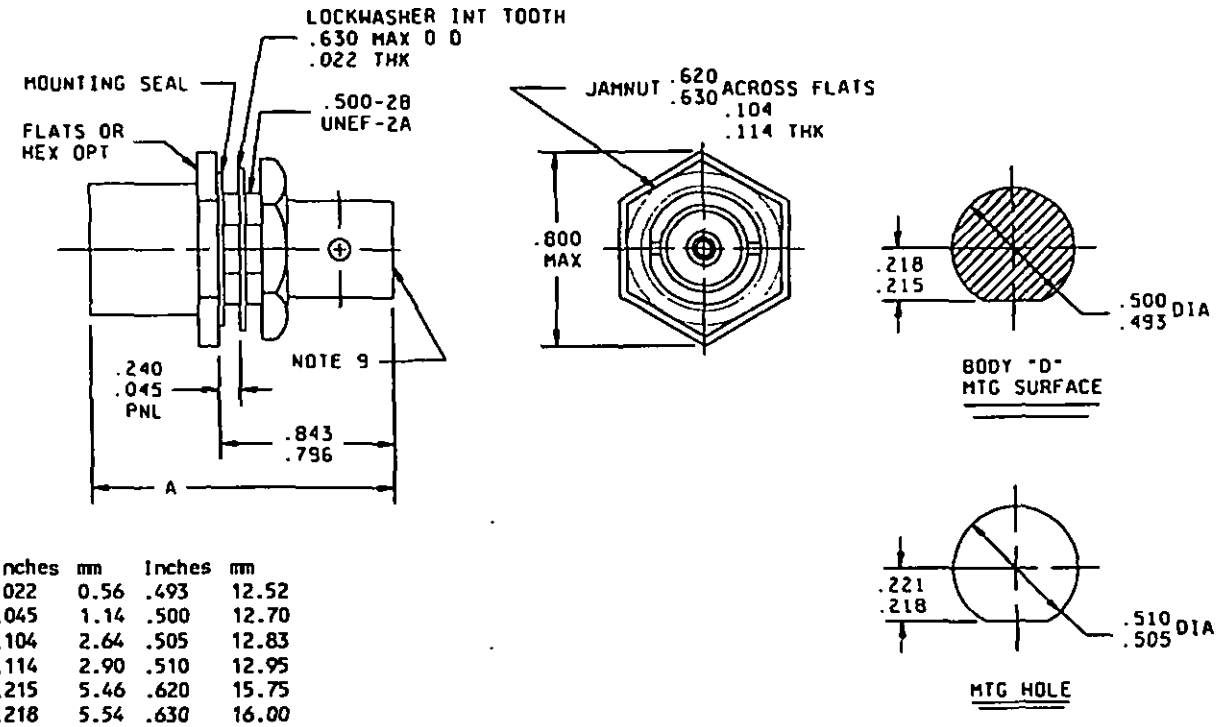

Inches	mm	Inches	mm
.022	0.56	.493	12.52
.045	1.14	.500	12.70
.104	2.64	.505	12.83
.114	2.90	.510	12.95
.215	5.46	.620	15.75
.218	5.54	.630	16.00
.221	5.61	.796	20.22
.240	6.10	.800	20.32
		.843	21.41

NOTES:
1. Dimensions are in inches.
2. Metric equivalents are given for information only.
3. For dimension A, see tables I and III.
4. Dimension .800 (20.32 mm) is the largest overall diameter of the connector.
5. Wrench flats are to accommodate standard wrench opening in accordance with FED-STD-H28, appendix 10.
6. Orientation of the body hex flats, mounting flats and bayonet studs shall be ±3° of that orientation shown.
7. All undimensioned pictorial representations are for reference purposes only.
8. Dimension A defines the maximum length of the connector when assembled to the appropriate cable.
9. Series BNC, socket contact interface in accordance with MIL-STD-348.

FIGURE 1. General configuration.

DISTRIBUTION STATEMENT A. Approved for public release; distribution is unlimited.

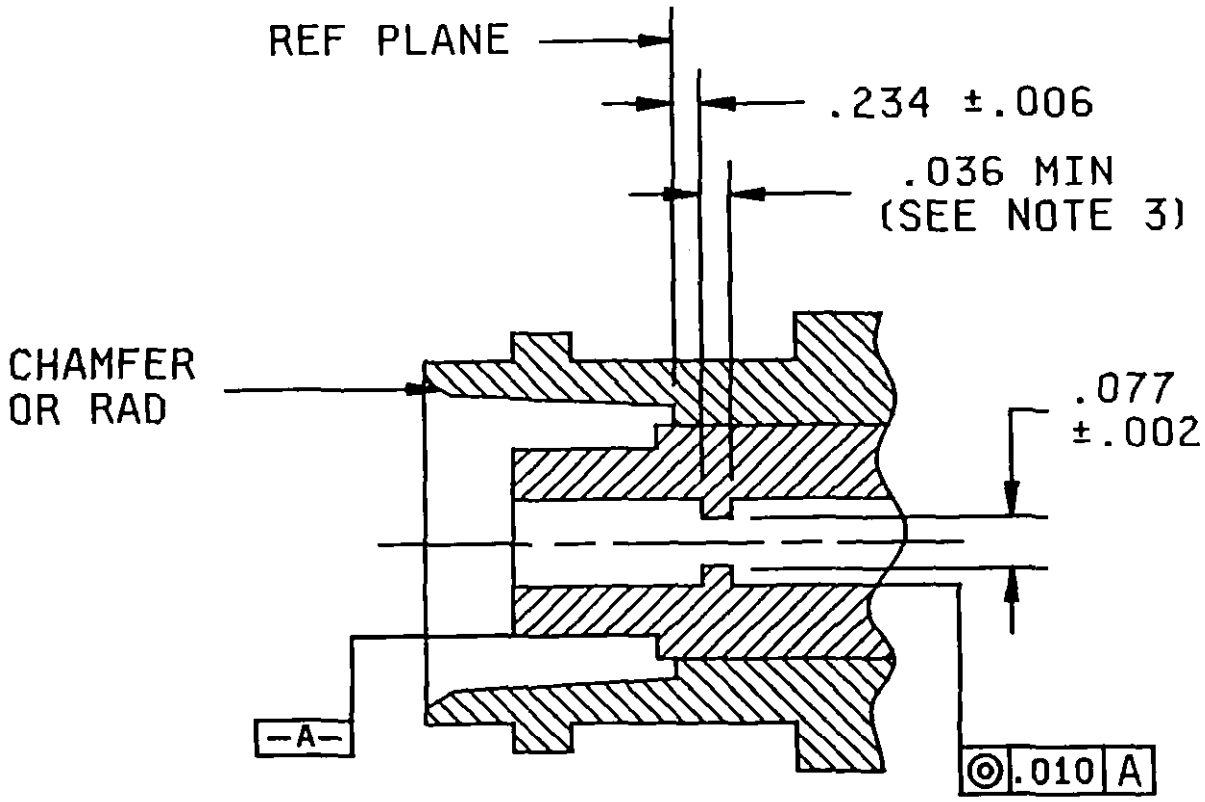

CATEGORY D

Inches	mm
.002	0.05
.006	0.15
.010	0.25
.036	0.91
.077	1.96
.234	5.94

NOTES:
1. Dimensions are in inches.
2. Metric equivalents are given for information only.
3. Chamfer is optional.
4. Concave depression .100 (2.54 mm) x .005 (0.13 mm) deep between studs permissible.

FIGURE 2. Category D captivation detail.

TABLE I. Dash numbers, cross-reference, and dimensions.

Dash number 1/	Applicable cable 2/ M17/	Dimensions	Inches (millimeters) maximum
Category A - Field serviceable (no special tools required) 3/			
0101 (Superseding -0111 4/) Cable group VI	28-RG058 155-00001 183-00001 197-00001 111-RG303 170-00001 60-RG142 5/ 158-00001 84-RG223 167-00001 194-00001 200-00001 128-RG400 6/ 175-00001	A	1.250 (31.75)
0102 (Superseding -118 4/) Cable group VII	29-RG59 7/ 184-00001 7/ 110-RG302 5/ 6/ 7/ 30-RG062 7/ 185-00001 7/ 97-RG210 7/ 90-RG71 7/ 195-00001 7/		
0110 Cable group IV	54-RG122 6/ 157-00001 187-00001 198-00001		
0220 Cable group II	113-RG316 5/ 6/ 119-RG174 173-00001 196-00001 172-00001 94-RG179 7/		
0225 Cable group X	74-RG213 6-RG11 7/ 181-00001 7/ 62-RG144 7/ 65-RG165 159-00001 189-00001 163-00001 75-RG214 190-00001 164-00001 86-00001 127-RG393 5/ 6/ 174-00001 77-RG216 7/ 191-00001 7/		

See footnotes at end of table.

TABLE I. Dash numbers, cross-reference, and dimensions - Continued.

Dash number 1/	Applicable cable 2/ M17/	Dimensions	Inches (millimeters) maximum
Category C - Field replaceable (MIL-C-22520 crimp tool) See footnote next to applicable cable for crimp die 3/ 8/			
0013 Cable group VIA	28-RG058 9/ 155-00001 9/ 183-00001 9/ 197-00001 9/ 111-RG303 5/ 6/ 9/ 170-00001 9/	A	1.625 (41.28)
0014 Cable group VIB	84-RG223 9/ 60-RG142 5/ 9/ 158-00001 9/ 167-00001 9/ 194-00001 9/ 200-00001 9/ 128-RG400 6/ 9/ 175-00001 9/		
0015 (Superseding -0020 4/) Cable group VIIA	29-RG59 7/ 10/ 184-00001 7/ 10/ 110-RG302 5/ 6/ 7/ 10/ 30-RG062 7/ 10/ 185-00001 7/ 10/ 97-RG210 7/ 10/		
0016 Cable group IV	54-RG122 6/ 11/ 157-00001 11/ 187-00001 11/ 198-00001 11/		
0017 Cable group VIIB	90-RG71 6/ 7/ 10/ 195-00001 7/ 10/		
0221 Cable group IIA	113-RG316 5/ 6/ 12/ 119-RG174 12/ 173-00001 12/ 196-00001 12/ 172-00001 12/		
Category D - Field replaceable - Defined piece part 3/ 8/ 13/ 14/			
0501 Cable group IV	54-RG122 6/ 157-00001 187-00001 198-0000	A	1.468 (37.31)
0502 Cable group V	95-RG180 5/ 6/ 7/		
0503 Cable group VIB	60-RG142 5/ 158-00001 84-RG223 167-00001 194-00001 200-00001 128-RG400 6/ 175-00001		
0504 Cable group VIA	28-RG058 155-00001 183-00001 197-00001 111-RG303 5/ 6/ 170-00001		

See footnotes at end of table.

TABLE I. Dash numbers, cross-reference, and dimensions - Continued.

1/ For cross-reference of dash number to superseded PIN or designation, see table IV.

2/ The latest version of each cable shall be applicable.

3/ These connectors have captivated center contacts.

4/ The superseded PIN are acceptable for Government use until stock is purged or 3 years from the date of this specification which ever is earlier.

5/ Cable to be used for the +200°C temperature cycling tests.

6/ Cable to be used when performing test requiring cable except as in 5/ and 7/.

7/ These are not 50-ohm cables; therefore, when attached to the specified connectors, VSWR, RF, leakage and insertion loss are not applicable.

8/ These connectors are assembled using the applicable crimp tool, to the specified cables stripped as shown on figure 4.

9/ M22520/5-19 closure B or M22520/5-05 closure A.
M22520/5-11 closure A.
M22520/5-57 closure A.

10/ M22520/5-19 closure A or M22520/5-07 closure A.
M22520/5-13 closure A.
M22520/5-59 closure A.

11/ M22520/5-41 closure B or M22520/5-05 closure B.
M22520/5-09 closure A.

12/ M22520/5-35 closure B or M22520/5-03 closure A.

13/ Complete connector assembly shall consist of a body, center contact, ferrule and assembly instructions.

14/ Not to be used in Army equipment.

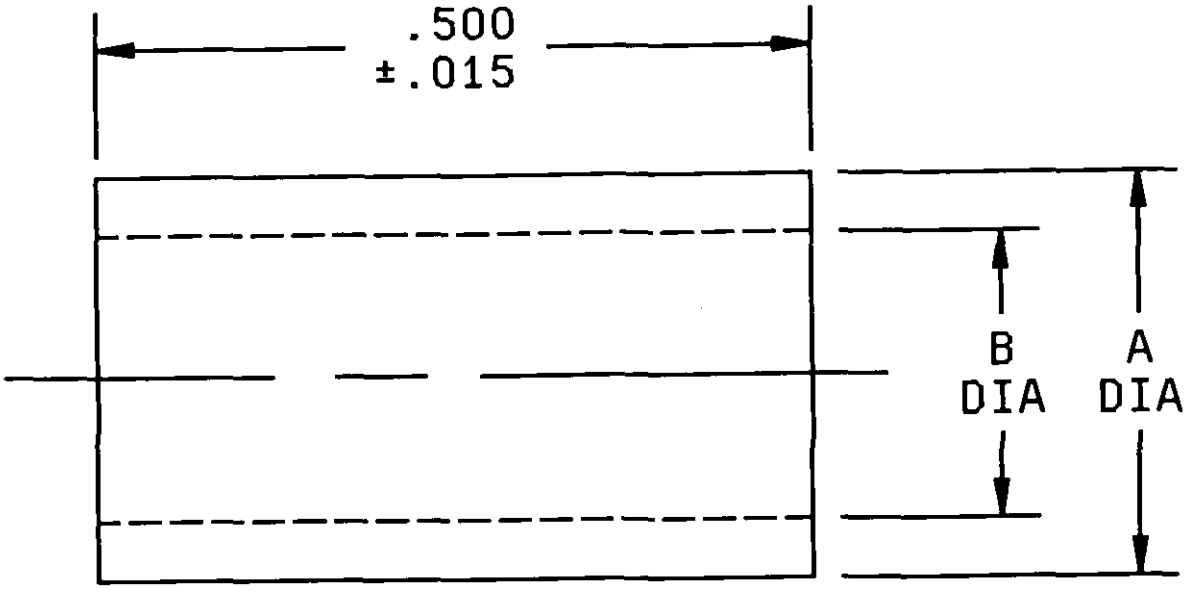

CRIMP FERRULE

Inches	mm
.015	0.38
.500	12.70

Dash number	Ferrule number 1/	A ±0.003	B ±0.003	Basic crimp tool 2/	Crimp die or positioner M22520/5
0501 0502	19-50	0.212	0.175	M22520/5-01	05, 41 or Closure B or 9 Closure A
0503	19-51	0.250	0.220		05, 11, 57 Closure A or 19 Closure B
0504	19-52	0.245	0.206		

1/ Contact numbers and ferrule numbers are for identification only.
2/ Class 2 tool may be used by OEM (see MIL-C-22520).

FIGURE 3. Contact and ferrule dimensions for category D only.

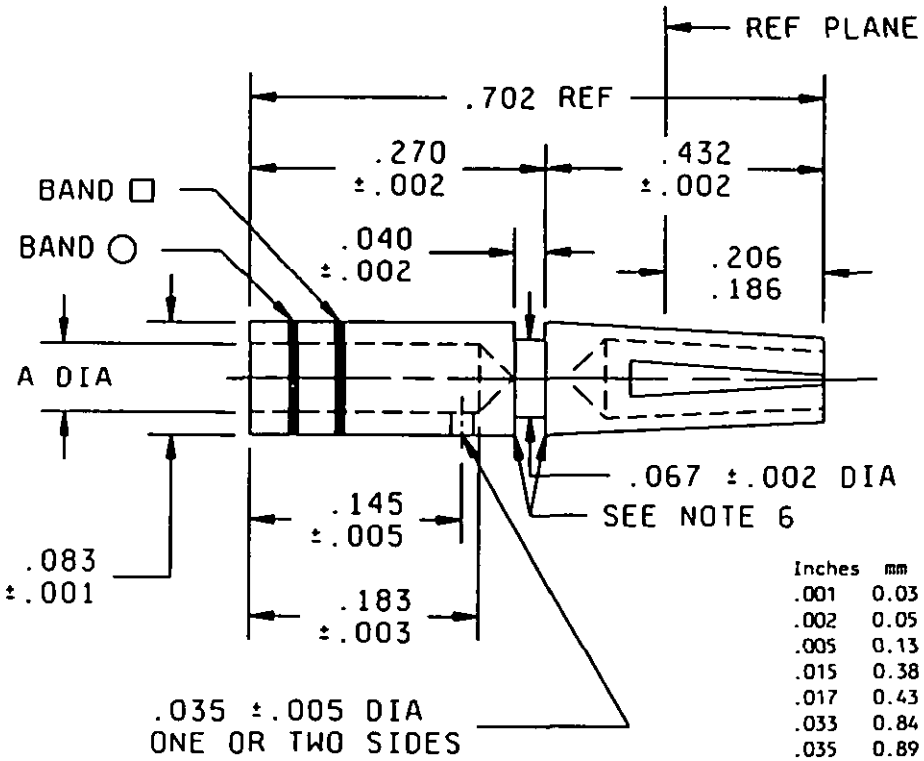

Inches	mm	Inches	mm
.001	0.03	.175	4.45
.002	0.05	.183	4.65
.005	0.13	.186	4.72
.015	0.38	.206	5.23
.017	0.43	.212	5.38
.033	0.84	.220	5.59
.035	0.89	.245	6.22
.040	1.02	.250	6.35
.043	1.09	.270	6.86
.067	1.70	.432	10.97
.083	2.11	.500	12.70
.145	3.68	.702	17.83

CENTER CONTACT

Dash number	Contact number 1/	A +0.001 -0.002	Basic crimp tool 2/	Crimp die or positioner	Crimp tensile min	Color band □	Color band ○
0501	19-12	0.033	M22520/1-01	M22520/1-12	10 lbs	Orn	Blue
0502	19-11	0.017			6 lbs	Blue	
0503 0504	19-10	0.043	M22520/1-01	M22520/1-12	20 lbs	Red	

1/ Contact numbers and ferrule numbers are for identification only.
2/ Class 2 tool may be used by OEM (see MIL-C-22520).

NOTES:
1. Dimensions are in inches.
2. Metric equivalents are given for information only.
3. Contact material shall be phosphor bronze or copper beryllium.
4. Crimp tensile test shall be in accordance with MIL-C-39029.
5. Copyright notice: All information disclosed in these specification sheets which is or may be copyright is reproduced herein with the express permission of the copyright owner.
6. .003 maximum break.
7. Color bands shall be positioned so that no coloring material enters the inspection hole.

FIGURE 3. Contact and ferrule dimensions for category D only - Continued.

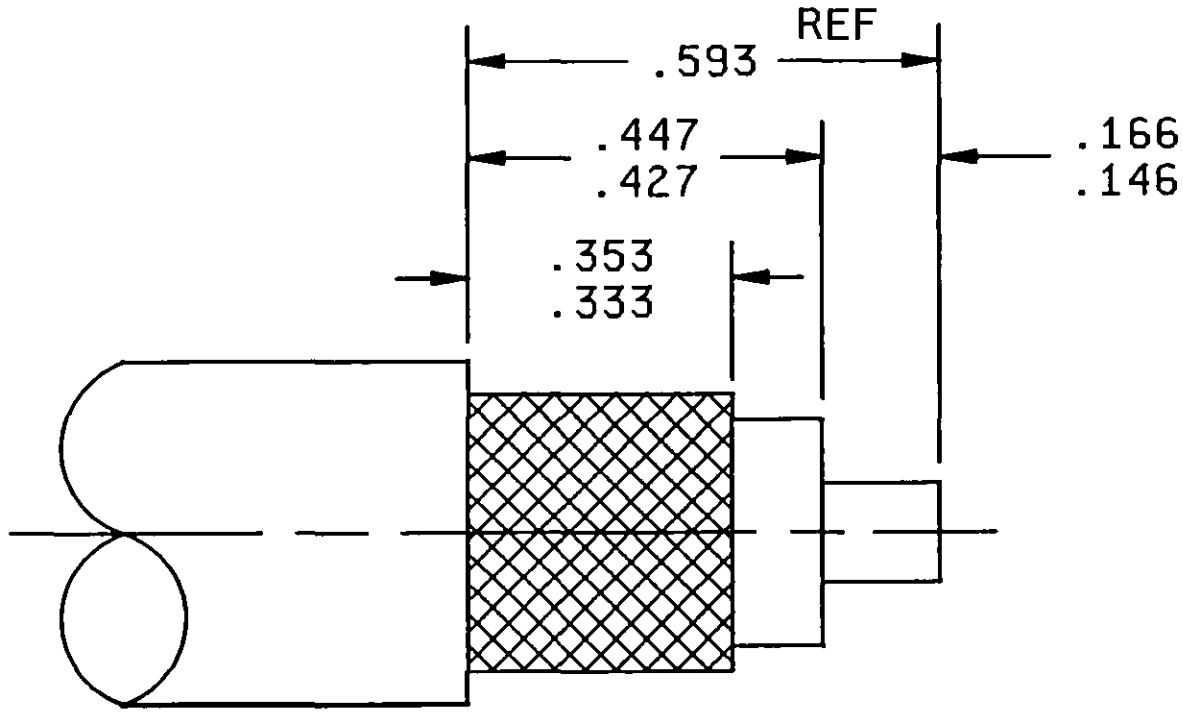

Inches	mm
.146	3.71
.166	4.22
.333	8.46
.353	8.97
.427	10.85
.447	11.35
.593	15.06

NOTES:
1. Dimensions are in inches.
2. Metric equivalents are given for information only.

FIGURE 4. Cable stripping dimensions for field replaceable connectors.

ENGINEERING DATA:

Nominal impedance: 50 ohms.

Frequency range: 0 to 4,000 MHz.

Voltage rating:

500 volts rms, maximum working voltage at sea level.

125 volts rms, maximum at 70,000 feet.

Temperature rating: -65°C to +165°C.

REQUIREMENTS:

Dimensions and configuration: See figure 1.

Force to engage and disengage:

Longitudinal force: 3 pounds, maximum.

Torque: 2-1/2 inch-pounds, maximum.

Coupling proof torque: Not applicable.

Inspection conditions: Coupling torque not applicable.

Mating characteristics:

Reference MIL-STD-348 and figure 2 for dimensions.

Center contact (socket):

Oversize test pin: .057 diameter, minimum (nonclosed entry contacts only).

Insertion depth: .125, minimum.

Number of insertions: 1.

Insertion force test: Steel test pin diameter .054, minimum.

Test pin finish: 16 microinches.

Insertion force: 2 pounds, maximum.

Withdrawal force test: Steel test pin diameter .052, maximum.

Withdrawal force: 2 ounces, minimum.

Test pin finish: 16 microinches.

Hermetic seal: Not applicable.

Leakage: Connector shall be mounted in mounting hole shown on figure 1 with mating end capped. Test applicable to mounting seal only.

Air pressure - 30 lbf/in^2.

Duration - 30 seconds, minimum.

Insulation resistance: Method 302 of MIL-STD-202, test condition B, 5,000 megohms, minimum.

Center contact retention: 6 pounds, minimum axial force. Applicable to captivated-center-contact connectors only.

Corrosion (salt spray): Method 101 of MIL-STD-202, test condition B.

Voltage standing wave ratio (VSWR): From 500 to 4,000 MHz, or approximately 80 percent of upper cutoff frequency of the cable, whichever is lower; 1.30, maximum.

Swept frequency VSWR test setup:

Item 6: VSWR shall be less than 1.015+.005 F (F in GHz).

Item 16: VSWR shall be less than 1.015+.005 F (F in GHz).

Second step of VSWR checkout procedure: VSWR shall be less than 1.045+.019 F (F in GHz).

Group B inspection: VSWR shall be less than 1.1+.01 F (F in GHz).

Qualification and group C inspection: VSWR shall not exceed 1.15.

Connector durability: 500 cycles, minimum at 12 cycles per minute, maximum. The connector shall meet the mating characteristics and force to engage and disengage requirements.

Contact resistance: In milliohms, maximum:

	Initial	After environment
Center contact	1.5	2.0
Outer contact	.2	Not applicable
Braid to body	.1	Not applicable

Dielectric withstanding voltage: Method 301 of MIL-STD-202, 1,500 volts rms, minimum at sea level.

Vibration, high frequency: Method 204 of MIL-STD-202, test condition B. No discontinuity permitted.

Shock: Method 213 of MIL-STD-202, test condition G. No discontinuity permitted.

Thermal shock: Method 107 of MIL-STD-202, test condition B, except test high temperature shall be +85°C. High temperature shall be +200°C for connectors using +200°C cables (see tables I and III).

Moisture resistance: Method 106 of MIL-STD-202. No measurements at high humidity. Insulation resistance shall be at least 200 megohms within 5 minutes after removal from humidity.

Corona level:

Voltage: 375 volts rms, minimum.

Altitude: 70,000 feet.

RF high potential withstanding voltage:

Voltage and frequency: 1,000 volts rms at a frequency from 5 to 7.5 MHz.

Leakage current: Not applicable.

Cable retention force:

Noncrimp assemblies: 40 pounds, minimum.

Crimp assemblies:

10 pounds, minimum for cables .155 - .189 OD.

20 pounds, minimum for cables .190 - .229 OD.

30 pounds, minimum for cables .230 - .249 OD.

40 pounds, minimum for cables .250 OD and larger.

Coupling mechanism retention force: Not applicable.

RF leakage: -55 dB minimum, tested at a frequency between 2 and 3 GHz.

Insertion loss: .2 dB maximum tested at 3 GHz.

Part or Identifying Number (PIN): M39012/19 (dash number from table I or "B" number from table III).

Group qualification: See table II.

TABLE II. Group qualification. 1/

Group	Submission and qualification of 2/ any of the following connectors	Qualifies the following connectors
	M39012/	M39012/
I	17-0101	17-0101
	17-0103	17-0102
	17-0111	17-0103
	17-0118	17-0111
	18-0102	17-0118
	18-0103	18-0101
	18-0111	18-0102
	18-0118	18-0103
	19-0101	18-0111
	19-0110	18-0118
	19-0111	19-0101
	19-0118	19-0102
	19-0220	19-0110
		19-0111
		19-0118
		19-0220
II	17-0102	17-0102
	18-0101	18-0101
	19-0102	19-0102
III	17B0004	17B0004
	17B0005	17B0005
	17B0006	17B0006
	17B0007	17B0007
	17B0009	17B0008
	17B0019	17B0009
	18B0004	17B0012
	18B0005	17B0019
	18B0006	18B0004
	18B0007	18B0005
	18B0009	18B0006
	18B0019	18B0007
	19B0003	18B0008
	19B0004	18B0009
	19B0005	18B0012
	19B0006	18B0019
	19B0008	19B0003
	19B0019	19B0004
		19B0005
		19B0006
		19B0007

See footnotes at end of table.

TABLE II. Group qualification - Continued. 1/

Group	Submission and qualification of 2/ any of the following connectors M39012/	Qualifies the following connectors M39012/
III		19B0008 19B0012 19B0019
IV	17B0008 17B0012 18B0008 18B0012 19B0007 19B0012	17B0008 17B0012 18B0008 18B0012 19B0007 19B0012
V	17-0013 17-0014 17-0016 17-0020 18-0013 18-0014 18-0016 18-0020 19-0013 19-0014 19-0016 19-0020 19-0221	17-0013 17-0014 17-0015 17-0016 17-0017 17-0020 18-0013 18-0014 18-0015 18-0016 18-0017 18-0020 19-0013 19-0014 19-0015 19-0016 19-0017 19-0020 19-0221
VI	17-0015 17-0017 18-0015 18-0017 19-0015 19-0017	17-0015 17-0017 18-0015 18-0017 19-0015 19-0017
VII	19-0501 19-0503 19-0504	19-0501 19-0502 19-0503 19-0504
VIII	19-0502	19-0502

1/ If a connector manufacturer produces a connector which meets all the requirements for two or more connector PIN's (within the same series), the manufacturer may receive qualification approval for two or more connector PIN's qualifying the one connector. It is not necessary that such connectors be in the same group. Each connector, however, must be marked with its own appropriate PIN. For group qualification, the connectors must be of similar design.

2/ For qualification retention, where more than one part is listed in a group in this column, data may be supplied on any of those parts in order to retain qualification for those parts in the corresponding right hand column. The part does not necessarily have to be the part initially qualified.

TABLE III. Category B - Nonfield replaceable (special tools may be required).

Not for Air Force, Army, or Navy use. For OEM use only

Dash number 1/ 2/ 3/	Applicable cable M17/ 4/	Dimensions	Inches (millimeters) maximum
M39012/19B0003	028-RG058*		
M39012/19B0004	084-RG223*		
M39012/19B0005	111-RG303*		
M39012/19B0006	060-RG142*@ 29-RG59*Δ 030-RG062Δ	A	1.625 (41.28)
M39012/19B0007	97-RG210Δ		
M39012/19B0008	054-RG122*		
M39012/19B0012	90-RG71*Δ		
M39012/19B0019	110-RG302*@Δ		

1/ For cross-reference of dash number to superseded PIN or type designation, see table IV.

2/ For maintenance replacements for category B, see table V.

3/ Inactive for new design.

4/ The latest version of each cable shall be applicable.

* Cable to be used when performing tests requiring cable except as in notes @ and Δ.

@ Cable to be used for the +200°C temperature cycling tests.

Δ These are not 50 ohm cables; therefore, when attached to the specified connectors, VSWR, RF leakage, and insertion loss are not applicable.

TABLE IV. Cross-reference of PIN's.

Preferred PIN M39012/19	Substitute for PIN or type designation 1/ 2/
-0101	UG-909/U, M39012/19-0001
-0102	UG-910/U, M39012/19-0002
B0003	M23329/3-15, M39012/19-0003
B0004	M23329/3-16, M39012/19-0004
B0005	M23329/3-17, M39012/19-0005
B0006	M23329/3-18, M39012/19-0006
B0007	M23329/3-19, M39012/19-0007
B0008	M23329/3-20, M39012/19-0008
-0110	M39012/19-0010
-0111	M39012/19-0011
B0012	M39012/19-0012
-0013	
-0014	
-0015	
-0016	
-0017	
-0018	M39012/19-0018
B0019	M39012/19-0019
-0020	
-0501	
-0502	
-0503	
-0504	

1/ The superseded PIN or the type designation is for cross-reference only. Where a superseded PIN or type designation is not given, none was assigned or will be assigned. The PIN M39012/19-XXXX shall be used in all cases for marking and identifying the connector.

2/ The basic type designation includes all letter versions of the specified number, e.g. UG-18/U includes UG-18 A/U, UG-18B/U, etc.

TABLE V. Maintenance replacements for category B.

Category B number* Inactive for new design	Category C dash number	Category A dash number	Category D dash number
B0003	0013	0101	0504
B0004	0014	0101	---
B0005	0013	0101	---
B0006	0014	0101	0503
B0007	0015	0102	---
B0008	0016	0110	0501
B0012	0017	0102	---
B0019	0020	0118	---

*Category B connectors are for original installation only. They will not be stocked or acquired by the Government.

Revision letters are not used to denote changes due to the extensiveness of the changes.

CONCLUDING MATERIAL

Custodians:
Army - CR
Navy - EC
Air Force - 85
NASA - NA

Review activities:
Army - AT, AV, CR, EA, MI
Navy - AS, MC, OS, SH
Air Force - 11, 19, 99

Preparing activity:
DLA - ES

(Project 5935-3932-09)