INCH-POUND

NOTE: The document identifier and heading has been changed on this page to reflect that this is a performance specification. There are no other changes to this document. The document identifier on subsequent pages has not been changed, but will be changed the next time this document is revised.

MIL-PRF-39012/39G
26 September 1994
SUPERSEDING
MIL-C-39012/39F
14 December 1987

PERFORMANCE SPECIFICATION SHEET

CONNECTORS, RECEPTACLE, ELECTRICAL, COAXIAL, RADIO FREQUENCY (SERIES SC (CABLED), PIN CONTACT, RIGHT ANGLE, CLASS 2)

This specification is approved for use by all Departments and Agencies of the Department of Defense.

The requirements for acquiring the product described herein shall consist of this specification sheet and the issue of the following specification listed in that issue of the Department of Defense Index of Specifications and Standards (DODISS) specified in the solicitation: MIL-PRF-39012.

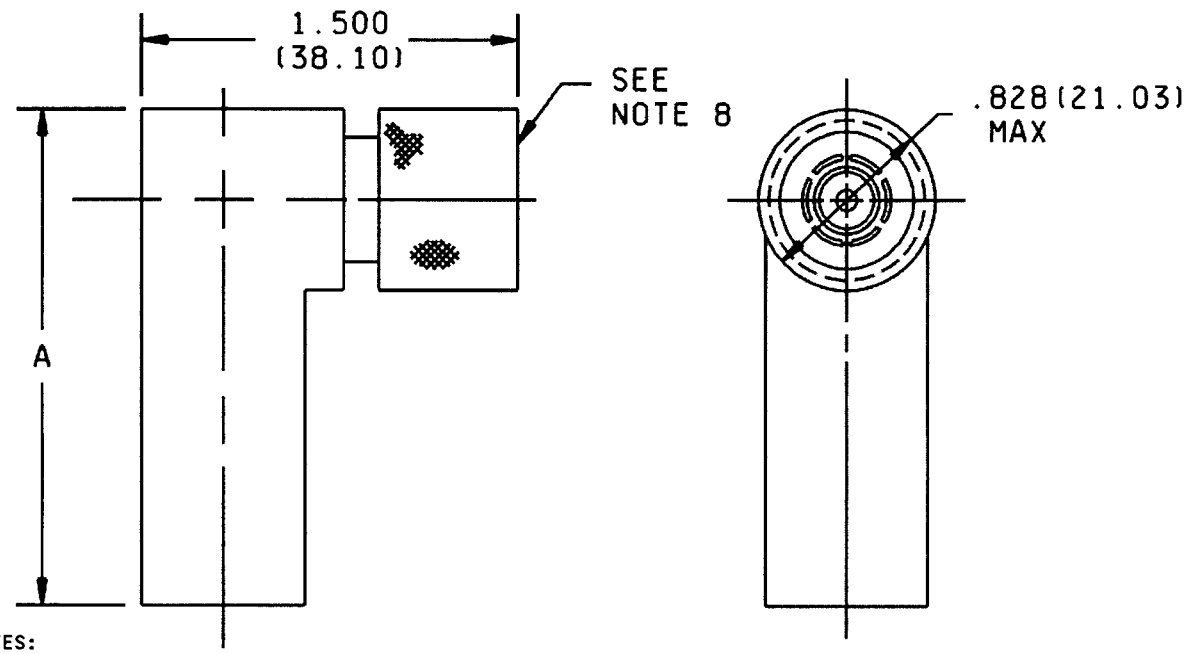

NOTES:
1. Dimensions are in inches.
2. Metric equivalents are given for information only.
3. For dimension A, see tables I and III.
4. Dimension A is the maximum envelope dimension.
5. Wrench flats to accommodate standard wrench in accordance with FED-STD-H28, appendix 10.
6. Dimension A defines the maximum length of the connector when assembled to the appropriate cable.
7. All undimensioned pictorial configurations are for reference purposes only.
8. Series SC, pin contacts, in accordance with MIL-STD-348, 309.1.

FIGURE 1. General configuration.

DISTRIBUTION STATEMENT A. Approved for public release; distribution is unlimited.

TABLE I. Dash numbers, cross-reference, and dimensions.

Dash no. 1/	Applicable cable M17/ 2/	Dimensions	Inches (millimeters) maximum
CATEGORY A - FIELD SERVICEABLE (NO SPECIAL TOOLS REQUIRED) 3/			
0016 Cable group VIII	2-RG6 4/ 180-00001 4/ 73-RG212 162-00001 188-00001 199-00001 112-RG304 5/ 171-00001	A	1.875 (47.63)
0101 Cable group X	6-RG11 4/ 181-00001 4/ 62-RG144 4/ 65-RG165 159-00001 74-RG213 189-00001 163-00001 75-RG214 190-00001 164-00001 86-00001 6/ 127-RG393 5/ 174-00001 77-RG216 191-00001		
0018 Cable group XII	78-RG217 5/ 165-00001 188-00001		
0019 Cable group XIII	72-RG211 161-00001		
0020 Cable group XIV	79-RG218 5/ 166-00001 193-00001		
0106 Cable group XI	74-RG215 5/ 189-00002		
0107 Cable group IX	92-RG115 5/ 6/ 168-00001		

See footnotes at end of table.

TABLE I. Dash numbers, cross-reference, and dimensions - Continued.

Dash no. 1/	Applicable cable M17/ 2/	Dimensions	Inches (millimeters) maximum
CATEGORY C - FIELD REPLACEABLE (MIL-C-22520 CRIMP TOOL) SEE FOOTNOTE NEXT TO APPLICABLE CABLE FOR CRIMP DIE 3/ 7/			
0010 Cable group VIII	2-RG6 4/ 8/ 180-00001 4/ 8/ 73-RG212 8/ 162-00001 8/ 188-00001 8/ 199-00001 8/ 112-RG304 5/8/ 171-00001 8/	A	2.125 (53.98)
0004 Cable group XA	65-RG165 5/6/9/ 159-00001 9/ 74-RG213 9/ 189-00001 9/ 163-00001 9/		
0005 Cable group XB	75-RG214 9/ 190-00001 9/ 164-00001 9/ 86-00001 6/9/ 127-RG393 5/9/ 174-00001 9/		
0013 Cable group XC	6-RG11 4/9/ 181-00001 4/9/ 62-RG144 4/5/6/9/		
0009 Cable group IX	92-RG115 5/6/9/ 168-00001 9/		
CATEGORY D - FIELD REPLACEABLE - DEFINED PIECE PART 3/7/10/11/			
0501 Cable group XB	75-RG214 190-00001 164-00001 86-00001 6/ 127-RG393 5/ 174-00001	A	2.125 (53.98)
0502 Cable group XA	65-RG165 5/ 159-00001 74-RG213 189-00001 163-00001		
0503 Cable group VIB	60-RG142 6/ 158-00001 84-RG223 167-00001 194-00001 200-00001 128-RG400 5/ 175-00001	A	2.125 (53.98)

See footnotes at end of table.

TABLE I. Dash numbers, cross-reference, and dimensions - Continued.

1/ For cross-reference of dash number to superseded PIN or type designation, see table IV.

2/ The latest version of each cable shall be applicable.

3/ These connectors have captivated center contacts.

4/ These are not 50-ohm cables; therefore, when attached to the specified connectors, VSWR, RF leakage, and insertion loss are not applicable.

5/ Cable to be used when performing tests requiring cable except as in 4/ and 6/.

6/ Cable to be used for the 200°C temperature cycling tests.

7/ These connectors are assembled, using the applicable crimp tool, to the specified cable stripper as shown on figure 4.

8/ M22520/5-35 closure A or M22520/5-55 closure A.

9/ M22520/5-61.

10/ Complete connector assembly shall consist of a body, center contact, ferrule, and assembly instructions.

11/ Not to be used in army equipment.

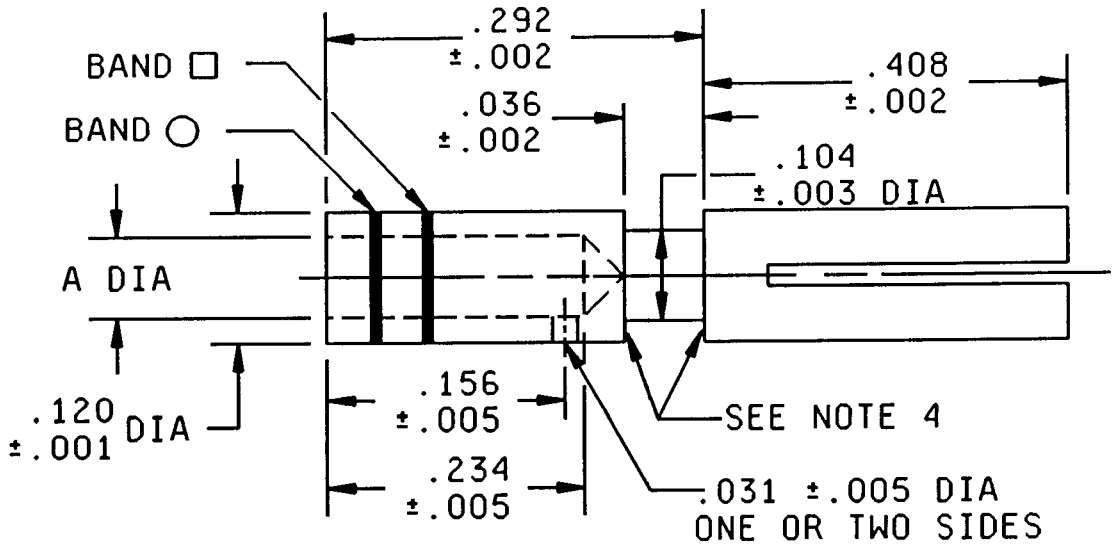

CENTER CONTACT

Inches	mm	Inches	mm	Inches	mm	Inches	mm
.001	0.03	.043	1.09	.250	6.35	.418	10.62
.002	0.05	.098	2.49	.292	7.42	.438	11.13
.003	0.08	.104	2.64	.351	8.92	.492	12.50
.005	0.13	.120	3.05	.375	9.52	.500	12.70
.015	0.38	.156	3.96	.394	10.01	.600	15.24
.031	0.79	.220	5.59	.406	10.31		
.036	0.91	.234	5.94	.408	10.36		

Dash no.	Contact no. 1/	A (inches)	Basic crimp tool 2/	Crimp die or positioner	Crimp tensile minimum	Color band □	Color band ○
0501 0502	39-10	.098 ±.002	M22520/1-01	M22520/1-13	60 pounds	Red	Orange
0503	39-11	.043 +.001 -.002			20 pounds	Blue	

1/ Contacts numbers are for identification only.
2/ Class 2 tool may be used by OEM (see MIL-C-22520).

NOTES:
1. Dimensions are in inches.
2. Metric equivalents are given for information only.
3. Crimp tensile test shall be in accordance with MIL-C-39029.
4. Maximum break of .003 inch (0.08 mm).
5. Copyright notice: All information disclosed in these specification sheet which is or may be copyrighted is reproduced herein with the express permission of the copyright owner.
6. Form socket to mate with .063/.066 diameter pin.
7. Color bands shall be positioned such that no coloring material enters the inspection hole.

FIGURE 2. Contact and ferrule dimensions for category D only.

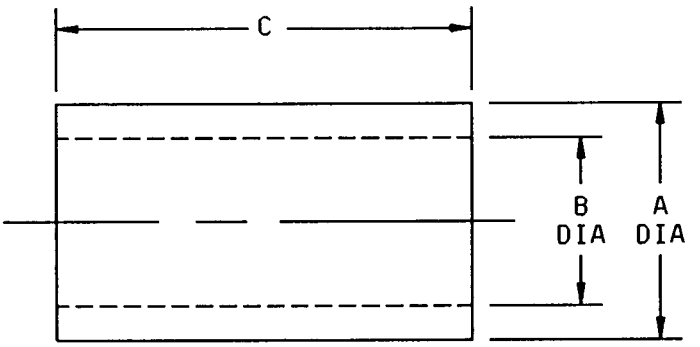

Dash number	Ferrule number 1/	A	B	C ±.015	Basic crimp tool 2/	Crimp die or positioner M22520/5-
0501	39-50	.492 ±.003	.438 ±.003	.600	M22520/5-01	25 Closure A or 61
0502	39-51	.492 ±.003	.418 ±.003	.600		
0503	39-52	.250 ±.003	.220 ±.003	.500		5, 11, 57 Closure A or 19 Closure B

1/ Ferrule numbers are for identification only.

2/ Class 2 tools may be used by OEM (see MIL-C-22520).

FIGURE 2. Contact and ferrule dimensions for category D only - Continued.

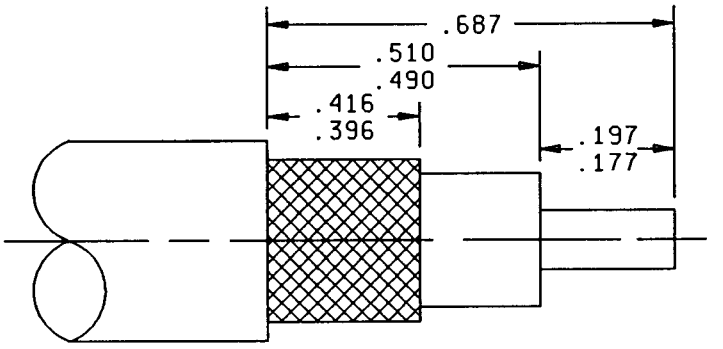

Inches	mm
.177	4.50
.197	5.00
.396	10.06
.416	10.57
.490	12.45
.510	12.95
.687	17.45

NOTES:
1. Dimensions are in inches.
2. Metric equivalents are given for information only.

FIGURE 4. Cable stripping dimensions for field replaceable connectors.

ENGINEERING DATA:

Nominal impedance: 50 ohms.

Frequency range: 0 to 11,000 MHz.

Voltage rating:

1,000 volts rms maximum working voltage at sea level.

250 volts rms maximum at 70,000 feet.

Temperature rating: -65°C to +165°C.

REQUIREMENTS:

Design and configuration: See figure 1.

Force to engage and disengage:

Longitudinal force: Not applicable.

Torque: 6 inch-pounds maximum.

Coupling proof torque: 15 inch-pounds.

Inspection conditions: Coupling torque: 6-10 inch pounds.

Mating characteristics: See MIL-STD-348 for dimensions.

Outer contact:

Test ring ID: .411 maximum, 16 microinch finish.

Insertion force: 15 pounds maximum when inserted a minimum of .125.

Contacts with slotted members: Shall contact a .419 minimum diameter ring within .031 of their tip ends.

Hermetic seal: Not applicable.

Leakage (pressurized connectors): Not applicable.

Insulation resistance: Method 302 of MIL-STD-202, test condition B. 5,000 megohms minimum.

Center contact retention: (Applicable to captivated-center-contact connectors only.) 15 pounds minimum axial force for all cables except RG400 and RG142; 6 pounds minimum for RG400 and RG142.

Corrosion (salt spray): Method 101 of MIL-STD-202, test condition B.

Voltage standing wave ratio (VSWR): From 500 to 11,000 MHz, or approximately 80 percent of upper cutoff frequency of the cable, whichever is lower.

From 500 to 9,000 MHz: 1.35 maximum.

From 9,000 to 11,000 MHz: 1.50 maximum.

Swept frequency VSWR test setup:

Item 6: VSWR shall be less than 1.015 +.005 F (F in GHz).

Item 16: VSWR shall be less than 1.015 +.005 F (F in GHz).

Second step of VSWR checkout procedure - VSWR shall be less than 1.045 +.019 F (F in GHz).

Group B inspection - VSWR shall be less than 1.10 +.01 F (F in GHz).

Qualification and group C inspection - VSWR shall not exceed 1.15.

Connector durability: 500 cycles minimum at 12 cycles/minute maximum. The connector shall meet the mating characteristics and force to engage and disengage requirements.

Contact resistance: In milliohms maximum.

	Initial	After environment
Center contact	2.0	2.5
Outer contact	.15	Not applicable
Braid to body	.05	Not applicable

Dielectric withstanding voltage: Method 301 of MIL-STD-202. 3,000 volts rms minimum at sea level for connectors using other than RG400 and RG142; 1,500 volts rms minimum for connectors using RG400 and RG142.

Vibration, high frequency: Method 204 of MIL-STD-202, test condition B. No discontinuity permitted.

Shock: Method 213 of MIL-STD-202, test condition I. No discontinuity permitted.

Thermal shock: Method 107 of MIL-STD-202, test condition B, except test high temperature shall be +85°C. High temperature shall be +200°C for connectors using +200°C cables (see table I and III).

Moisture resistance: Method 106 of MIL-STD-202. No measurements at high humidity. Insulation resistance shall be at least 200 megohms within 5 minutes after removal from humidity.

Corona level:

Voltage: 750 volts rms minimum.

Altitude: 70,000 feet.

RF high potential withstanding voltage:

Voltage and frequency: 2,500 volts rms tested at a frequency from 5 to 7.5 MHz.

Leakage current: Not applicable.

Cable retention force:

Noncrimp assemblies: 75 pounds minimum.

Crimp assemblies:

50 lbs minimum for cables .155-.189 OD.

60 lbs minimum for cables .190-.229 OD.

75 lbs minimum for cables .230-.249 OD.

90 lbs minimum for cables .250 OD and larger.

Coupling mechanism retention force: 100 pounds minimum.

RF leakage: -90 dB minimum, tested at a frequency between 2 and 3 GHz. This requirement may be meet by qualifying the straight connector version for the same cable under MIL-C-39012/35

Insertion loss:

.21 dB maximum at 9 GHz.

$.07 \sqrt{F\ (GHz)}$ dB max tested at 3 GHz and 6 GHz.

Part or Identifying Number (PIN): M39012/39- (dash number from table I or "B" number from table III).

TABLE II. Group qualification. 1/

Group	Submission and qualification of any of the following connectors 2/ M39012/39	Qualifies the following connectors M39012/39
I	-0101	-0101 -0106 -0107
II	B0002	B0002 B0003 B0008
III	-0004	-0004 -0005 -0009
IV	-0501 -0502	-0501 -0502 -0503
V	-0503	-0503

1/ If a connector manufacturer produces a connector which meets all the requirements for two or more connector PIN's (within the same series), the manufacturer may receive qualification approval for two or more connector PIN's by qualifying the one connector. It is not necessary that such connectors be in the same group. Each connector, however, must be marked with its own appropriate PIN. For group qualification, the connectors must be of similar design.

2/ For qualification retention, where more than one part is listed in a group in this column, data may be supplied on any of those parts in order to retain qualification for those parts in the corresponding right-hand column. The part does not necessarily have to be the part initially qualified.

TABLE III. CATEGORY B - NONFIELD REPLACEABLE (SPECIAL TOOLS MAY BE REQUIRED). 1/

NOT FOR ARMY, NAVY, OR AIR FORCE USE. FOR OEM USE ONLY

PIN 2/ 3/ M39012/39B	Applicable cable 4/ M17/	Dimensions	Inches (millimeters) Maximum
0002	65-RG165 5/ 74-RG213	A	2.125 (53.98)
0003	75-RG214 6/ RG-225/U 5/		
0008	92-RG115 5/ 112-RG304		

1/ For maintenance replacements for category B, see table V.

2/ For cross-reference of dash number to superseded PIN or type designation, see table IV.

3/ These connectors have captivated center contacts.

4/ The latest version of each cable shall be applicable.

5/ Cable to be used for the +200°C temperature cycling tests.

6/ Cable to be used when performing tests requiring cable except as in 5/.

TABLE IV. Cross-reference of PIN's. 1/

Preferred PIN M39012/39	Substitute for PIN or type designation M39012/39
-0101	-0001
-0106	-0006
-0107	-0007
B0002	-0002
B0003	-0003
B0008	-0008

1/ The superseded PIN or the type designation is for cross-reference only. Where a superseded PIN or type designation is not given, none was assigned or will be assigned. The PIN M39012/39-XXXX shall be used in all cases for marking and identifying the connector.

TABLE V. Maintenance replacements for category B.

Category B number 1/	Category C dash number	Category A dash number	Category D dash number
B0002	0004	0101	0502
B0003	0005	0101	0502
B0008	0009	0107	0501

1/ Category B connectors are for original installation only. They will not be stocked or procured by the Government.

Revision letters are not used to denote changes due to the extensiveness of the changes.

CONCLUDING MATERIAL

Custodians:
Army - CR
Navy - EC
Air Force - 85
NASA - NA

Review activities:
Army - AT, AV, EA, MI
Navy - AS, MC, OS, SH
Air Force - 11, 19, 99

Preparing activity:
DLA - ES

(Project 5935-3932-28)