MILITARY SPECIFICATION SHEET

CAPACITORS, FIXED, ELECTROLYTIC
(ALUMINUM OXIDE) (POLARIZED), (STACKED FOIL),
NON-ESTABLISHED RELIABILITY, AND ESTABLISHED RELIABILITY
STYLES CU81 (INSULATED) AND CUR81 (INSULATED)

This specification is approved for use by all Departments and Agencies of the Department of Defense.

The complete requirements for procuring the capacitors described herein shall consist of this document and the latest issue of Specification MIL-C-39018.

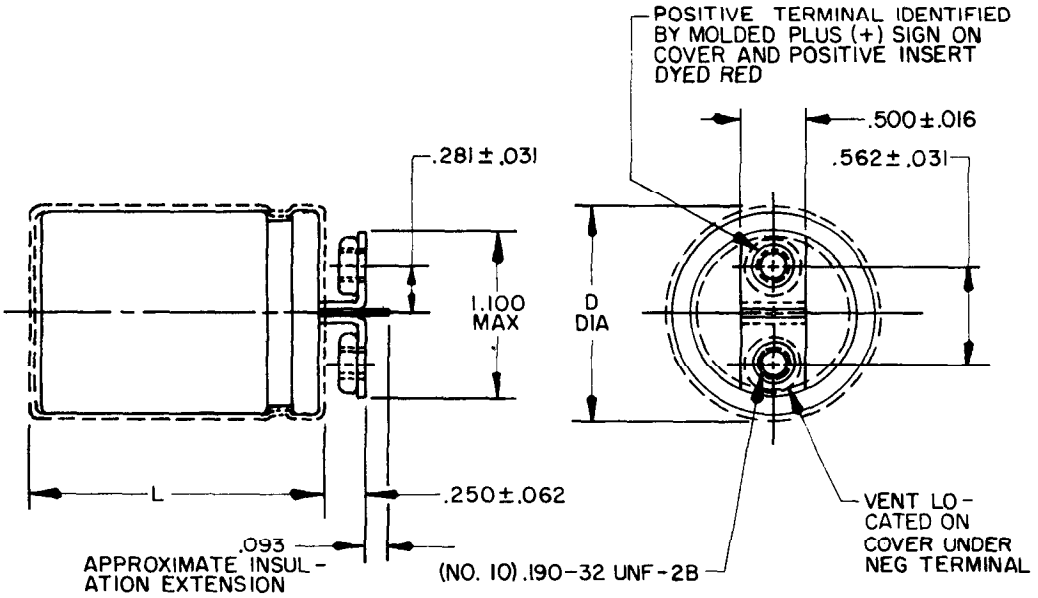

FIGURE 1A

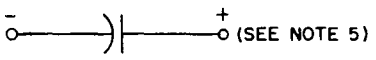

CIRCUIT DIAGRAM

FIGURE 1. Styles CU81 and CUR81 capacitors.

FSC 5910

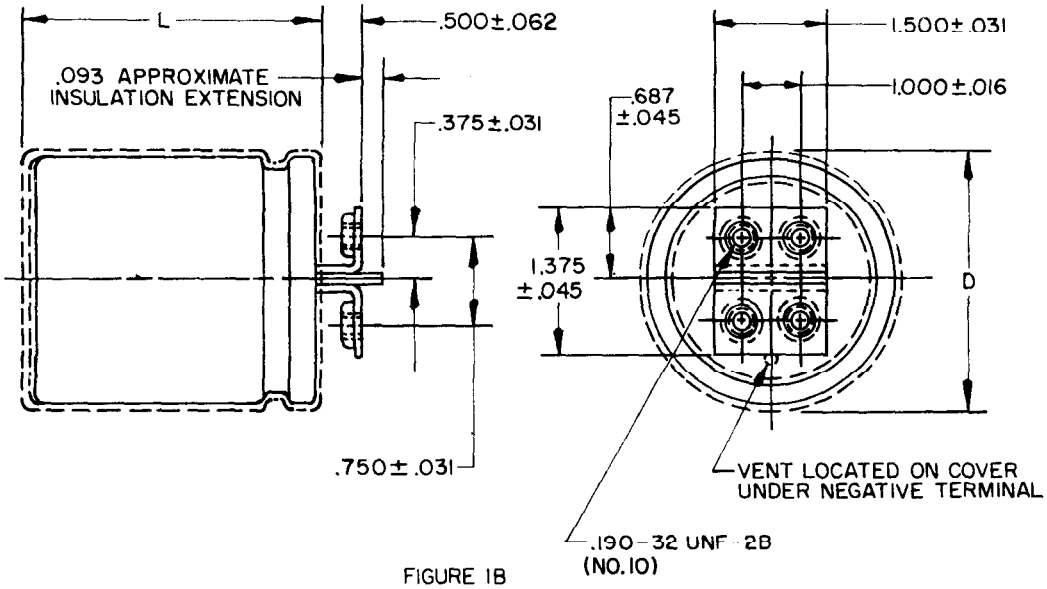

FIGURE 1B

DIMENSIONS

Case size	Fig. No.	Basic case D ±.031	Basic case L ±.062	Insulated case D Max.	Insulated case L Max.
AA	1A	1.375 (34.92)	2.125 (53.98)	1.453 (36.91)	2.250 (57.15)
AC	1A	1.375 (34.92)	4.125 (104.78)	1.453 (36.91)	4.250 (107.95)
DC	1B	3.000 (76.20)	4.125 (104.78)	3.078 (78.18)	4.250 (107.95)
DF	1B	3.000 (76.20)	5.625 (142.88)	3.078 (78.18)	5.750 (146.05)

INCHES	MM	INCHES	MM	INCHES	MM
.016	.41	.281	7.14	1.000	25.40
.031	.79	.375	9.52	1.100	27.94
.045	1.14	.500	12.70	1.375	34.92
.062	1.57	.562	14.27	1.500	38.10
.093	2.36	.687	17.45		
.250	6.35	.750	19.05		

NOTES:
1. Dimensions are in inches.
2. Metric equivalents are given for general information only and are based upon 1.00 inch = 25.4 mm.
3. Metric equivalents are in parentheses.
4. Capacitors are mounted by means of a wraparound, footed-type bracket.
5. There is an indeterminate resistance between the metal case and the negative terminal.
6. Insulating sleeve thickness shall not exceed .016 (.41 mm) and shall overlap the ends of the capacitor body.

FIGURE 1. Styles CU81 and CUR81 capacitors - Continued.

TABLE I. Styles CU81 and CUR81 capacitors.

DC rated voltage @ 85°C	Capacitance	DC surge voltage @ 85°C	ESR (max) @ 120 Hz	Impedance (max) @ 25°C & 10 kHz	DC leakage		RMS ripple current 1/ (max) at 85°C			Case size	Dash number	
					25°C	85°C	60 Hz	120 Hz	400-1000 Hz		Style CU81	Style CUR81 2/
Volts	µF	Volts	Ohms	Ohms	mA		Amperes					
6	3,900	8	0.050	0.022	0.3	3.0	3.6	4.2	4.8	AA	0001	1001-
6	10,000	8	0.018	0.008	0.3	3.0	7.7	9.1	10.4	AC	0002	1002-
6	56,000	8	0.0020	0.0015	0.6	6.0	34.0	40.0	42.0	DC	0003	1003-
6	100,000	8	0.0015	0.0010	0.6	6.0	44.2	52.0	54.6	DF	0004	1004-
7.5	2,700	10	0.072	0.032	0.4	4.0	2.9	3.5	4.0	AA	0005	1005-
7.5	6,800	10	0.027	0.012	0.4	4.0	5.5	6.6	7.7	AC	0006	1006-
7.5	47,000	10	0.0025	0.0015	0.8	8.0	28.8	36.0	37.8	DC	0007	1007-
7.5	68,000	10	0.0020	0.0010	0.8	8.0	36.0	45.0	47.2	DF	0008	1008-
10	2,200	15	0.088	0.040	0.5	5.0	2.7	3.2	3.7	AA	0009	1009-
10	5,600	15	0.032	0.014	0.5	5.0	5.3	6.4	7.5	AC	0010	1010-
10	33,000	15	0.0030	0.0015	1.0	10.0	26.4	33.0	34.7	DC	0011	1011-
10	56,000	15	0.0025	0.0010	1.0	10.0	32.0	40.0	42.0	DF	0012	1012-
15	1,800	20	0.142	0.071	0.8	8.0	2.0	2.4	2.8	AA	0013	1013-
15	4,700	20	0.042	0.025	0.8	8.0	4.0	4.7	5.4	AC	0014	1014-
15	27,000	20	0.011	0.0070	1.6	15.0	13.6	17.0	18.7	DC	0015	1015-
15	39,000	20	0.0055	0.0040	1.6	15.0	21.6	27.0	29.7	DF	0016	1016-
20	1,200	30	0.20	0.070	1.0	10.0	1.7	2.0	2.3	AA	0017	1017-
20	3,300	30	0.060	0.027	1.0	10.0	3.7	4.3	5.0	AC	0018	1018-
20	18,000	30	0.012	0.0070	2.0	15.0	12.0	16.0	17.6	DC	0019	1019-
20	27,000	30	0.0060	0.0040	2.0	15.0	19.5	26.0	28.6	DF	0020	1020-
25	1,000	40	0.24	0.11	1.3	12.5	1.5	1.9	2.2	AA	0021	1021-
25	2,700	40	0.070	0.032	1.3	12.5	3.6	4.2	4.8	AC	0022	1022-
25	15,000	40	0.013	0.010	2.5	15.0	12.0	16.0	17.6	DC	0023	1023-
25	22,000	40	0.0070	0.0050	2.5	15.0	18.0	24.0	26.4	DF	0024	1024-
30	820	45	0.25	0.11	1.5	15.0	1.5	1.9	2.2	AA	0025	1025-
30	2,200	45	0.082	0.037	1.5	15.0	3.3	3.8	4.4	AC	0026	1026-
30	12,000	45	0.014	0.010	3.0	15.0	10.5	15.0	16.5	DC	0027	1027-
30	18,000	45	0.0090	0.0050	3.0	15.0	14.7	21.1	23.1	DF	0028	1028-
40	560	55	0.28	0.12	2.0	15.0	1.4	1.8	2.1	AA	0029	1029-
40	1,500	55	0.12	0.042	2.0	15.0	2.9	3.5	4.1	AC	0030	1030-
40	8,200	55	0.015	0.010	4.0	15.0	10.5	15.0	18.0	DC	0031	1031-
40	12,000	55	0.010	0.0060	4.0	15.0	14.0	20.0	24.0	DF	0032	1032-
50	470	60	0.30	0.14	2.5	15.0	1.3	1.6	1.9	AA	0033	1033-
50	1,000	60	0.18	0.047	2.5	15.0	2.6	3.2	3.8	AC	0034	1034-
50	6,800	60	0.018	0.010	5.0	15.0	9.1	13.0	16.9	DC	0035	1035-
50	10,000	60	0.012	0.0060	5.0	15.0	12.6	18.0	23.4	DF	0036	1036-

1/ Ripple current values shown are representive values not supported by test data.

2/ For ER style, complete dash number will include an addition letter symbol to indicate FR level (i.e. 1001M, 1010P etc.).

REQUIREMENTS:

Dimensions and configuration: See figure 1.

Case: Type - Tubular, insulated.

Weight (typical):

Case size	Oz.
AA - - -	3.8
AC - - -	4.5
DC - - -	21
DF - - -	28

DC rated voltage: See table I.

Reverse voltage: 1.5 volts maximum.

Capacitance (Cap.) value: See table I.

Cap. tolerance: +100 percent, -0 percent.

Operating temperature range:
-40° to +85°C.

DC leakage (DCL): See table I.

Equivalent series resistance (ESR): See table I.

Low temperature exposure: -40°C.
DCL - See table I.
Cap. - See table I.
ESR - See table I.

Terminal strength:
Method 211 of MIL-STD-202, test condition A with 5 lb weight applied.
Condition E. Torque - 8 pound-inches for case diameter of 1.375 inch; 15 pound-inches for other case diameters.

Stability at reduced and high temperatures:
Step 1 (at +25°C):
DCL - See table I.
Cap. - See table I.
ESR - See table I.
Step 2 (at -40°C):
Impedance - 200 times the value shown in table I.
ΔCap. - Within ±75 percent of step 1 value.
Step 3 (at +25°C):
DCL - See table I.
ΔCap. - Within ±5 percent of step 1 value.
ESR - See table I.
Step 4 (at +85°C):
DCL - See table I.
ΔCap. - Within ±30 percent of step 1 value.
ESR - See table I.
Step 5 (at +25°C):
DCL - See table I.
ΔCap. - Within ±5 percent of step 1 value.
ESR - See table I.

Life: Method 108 of MIL-STD-202.
For qualification: Condition F (2,000 hours) at 85°C.
DCL - See table I.
ΔCap. - Within ±25 percent of initial measured value.
ESR - Not more than 200 percent of initial requirement.

For quality conformance: Performance check, condition B (250 hours) at 85°C (non-ER).
DCL - See table I.
ΔCap. - Within ±10 percent of initial measured value.
ESR - See table I.
For quality conformance: Continuation test (1,750 hours) at 85°C (non-ER).
DCL - See table I.
ΔCap. - Within ±25 percent of initial measured value.
ESR - Not more than 200 percent of initial requirement.
For quality conformance: 10,000 hours (ER) at 85°C.
DCL - at 25°C initial limit, at 85°C 125 percent of initial limit.
ΔCap. - Within ±25 percent of initial measured value.
ESR - Not more than 200 percent of initial requirement.

Case insulation: In accordance with MIL-C-39018.

Shock (specified pulse):
Method 213 of MIL-STD-202, condition H.

Vibration:
Low frequency - Method 201 of MIL-STD-202.

Salt spray: Not applicable.

Thermal shock: Method 107 of MIL-STD-202, condition A (except low temperature shall be -40°C).

Surge voltage:
DCL - See table I.
ΔCap. - Within ±6 percent of initial measured value.
ESR - See table I.

Vent: In accordance with MIL-C-39018.

Moisture resistance:
Method 106 of MIL-STD-202.
DCL - See table I.
ΔCap. - Within ±6 percent of initial measured value.
ESR - See table I.
Case insulation - Shall meet initial requirement.

High temperature exposure: In accordance with MIL-C-39018, except duration of test shall be 100, -0 +5 hours. The high temperature shall be 85°C.

Reverse voltage aging: In accordance with MIL-C-39018.

Marking: In accordance with MIL-C-39018.
Part number: M39018/05- (dash number from table I).

APPLICATION AND OPERATION NOTES:

1. Shelf life. General shelf life expectancy for these capacitors is in excess of 3 years provided storage temperatures do not exceed 40°C. It is recommended that capacitors having more than 3 years storage be checked at room temperature for leakage current in accordance with the applicable requirement before being placed in service.

2. 10 kHz impedance. Measurements are made using a voltage divider network as shown in figure 2. The impedance value of the capacitor is then calculated from the ratio of the voltages across the known impedance and the unknown impedance as follows:

$$Z_X = \frac{R}{V_R} \cdot V_X$$

3. Inductance. Inductance is calculated from a high frequency impedance measurement using a circuit similar to that shown in figure 2, except that is is made at a frequency of 1 MHz. The inductance is calculated as follows:

$$X_L = \sqrt{Z^2 - R^2_{ESR}}$$

$$L = \frac{X_L}{2\pi f}$$

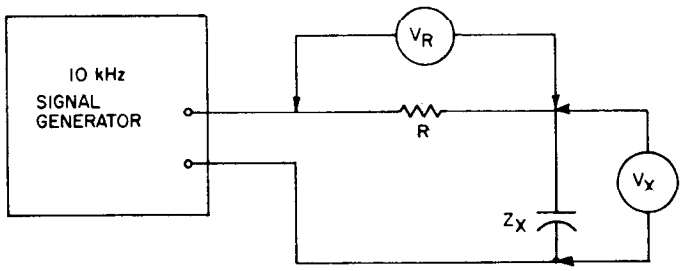

FIGURE 2. Voltage divider network.

Custodians:
Army - EL
Navy - EC
Air Force - 11

Review activities:
Army - EL
Navy - SH
Air Force - 11, 17, 99
DLA - ES

User activities:
Navy - CG, MC, AS, OS
Air Force - 19

Preparing activity:
Navy - EC

Agent:
DLA - ES

(Project 5910-1199-2)