INCH-POUND

MIL-C-39018/9B
7 January 1991
SUPERSEDING
MIL-C-39018/9A
14 September 1982

MILITARY SPECIFICATION SHEET

CAPACITORS, FIXED, ELECTROLYTIC (ALUMINUM OXIDE) (POLARIZED), ESTABLISHED RELIABILITY, STYLE CUR02 (INSULATED)

This specification is approved for use by all Departments and Agencies of the Department of Defense

The requirements for acquiring the product described herein shall consist of this specification sheet and the issue of the following specification listed in that issue of the Department of Defense Index of Specifications and Standards (DODISS) specified in the solicitation: MIL-C-39018.

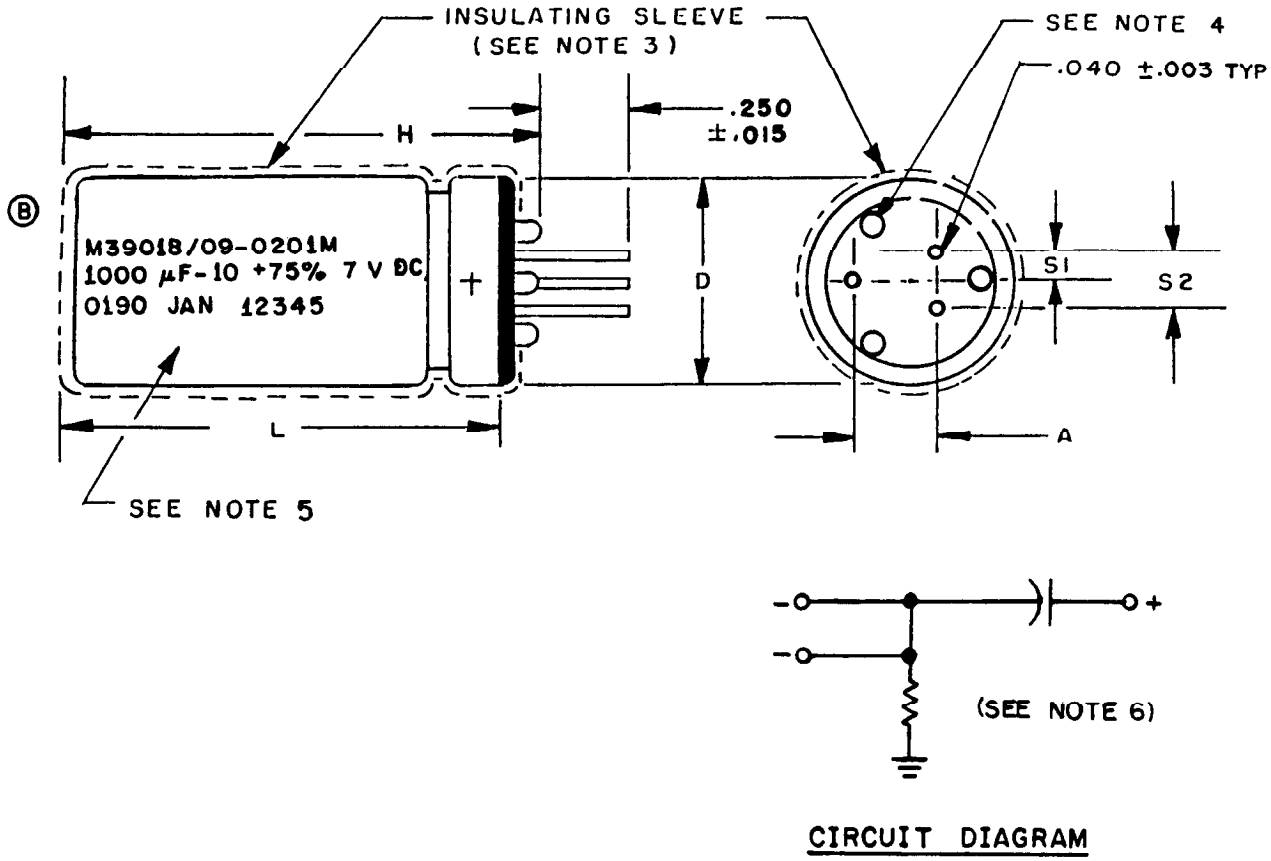

FIGURE 1. Style CUR02 insulated capacitors.

B denotes changes

DISTRIBUTION STATEMENT A. Approved for public release; distribution is unlimited.

Case size	Dimensions					
	L ±062	D ±.015	H max	A ±.015	S1 ±.015	S2 ±.015
A0	1.125	.750	1.246	.300	.100	.200
B0	1.625	.750	1.746	.300	.100	.200
C0	2.125	.750	2.246	.300	.100	.200
D0	2.625	.750	2.746	.300	.100	.200
E0	3.125	.750	3.246	.300	.100	.200
F0	3.625	.750	3.746	.300	.100	.200
A1	1.125	.875	1.246	.400	.150	.300
B1	1.625	.875	1.746	.400	.150	.300
C1	2.125	.875	2.246	.400	.150	.300
D1	2.625	.875	2.746	.400	.150	.300
E1	3.125	.875	3.246	.400	.150	.300
F1	3.625	.875	3.746	.400	.150	.300
A2	1.125	1.000	1.246	.400	.150	.300
B2	1.625	1.000	1.746	.400	.150	.300
C2	2.125	1.000	2.246	.400	.150	.300
D2	2.625	1.000	2.746	.400	.150	.300
E2	3.125	1.000	3.246	.400	.150	.300
F2	3.625	1.000	3.746	.400	.150	.300

Inches	mm
.003	0.08
.015	0.38
.040	1.02
.062	1.57
.100	2.54
.150	3.81
.200	5.08
.250	6.35
.300	7.62
.400	10.16
.750	19.05
.875	22.22
1.000	25.40
1.125	28.58
1.246	31.65
1.625	41.28
1.746	44.35
2.125	53.98
2.246	57.05
2.625	66.68
2.746	69.75
3.125	79.38
3.246	82.45
3.625	92.08
3.746	95.15

NOTES:
1. Dimensions are in inches.
2. Metric equivalents are for general information only.
3. Insulating sleeve thickness shall not exceed .008 (0.20 mm) and shall overlap the ends of the capacitor body.
4. Standoff shape is optional. The minimum height of the standoffs shall be .025 (0.64 mm).
5. Example of marking and its relative location on the capacitor body.
6. There is an indeterminate resistance between the metal case and the negative terminal.

FIGURE 1. Style CUR02 insulated capacitors - Continued.

REQUIREMENTS:

Dimensions and configuration: See figure 1.

Case:

Type - Tubular.

Material - Metal.

Terminals: See figure 1.

DC rated voltage: See table I.

Reverse voltage: 1.5 volts maximum.

Capacitance: See table I.

Cap. tolerance: -10, +50 percent or -10, +75 percent. See table I.

Failure rate level: M, P, R, and S.

Operating temperature range: -55°C to +105°C.

DC leakage (DCL): See table I.

Equivalent series resistance (ESR): See table I.

Low temperature exposure:

DCL - See table I.
Cap. - See table I.
ESR - See table I.

Terminal strength: Method 211, MIL-STD-202, test conditions A (3 pounds) and D (3 rotations).

Stability at reduced and high temperatures:

(B) Step 1 (at +25°C):

DCL - See table I.
Cap. - See table I.
ESR - (at 120 Hz) See table I.

Step 2 (at -55°C):

Impedance - See table I.

ΔCap. - Shall not exceed the following percentages of the step 1 value:

7 V dc: ±35 percent.
10 to 30 V dc, inclusive: ±25 percent.
50 to 100 V dc, inclusive: ±20 percent.
150 to 250 V dc, inclusive: ±30 percent.

(B) Step 3 (at +25°C):

DCL - See table I.
ΔCap. - Shall not exceed ±5 percent of step 1 value.
ESR - (at 120 Hz) See table I.

TABLE I. Style CUR02 capacitors.

DC rated voltage at +85° and +105°C	Nominal capacitance	DC surge voltage at +85°C and +105°C	Equivalent series resistance at +25°C (max)		Maximum impedance at -55°C (100 kHz)	Maximum impedance at +25°C (100 kHz)	Maximum dc leakage		Maximum ac ripple current at +85°C (20 - 100 kHz)	Case size	Dash number 1/ Capacitance tolerance	
			120 Hz	20 kHz			+25°C	+105°C			-10 +50	-10 +75
Volts	µF	Volts	Ohms		Ohms	Ohms	µA		Amperes			
7	1,000	10	.142	.078	.632	.079	41	250	2.10	A0	0001-	0201-
7	2,200	10	.067	.038	.328	.041	62	372	3.33	B0	0002-	0202-
7	3,300	10	.045	.026	.248	.031	75	455	4.65	C0	0003-	0203-
7	4,700	10	.032	.024	.224	.028	90	544	5.86	D0	0004-	0204-
7	5,600	10	.027	.019	.192	.024	98	593	6.66	E0	0005-	0205-
7	6,800	10	.023	.016	.168	.021	109	654	7.60	F0	0006-	0206-
7	1,800	10	.086	.051	.424	.053	56	336	2.86	A1	0007-	0207-
7	3,900	10	.042	.026	.240	.030	82	495	4.63	B1	0008-	0208-
7	5,600	10	.030	.019	.192	.024	98	593	6.07	C1	0009-	0209-
7	6,800	10	.025	.016	.176	.022	109	654	7.21	D1	0010-	0210-
7	8,200	10	.021	.014	.168	.021	119	718	8.34	E1	0011-	0211-
7	10,000	10	.017	.013	.160	.020	132	793	8.93	F1	0012-	0212-
7	2,700	10	.066	.042	.360	.045	68	412	3.41	A2	0013-	0213-
7	4,700	10	.037	.024	.224	.028	90	544	4.63	B2	0014-	0214-
7	6,800	10	.029	.019	.200	.025	109	654	6.86	C2	0015-	0215-
7	10,000	10	.020	.013	.168	.021	132	793	8.42	D2	0016-	0216-
7	12,000	10	.017	.012	.160	.020	144	869	9.77	E2	0017-	0217-
7	15,000	10	.014	.011	.152	.019	162	972	11.11	F2	0018-	0218-
10	820	15	.170	.079	.632	.079	45	270	2.09	A0	0019-	0219-
10	1,800	15	.084	.051	.424	.053	67	402	2.99	B0	0020-	0210-
10	2,700	15	.065	.031	.272	.034	82	492	4.29	C0	0021-	0221-
10	3,300	15	.046	.030	.256	.032	90	544	4.78	D0	0022-	0222-
10	5,600	15	.032	.019	.176	.022	118	709	6.95	F0	0023-	0223-
10	1,500	15	.120	.058	.480	.060	61	367	2.68	A1	0024-	0224-
10	2,700	15	.056	.029	.264	.033	82	492	4.36	B1	0025-	0225-
10	5,600	15	.032	.018	.184	.023	118	709	6.74	D1	0026-	0226-
10	6,800	15	.024	.017	.168	.021	130	782	7.48	E1	0027-	0227-
10	8,200	15	.021	.015	.152	.019	143	859	8.51	F1	0028-	0228-
10	1,800	15	.090	.046	.392	.049	67	402	3.28	A2	0029-	0229-
10	3,900	15	.047	.026	.240	.030	98	592	5.00	B2	0030-	0230-
10	5,600	15	.030	.017	.184	.023	118	709	6.86	C2	0031-	0231-
10	12,000	15	.018	.011	.152	.019	173	1039	10.80	F2	0032-	0232-

See footnote at end of table.

TABLE I. Style CUR02 capacitors - Continued.

DC rated voltage at +85° and +105°C	Nominal capacitance	DC surge voltage at +85°C and +105°C	Equivalent series resistance at +25°C (max)		Maximum impedance at -55°C (100 kHz)	Maximum impedance at +25°C (100 kHz)	Maximum dc leakage		Maximum ac ripple current at +85°C (20 - 100 kHz)	Case size	Dash number 1/ Capacitance tolerance	
			120 Hz	20 kHz			+25°C	+105°C			-10 +50	-10 +75
Volts	µF	Volts	Ohms		Ohms	Ohms	µA		Amperes			
15	680	20	.186	.079	.632	.079	50	300	2.09	A0	0033-	0233-
15	1,500	20	.085	.049	.392	.049	75	450	3.15	B0	0034-	0234-
15	1,800	20	.070	.031	.272	.034	82	492	4.28	C0	0035-	0235-
15	2,700	20	.047	.025	.216	.027	100	600	5.64	D0	0036-	0236-
15	3,900	20	.033	.020	.184	.023	121	726	6.48	E0	0037-	0237-
15	4,700	20	.031	.016	.168	.021	133	798	7.47	F0	0038-	0238-
15	1,200	20	.114	.053	.432	.054	67	402	2.82	A1	0039-	0239-
15	2,200	20	.062	.029	.264	.033	91	546	4.37	B1	0040-	0240-
15	3,900	20	.037	.019	.192	.024	121	726	5.98	C1	0041-	0241-
15	4,700	20	.031	.018	.184	.023	133	798	6.75	D1	0042-	0242-
15	5,600	20	.026	.014	.168	.021	145	870	8.37	E1	0043-	0243-
15	6,800	20	.023	.013	.160	.020	160	960	9.09	F1	0044-	0244-
15	1,500	20	.097	.046	.392	.049	75	450	3.27	A2	0045-	0245-
15	3,300	20	.046	.024	.224	.028	111	666	5.20	B2	0046-	0246-
15	4,700	20	.033	.018	.192	.024	133	798	6.75	C2	0047-	0247-
15	6,800	20	.025	.014	.168	.021	160	960	8.38	D2	0048-	0248-
15	8,200	20	.021	.012	.160	.020	175	1050	9.61	E2	0049-	0249-
15	10,000	20	.018	.010	.152	.019	194	1164	11.03	F2	0050-	0250-
30	330	40	.238	.071	.568	.071	49	298	2.20	A0	0051-	0251-
30	680	40	.139	.057	.464	.058	71	428	2.83	B0	0052-	0252-
30	1,000	40	.089	.030	.264	.033	86	516	4.37	C0	0053-	0253-
30	1,200	40	.074	.029	.248	.031	94	569	4.86	D0	0054-	0254-
30	1,800	40	.054	.027	.232	.029	116	697	5.44	E0	0055-	0255-
30	2,200	40	.046	.024	.208	.026	128	770	6.18	F0	0056-	0256-
30	560	40	.149	.057	.464	.058	69	388	2.70	A1	0057-	0257-
30	1,200	40	.075	.030	.264	.033	94	569	4.28	B1	0058-	0258-
30	1,500	40	.055	.025	.240	.030	106	697	5.23	C1	0059-	0259-
30	2,200	40	.048	.022	.216	.027	128	770	6.09	D1	0060-	0260-
30	2,700	40	.035	.017	.176	.022	142	853	7.48	E1	0061-	0261-
30	3,300	40	.029	.015	.152	.019	157	942	8.51	F1	0062-	0262-
30	820	40	.120	.046	.376	.047	78	470	3.28	A2	0063-	0263-
30	1,500	40	.060	.025	.232	.029	106	636	5.09	B2	0064-	0264-
30	2,200	40	.042	.018	.192	.024	128	770	6.67	C2	0065-	0265-
30	3,300	40	.033	.014	.168	.021	157	942	8.25	D2	0066-	0266-
30	3,900	40	.027	.013	.160	.020	171	1026	9.18	E2	0067-	0267-
30	4,700	40	.024	.011	.152	.019	187	1126	10.71	F2	0068-	0268-

See footnote at end of table.

TABLE I. Style CUR02 capacitors - Continued.

DC rated voltage at +85° and +105°C	Nominal capacitance	DC surge voltage at +85°C and +105°C	Equivalent series resistance at +25°C (max)		Maximum impedance at -55°C (100 kHz)	Maximum impedance at +25°C (100 kHz)	Maximum dc leakage		Maximum ac ripple current at +85°C (20 - 100 kHz)	Case size	Dash number 1/ Capacitance tolerance	
			120 Hz	20 kHz			+25°C	+105°C			-10 +50	-10 +75
Volts	µF	Volts	Ohms		Ohms	Ohms	µA		Amperes			
50	180	75	.36	.079	.632	.079	47	282	2.08	A0	0069-	0269-
50	390	75	.166	.039	.328	.041	70	420	3.42	B0	0070-	0270-
50	560	75	.118	.028	.256	.032	84	504	4.52	C0	0071-	0271-
50	820	75	.082	.021	.200	.025	101	606	5.67	D0	0072-	0272-
50	1,000	75	.068	.018	.176	.022	112	672	6.84	E0	0073-	0273-
50	1,200	75	.059	.014	.160	.020	122	732	8.01	F0	0074-	0274-
50	330	75	.214	.053	.432	.054	64	384	2.79	A1	0075-	0275-
50	680	75	.102	.029	.248	.031	92	552	4.50	B1	0076-	0276-
50	1,000	75	.069	.019	.200	.025	112	672	5.98	C1	0077-	0277-
50	1,200	75	.060	.017	.184	.023	122	732	6.57	D1	0078-	0278-
50	1,500	75	.050	.016	.168	.021	137	822	7.27	E1	0079-	0279-
50	1,800	75	.042	.012	.160	.020	150	900	8.01	F1	0080-	0280-
50	470	75	.158	.045	.368	.046	77	462	3.33	A2	0081-	0281-
50	820	75	.086	.025	.232	.029	101	606	5.12	B2	0082-	0282-
50	1,200	75	.060	.018	.192	.024	122	732	6.75	C2	0083-	0283-
50	1,800	75	.042	.015	.168	.021	150	900	8.38	D2	0084-	0284-
50	2,200	75	.034	.013	.160	.020	166	996	9.54	E2	0085-	0285-
50	2,700	75	.024	.011	.152	.019	184	1104	10.62	F2	0086-	0286-
75	82	100	1.199	.350	5.370	.358	39	234	0.97	A0	0087-	0287-
75	180	100	.502	.160	2.450	.163	58	348	1.66	B0	0088-	0288-
75	270	100	.333	.110	1.650	.110	71	426	1.31	C0	0089-	0289-
75	330	100	.270	.089	1.350	.090	79	474	2.75	D0	0090-	0290-
75	390	100	.229	.076	1.150	.077	86	516	3.22	E0	0091-	0291-
75	470	100	.200	.063	.960	.064	94	564	3.79	F0	0092-	0292-
75	150	100	.646	.210	3.170	.211	53	318	1.40	A1	0093-	0293-
75	270	100	.360	.118	1.790	.119	71	426	2.15	B1	0094-	0294-
75	390	100	.240	.082	1.250	.083	86	516	2.87	C1	0095-	0295-
75	560	100	.169	.062	.960	.064	102	612	3.57	D1	0096-	0296-
75	680	100	.138	.050	.780	.052	113	678	4.46	E1	0097-	0297-
75	820	100	.115	.042	.630	.042	124	744	4.97	F1	0098-	0298-
75	180	100	.444	.150	2.250	.150	58	348	1.81	A2	0099-	0299-
75	390	100	.365	.120	1.820	.121	86	516	2.30	B2	0100-	0300-
75	560	100	.164	.057	.870	.058	102	612	3.73	C2	0101-	0301-
75	680	100	.116	.042	.660	.044	113	678	4.79	D2	0102-	0302-
75	1,000	100	.095	.035	.570	.038	137	822	5.61	E2	0103-	0303-
75	1,200	100	.080	.030	.495	.033	150	900	6.53	F2	0104-	0304-

See footnote at end of table.

TABLE I. Style CUR02 capacitors - Continued.

DC rated voltage at +85° and +105°C	Nominal capacitance	DC surge voltage at +85°C and +105°C	Equivalent series resistance at +25°C (max)		Maximum impedance at -55°C (100 kHz)	Maximum impedance at +25°C (100 kHz)	Maximum dc leakage		Maximum ac ripple current at +85°C (20 - 100 kHz)	Case size	Dash number 1/ Capacitance tolerance	
			120 Hz	20 kHz			+25°C	+105°C			-10 +50	-10 +75
Volts	µF	Volts	Ohms		Ohms	Ohms	µA		Amperes			
100	39	125	1.963	.360	5.400	.360	32	192	0.95	A0	0105-	0305-
100	82	125	.952	.170	2.660	.177	45	270	1.58	B0	0106-	0306-
100	120	125	.665	.130	2.000	.133	55	330	1.98	C0	0107-	0307-
100	150	125	.513	.090	1.460	.097	61	366	2.61	D0	0108-	0308-
100	220	125	.370	.070	1.080	.072	74	444	3.33	E0	0109-	0309-
100	270	125	.310	.058	.900	.060	82	492	3.91	F0	0110-	0310-
100	68	125	1.183	.220	3.320	.221	41	246	1.34	A1	0111-	0311-
100	120	125	.638	.120	1.820	.121	55	330	2.10	B1	0112-	0312-
100	220	125	.346	.068	1.04	.069	74	444	3.12	C1	0113-	0313-
100	270	125	.300	.057	.885	.059	82	492	3.72	D1	0114-	0314-
100	330	125	.248	.046	.735	.049	91	546	4.40	E1	0115-	0315-
100	390	125	.210	.040	.630	.042	99	594	5.09	F1	0116-	0316-
100	100	125	.795	.150	2.310	.154	50	300	1.76	A2	0117-	0317-
100	180	125	.429	.084	1.260	.084	67	402	2.73	B2	0118-	0318-
100	270	125	.284	.057	.885	.059	82	492	3.69	C2	0119-	0319-
100	390	125	.199	.042	.660	.044	99	594	4.74	D2	0120-	0320-
100	470	125	.165	.036	.570	.038	108	648	5.58	E2	0121-	0321-
100	560	125	.138	.030	.495	.033	118	708	6.45	F2	0122-	0322-
150	27	175	3.24	.820	20.60	.822	32	192	0.64	A0	0123-	0323-
150	56	175	1.828	.414	11.60	.465	46	276	1.01	B0	0124-	0324-
150	82	175	1.207	.300	7.70	.308	56	336	1.34	C0	0125-	0325-
150	120	175	.83	.200	5.25	.210	67	402	1.80	D0	0126-	0326-
150	150	175	.66	.155	4.20	.168	75	450	2.18	E0	0127-	0327-
150	180	175	.55	.130	3.48	.139	82	492	2.57	F0	0128-	0328-
150	39	175	2.162	.550	13.80	.553	39	234	0.86	A1	0129-	0329-
150	82	175	1.049	.265	6.75	.270	56	336	1.40	B1	0130-	0330-
150	120	175	.693	.175	4.50	.180	67	402	1.93	C1	0131-	0331-
150	180	175	.475	.125	3.35	.134	82	492	2.47	D1	0132-	0332-
150	220	175	.386	.100	2.75	.110	91	546	2.93	E1	0133-	0333-
150	270	175	.315	.085	2.25	.090	101	606	3.47	F1	0134-	0334-
150	56	175	1.571	.400	10.20	.406	46	276	1.09	A2	0135-	0335-
150	120	175	.849	.215	5.53	.221	67	402	1.69	B2	0136-	0336-
150	180	175	.562	.140	3.68	.147	82	492	2.30	C2	0137-	0337-
150	220	175	.378	.097	2.53	.101	91	546	3.06	D2	0138-	0338-
150	270	175	.312	.080	2.13	.085	101	606	3.78	E2	0139-	0339-
150	330	175	.251	.060	1.73	.069	111	666	4.50	F2	0140-	0340-

See footnote at end of table.

TABLE I. Style CUR02 capacitors - Continued.

DC rated voltage at +85° and +105°C	Nominal capacitance	DC surge voltage at +85°C and +105°C	Equivalent series resistance at +25°C (max)		Maximum impedance at -55°C (100 kHz)	Maximum impedance at +25°C (100 kHz)	Maximum dc leakage		Maximum ac ripple current at +85°C (20 - 100 kHz)	Case size	Dash number 1/ Capacitance tolerance	
			120 Hz	20 kHz			+25°C	+105°C			-10 +50	-10 +75
Volts	µF	Volts	Ohms		Ohms	Ohms	µA		Amperes			
200	18	225	4.485	.880	22.20	.886	30	180	0.61	A0	0141-	0341-
200	39	225	2.018	.395	10.00	.400	44	264	1.04	B0	0142-	0342-
200	56	225	1.553	.300	7.73	.309	53	318	1.33	C0	0143-	0343-
200	82	225	.980	.210	5.50	.220	64	384	1.76	D0	0144-	0344-
200	100	225	.081	.170	4.50	.180	71	426	2.10	E0	0145-	0345-
200	120	225	.670	.140	3.75	.150	78	468	2.48	F0	0146-	0346-
200	27	225	2.920	.575	14.50	.581	37	222	0.82	A1	0147-	0347-
200	56	225	1.348	.265	6.75	.270	53	318	1.40	B1	0148-	0348-
200	82	225	.934	.180	4.73	.189	64	384	1.87	C1	0149-	0349-
200	120	225	.775	.150	3.93	.157	78	468	2.24	D1	0150-	0350-
200	150	225	.566	.120	3.18	.127	87	522	2.74	E1	0151-	0351-
200	180	225	.450	.098	2.55	.102	95	570	3.26	F1	0152-	0352-
200	47	225	1.850	.370	9.28	.371	49	294	1.15	A2	0153-	0353-
200	82	225	1.134	.220	5.73	.229	64	384	1.64	B2	0154-	0354-
200	120	225	.647	.130	3.35	.134	78	468	2.41	C2	0155-	0355-
200	150	225	.501	.100	2.60	.104	87	522	3.08	D2	0156-	0356-
200	180	225	.430	.087	2.25	.074	95	570	3.54	E2	0157-	0357-
200	220	225	.346	.070	1.85	.074	105	630	4.23	F2	0158-	0358-
250	15	275	5.469	.880	22.20	.887	31	186	0.60	A0	0159-	0359-
250	27	275	2.868	.460	11.70	.467	41	246	0.96	B0	0160-	0360-
250	47	275	1.624	.260	6.65	.266	54	324	1.43	C0	0161-	0361-
250	56	275	1.414	.230	5.80	.232	59	354	1.67	D0	0162-	0362-
250	68	275	1.2	.205	5.25	.210	65	390	1.94	E0	0163-	0363-
250	100	275	.83	.135	3.50	.140	79	474	2.57	F0	0164-	0364-
250	22	275	3.746	.610	15.30	.611	37	222	0.81	A1	0165-	0365-
250	47	275	2.027	.330	8.30	.332	54	324	1.26	B1	0166-	0366-
250	68	275	1.138	.185	4.73	.189	65	390	1.85	C1	0167-	0367-
250	100	275	.944	.155	3.95	.158	79	474	2.23	D1	0168-	0368-
250	120	275	.733	.130	3.30	.132	86	516	2.68	E1	0169-	0369-
250	150	275	.587	.100	2.65	.106	97	582	3.24	F1	0170-	0370-
250	33	275	2.461	.400	10.20	.408	45	270	1.08	A2	0171-	0371-
250	68	275	1.20	.195	5.00	.200	65	390	1.80	B2	0172-	0372-
250	100	275	.78	.128	3.25	.13	79	474	2.66	C2	0173-	0373-
250	120	275	.632	.103	2.70	.108	86	516	2.92	D2	0174-	0374-
250	150	275	.524	.087	2.25	.090	97	582	3.44	E2	0175-	0375-
250	180	275	.437	.074	1.90	.076	106	636	4.01	F2	0176-	0376-

Ⓑ 1/ Complete PIN shall include a letter symbol to indicate failure rate level (i.e., 0001M, 0026R, etc.). For parts with random vibration, the letter R shall be used in place of the dash (i.e., M39018/09R0001M).

Ⓑ Step 4 (at +105°C):

DCL - See table I.
ΔCap. - Shall not exceed ±30 percent of step 1 value.

Ⓑ Step 5 (at +25°C):

DCL - See table I.
ΔCap. - Shall not exceed ±5 percent of step 1 value.
ESR - (at 120 Hz) See table I.

Ⓑ Life: Method 108, MIL-STD-202.

For qualification: Condition F (2,000 hours) at +85°C.

DCL - See table I.
ΔCap. - Shall not exceed ±15 percent of initial measured value.
ESR - Not more than 150 percent of initial requirement.

10,000 hour (extended life and group C) at +85°C.

DCL - At +25°C, initial limit; at +85°C, 125 percent of initial limit.
ΔCap. - Shall not exceed ±25 percent of initial measured value.
ESR - Not more than 200 percent of initial requirement.

Vibration:

High frequency - Method 204, MIL-STD-202, test condition A.

Ⓑ Random (when applicable) - In accordance with MIL-C-39018.

Thermal shock and immersion:

Ⓑ Thermal shock: Method 107, MIL-STD-202, condition A, except that in step 3, units shall be tested at applicable high temperature.

Immersion: Method 104, MIL-STD-202, condition B (2 cycles, 30 minutes).

DCL - See table I.
ΔCap. - Shall not exceed ±5 percent of initial measured value.
ESR - See table I.
Case insulation - Shall meet initial requirements.

Ⓑ Surge voltage:

DCL - See table I.
ΔCap. - Shall not exceed ±12 percent of initial measured value.
ESR - See table I.

Moisture resistance: Method 106, MIL-STD-202.

DCL - See table I.
ΔCap. - Shall not exceed ±6 percent of initial measured value.
ESR - See table I.
Case insulation - Shall meet initial requirements.

High temperature exposure (500 hours at +105°C):

DCL - Not more than 200 percent of initial requirement.
ΔCap. - Shall not exceed ±10 percent of initial measured value.
ESR - Not more than 115 percent of initial requirement.

Penetration of solvents: In accordance with MIL-C-39018.

Ⓑ High temperature verification: In accordance with MIL-C-39018 at +105°C with rated voltage applied.

DCL - See table I.
ΔCap. - Shall not exceed ±15 percent of initial measured value.
ESR - Not more than 150 percent of initial requirement.

Reverse voltage aging: In accordance with MIL-C-39018.

Marking: In accordance with MIL-C-39018.

Ⓑ Part or Identifying Number (PIN): M39018/09- (dash number from table I). For parts with random vibration, the letter R shall be used in place of the dash (i.e., M39018/09R0001M).

APPLICATION NOTES:

1. Ripple current: Capacitors shall withstand the rms ripple current at 20 kHz through 100 kHz as given in table I.

The maximum ripple current values apply with the following qualifications:

The sum of the applied dc voltage plus the peak value of the impressed ac voltage shall not exceed the dc rated voltage of the capacitor.

The sum of the applied dc voltage plus the peak value of the impressed ac voltage shall be such that not more than 1.5 volt reversal is experienced by the capacitor.

If capacitors are operated at a frequency less than 20 kHz, the rated 20 kHz rms ripple current shall be multiplied by the factors in table II.

TABLE II. Factors for determining ripple current at various frequencies.

Rated voltage	Frequency (in Hertz)				
	60	120	400	1 k - 19 k	20 k - 100 k
7 - 75	.60	.75	.80	.90	1.0
100 - 250	.43	.54	.75	.85	1.0

Where capacitors are operated at a temperature other than +85°C, the permissible rms ripple current shall be multiplied by the factors in table III.

Ⓑ TABLE III. Factors for determining ripple current at various temperatures.

Ambient temperature	Factor
+105°C	0.3
+ 85°C	1.0
+ 65°C	1.4
+ 45°C	1.7
+ 25°C	2.0

When capacitors are operated at both a temperature and frequency other than +85°C and less than 20 kHz, respectively, both the multiplying factors described in tables II and III shall be used to obtain the permissible rms ripple current.

Under no conditions of temperature or frequency, regardless of the multipliers given above, should the rms ripple current exceed 20 amperes.

2. Insulation and grounding: These capacitors possess an indeterminate insulation resistance between the cathode terminal and the case. Where a potential difference exists between the cathode terminal and the chassis or other metallic mounting surfaces (which are usually at ground potential), the capacitors should be mounted in such a manner as to insulate the container from such mounting surfaces.

3. Operating life: These capacitors are expected to have a useful operating life in excess of 10 years when subjected to typical circuit environments and operating conditions. Life can be extended by derating with regard to environmental and electrical requirements.

Ⓑ 4. Shelf life: Shelf life and reforming procedures shall be in accordance with MIL-STD-1131.

CONCLUDING MATERIAL

Custodians:
Army - ER
Navy - EC
Air Force - 85

Review activities:
Navy - SH
Air Force - 17, 99
DLA - ES

User activities:
Navy - AS, CG, MC, OS
Air Force - 19

Preparing activity:
Navy - EC

Agent:
DLA - ES

(Project 5910-1688-9)