INCH-POUND

MIL-PRF-39018/7A
12 December 2001
SUPERSEDING
MIL-PRF-39018/7
23 March 1978

PERFORMANCE SPECIFICATION SHEET

CAPACITORS, FIXED, ELECTROLYTIC (ALUMINUM OXIDE) (POLARIZED), (FOUR-TERMINAL), ESTABLISHED RELIABILITY STYLE CUR19 (INSULATED)

This specification is approved for use by all Departments and Agencies of the Department of Defense.

The requirements for acquiring the product described herein shall consist of this specification sheet and MIL-PRF-39018.

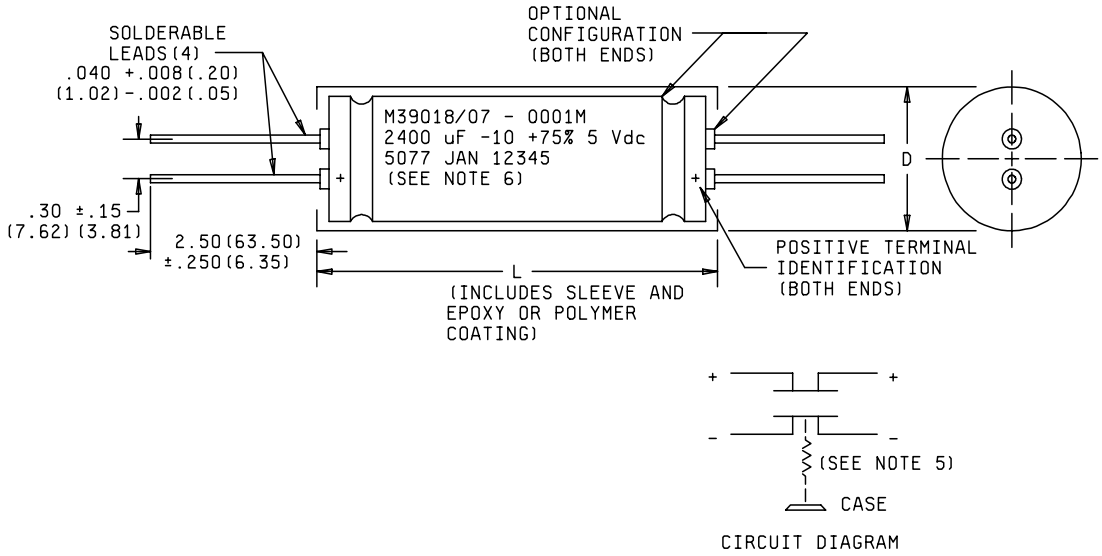

NOTES:
1. Dimensions are in inches.
2. Metric equivalents are given for general information only and are based upon 1.00 = 25.4 mm.
3. Metric equivalents are in parentheses.
4. These capacitors are not intended to be mounted by their leads.
5. There is an indeterminate resistance between the metal case and the negative terminals.
6. Example of marking and its relative location on the capacitor body

FIGURE 1. Style CUR19 capacitors.

DISTRIBUTION STATEMENT A. Approved for public release; distribution is unlimited.

Case size	INSULATED DIMENSIONS INCHES			Typical weight (GRAMS)
	L			
	Min	Max	Max. Dia	
H1	1.625	1.843	.785	20.3
H2	2.125	2.343	.785	26.8
H3	2.625	2.843	.785	33.2
H4	3.125	3.343	.785	39.7
H5	3.625	3.843	.785	45.9
J1	1.625	1.843	.910	26.9
J2	2.125	2.343	.910	36.2
J3	2.625	2.843	.910	45.4
J4	3.125	3.343	.910	55.0
J5	3.625	3.843	.910	64.0
K1	1.625	1.843	1.035	34.3
K2	2.125	2.343	1.035	45.9
K3	2.625	2.843	1.035	57.2
K4	3.125	3.343	1.035	68.5
K5	3.625	3.843	1.035	81.9

Inches	mm
.002	.05
.008	.20
.015	.38
.040	1.02
.625	15.88
.785	19.94
.910	23.11
1.035	26.29
1.625	41.28
1.843	46.81
2.125	53.98
2.343	59.51
2.625	66.68
2.843	72.21
3.125	79.38
3.343	84.91
3.625	92.08
3.843	97.61

FIGURE 1. Styles CUR19 capacitors - Continued.

TABLE I. Style CUR19 capacitors.

DC rated voltage @ 105°C	Capacitance	DC surge voltage	ESR (max) 120Hz, 25°C	Impedance (max) 25°C 10 kHz 1MHz	DC leakage		RMS ripple current 1/ 10°C rise 10kHz-1MHz	Case size	Dash number 2/	
					25°C	85°C & 105°C			Low Frequency vibration	High frequency vibration
Volts	µF	Volts	Ohms	Ohms	mA	Amps				
5	2,400	7	0.146	0.110	55	330	1.50	H 1	0001-	0201-
5	3,300	7	0.106	0.080	64	390	1.80	H 2	0002-	0202-
5	3,700	7	0.095	0.071	68	410	1.90	J 1	0003-	0203-
5	4.400	7	0.080	0.060	74	440	2.50	H 3	0004-	0204-
5	5,000	7	0.070	0.053	80	480	2.50	J 2	0005-	0205-
5	5,700	7	0.062	0.047	85	510	3.10	H 4	0006-	0206-
5	6,700	7	0.052	0.039	92	550	3.20	J 3	0007-	0207-
5	7,200	7	0.049	0.037	95	570	3.50	K 2	0008-	0208-
5	8,800	7	0.040	0.030	105	630	4.00	J 4	0009-	0209-
5	10,000	7	0.035	0.026	112	670	4.60	K 3	0010-	0210-
5	13,000	7	0.027	0.020	128	770	5.60	K 4	0011-	0211-
5	16,000	7	0.022	0.017	142	850	7.00	K 5	0012-	0212-
7.5	2,000	10	0.175	0.130	61	370	1.40	H 1	0013-	0213-
7.5	3,000	10	0.117	0.087	75	450	1.80	J 1	0014-	0214-
7.5	3,800	10	0.093	0.070	85	510	2.40	H 3	0015-	0215-
7.5	4,400	10	0.080	0.059	91	550	2.40	J 2	0016-	0216-
7.5	4,800	10	0.073	0.055	95	570	2.40	K 1	0017-	0217-
7.5	5,000	10	0.070	0.053	97	580	3.00	H 4	0018-	0218-
7.5	5,800	10	0.061	0.046	105	630	3.10	J 3	0019-	0219-
7.5	6,200	10	0.057	0.043	108	650	3.30	K 2	0020-	0220-
7.5	7,500	10	0.047	0.035	119	710	3.80	J 4	0021-	0221-
7.5	9,000	10	0.039	0.029	130	780	4.40	K 3	0022-	0222-
7.5	11,000	10	0.032	0.024	144	860	5.30	K 4	0023-	0223-
7.5	14,000	10	0.025	0.019	162	970	6.60	K 5	0024-	0224-
10	1,700	15	0.195	0.144	65	390	1.30	H 1	0025-	0225-
10	2,300	15	0.144	0.107	76	460	1.70	H 2	0026-	0226-
10	2,600	15	0.127	0.094	81	490	1.70	J 1	0027-	0227-
10	3,000	15	0.110	0.082	87	520	2.20	H 3	0028-	0228-
10	3,600	15	0.092	0.068	95	570	2.20	J 2	0029-	0229-
10	4,100	15	0.081	0.060	101	605	2.80	H 4	0030-	0230-
10	4,800	15	0.069	0.051	110	660	2.90	J 3	0031-	0231-
10	5,100	15	0.065	0.048	113	680	3.20	K 2	0032-	0232-
10	6,300	15	0.053	0.039	126	760	3.60	J 4	0033-	0233-
10	7,500	15	0.044	0.033	137	820	4.10	K 3	0034-	0234-
10	9,700	15	0.034	0.025	156	940	5.00	K 4	0035-	0235-
10	12,000	15	0.028	0.021	173	1,040	6.20	K 5	0036-	0236-
16	1,400	20	0.207	0.149	75	450	1.20	H 1	0037-	0237-
16	1,900	20	0.153	0.110	87	520	1.60	H 2	0038-	0238-
16	2,100	20	0.138	0.100	92	550	1.60	J 1	0039-	0239-
16	2,700	20	0.107	0.077	104	620	2.00	J 2	0040-	0240-

See footnotes at end of table.

TABLE I. Style CUR19 capacitors - Continued.

DC rated voltage @ 105°C	Capacitance	DC surge voltage	ESR (max) 120Hz, 25°C	Impedance (max) 25°C 10 kHz 1MHz	DC leakage (max)		RMS ripple current 1/ 10°C rise 10 kHz-1MHz	Case size	Dash number 2/	
					25°C	85°C & 105°C			Low frequency vibration	High frequency vibration
Volts	µF	Volts	Ohms	Ohms	mA	Amps				
16	3,400	20	0.085	0.061	117	700	2.60	H 4	0041-	0241-
16	4,200	20	0.069	0.050	130	780	2.90	K 2	0042-	0242-
16	5,200	20	0.056	0.041	144	860	3.30	J 4	0043-	0243-
16	6,100	20	0.048	0.035	156	940	3.90	K 3	0044-	0244-
16	6,400	20	0.046	0.033	162	970	4.10	J 5	0045-	0245-
16	8,000	20	0.036	0.026	179	1,070	4.70	K 4	0046-	0246-
16	10,000	20	0.029	0.021	200	1,200	5.90	K 5	0047-	0247-
20	1,200	25	0.240	0.170	78	470	1.20	H 1	0048-	0248-
20	1,800	25	0.160	0.110	95	570	1.50	J 1	0049-	0249-
20	2,200	25	0.132	0.092	105	630	2.00	H 3	0050-	0250-
20	2,400	25	0.120	0.084	110	660	1.90	J 2	0051-	0251-
20	2,900	25	0.100	0.070	120	720	2.50	H 4	0052-	0252-
20	3,400	25	0.085	0.060	130	780	2.60	J 3	0053-	0253-
20	3,700	25	0.078	0.055	136	820	2.70	K 2	0054-	0254-
20	4,500	25	0.064	0.045	150	900	3.30	J 4	0055-	0255-
20	5,300	25	0.055	0.039	163	980	3.50	K 3	0056-	0256-
20	7,000	25	0.042	0.030	187	1,120	4.50	K 4	0057-	0257-
20	8,600	25	0.034	0.024	204	1,220	5.50	K 5	0058-	0258-
25	900	30	0.320	0.224	75	450	1.05	H 1	0059-	0259-
25	1,200	30	0.240	0.168	87	520	1.40	H 2	0060-	0260-
25	1,600	30	0.180	0.126	100	600	1.75	H 3	0061-	0261-
25	2,000	30	0.145	0.102	111	670	1.90	J 2	0062-	0262-
25	2,500	30	0.116	0.081	125	750	2.40	K 2	0063-	0263-
25	2,800	30	0.103	0.072	132	790	3.00	J 3	0064-	0264-
25	3,600	30	0.080	0.056	150	900	3.25	K 3	0065-	0265-
25	4,700	30	0.062	0.043	171	1,030	4.00	K 4	0066-	0266-
25	5,700	30	0.051	0.036	189	1,130	4.65	K 5	0067-	0267-
30	700	40	0.380	0.262	72	430	1.00	H 1	0068-	0268-
30	900	40	0.295	0.204	82	490	1.25	H 2	0069-	0269-
30	1,300	40	0.204	0.141	99	590	1.70	H 3	0070-	0270-
30	1,600	40	0.165	0.114	110	660	1.75	J 2	0071-	0271-
30	2,000	40	0.133	0.092	122	730	2.25	K 2	0072-	0272-
30	2,200	40	0.120	0.083	128	770	2.35	J 3	0073-	0273-
30	2,800	40	0.095	0.066	145	870	3.00	K 3	0074-	0274-
30	3,000	40	0.088	0.061	150	900	2.90	J 4	0075-	0275-
30	3,600	40	0.074	0.051	164	980	3.60	K 4	0076-	0276-
30	4,500	40	0.059	0.041	184	1,100	4.40	K 5	0077-	0277-

See footnotes at end of table.

TABLE I. Style CUR19 capacitors – Continued.

DC rated voltage @ 105°C	Capacitance	DC surge voltage	ESR (max) 120Hz, 25°C	Impedance (max) 25°C 10 kHz 1MHz	DC leakage (max)		RMS ripple current 1/ 10°C rise 10 kHz-1MHz	Case size	Dash number 2/	
					25°C	85°C & 105°C			Low frequency vibration	High frequency vibration
Volts	µF	Volts	Ohms	Ohms	mA	Amps				
40	550	50	0.480	0.322	74	440	0.90	H 1	0078-	0278-
40	700	50	0.380	0.255	84	500	1.15	H 2	0079-	0279-
40	900	50	0.295	0.197	95	570	1.20	J 1	0080-	0280-
40	1,200	50	0.220	0.147	110	660	1.55	J 2	0081-	0281-
40	1,500	50	0.175	0.117	120	720	2.05	K 2	0082-	0282-
40	1.700	50	0.155	0.104	130	780	2.15	J 3	0083-	0283-
40	2,300	50	0.115	0.077	150	900	2.60	J 4	0084-	0284-
40	2,900	50	0.091	0.061	170	1,020	3.40	K 4	0085-	0285-
40	3,600	50	0.074	0.050	189	1,130	4.10	K 5	0086-	0286-
50	300	75	0.430	0.280	61	370	0.93	H 1	0087-	0287-
50	400	75	0.325	0.212	71	430	1.15	H 2	0088-	0288-
50	530	75	0.245	0.160	82	490	1.25	J 1	0089-	0289-
50	700	75	0.185	0.120	94	560	1.60	J 2	0090-	0290-
50	870	75	0.150	0.098	104	620	2.10	K 2	0091-	0291-
50	1,000	75	0.130	0.085	112	670	2.15	J 3	0092-	0292-
50	1,200	75	0.108	0.070	122	730	2.80	K 3	0093-	0293-
50	1,600	75	0.081	0.053	141	850	3.40	K 4	0094-	0294-
50	2,000	75	0.065	0.042	159	950	4.25	K 5	0095-	0295-
75	200	100	0.650	0.384	64	380	0.78	H 1	0096-	0296-
75	260	100	0.500	0.295	70	420	1.00	H 2	0097-	0297-
75	350	100	0.370	0.218	81	490	1.10	J 1	0098-	0298-
75	450	100	0.290	0.171	92	550	1.40	J 2	0099-	0299-
75	570	100	0.230	0.136	103	620	1.85	K 2	0100-	0300-
75	650	100	0.200	0.118	110	660	1.95	J 3	0101-	0301-
75	850	100	0.153	0.090	126	760	2.25	J 4	0102-	0302-
75	1,000	100	0.130	0.077	137	820	2.95	K 4	0103-	0303-
75	1,300	100	0.100	0.059	156	940	3.55	K 5	0104-	0304-
100	130	125	1.000	0.530	57	340	0.70	H 1	0105-	0305-
100	170	125	0.765	0.405	65	390	0.90	H 2	0106-	0306-
100	230	125	0.565	0.300	76	460	0.93	J 1	0107-	0307-
100	300	125	0.435	0.230	86	520	1.20	J 2	0108-	0308-
100	380	125	0.340	0.180	97	580	1.55	K 2	0109-	0309-
100	430	125	0.300	0.159	104	620	1.60	J 3	0110-	0310-
100	550	125	0.235	0.125	118	710	2.10	K 3	0111-	0311-
100	700	125	0.185	0.098	132	790	2.65	K 4	0112-	0312-
100	850	125	0.150	0.080	147	880	3.15	K 5	0113-	0313-
150	70	200	1.850	0.780	51	310	0.65	H 1	0114-	0314-
150	90	200	1.450	0.610	58	350	0.80	H 2	0115-	0315-
150	120	200	1.080	0.455	67	400	0.83	J 1	0116-	0316-
150	150	200	0.860	0.362	75	450	1.10	K 1	0117-	0317-

See footnotes at end of table.

TABLE I. Style CUR19 capacitors – Continued.

DC rated voltage @ 105°C	Capacitance	DC surge voltage	ESR (max) 120Hz, 25°C	Impedance (max) 25°C 10 kHz 1MHz	DC leakage (max)		RMS ripple current 1/ 10°C rise 10 kHz-1MHz	Case size	Dash number 2/	
					25°C	85°C & 105°C			Low frequency vibration	High frequency vibration
Volts	µF	Volts	Ohms	Ohms	mA	Amps				
150	200	200	0.650	0.273	87	520	1.40	K 2	0118-	0318-
150	300	200	0.430	0.181	106	640	1.80	J 4	0119-	0319-
150	380	200	0.340	0.143	120	720	2.35	K 4	0120-	0320-
150	470	200	0.280	0.096	133	800	2.85	K 5	0121-	0321-
200	50	250	2.600	0.780	50	300	0.60	H1	0122-	0322-
200	85	250	1.530	0.460	65	390	0.75	J 1	0123-	0323-
200	100	250	1.300	0.390	71	430	0.95	J 2	0124-	0324-
200	150	250	0.865	0.259	87	520	1.25	J 3	0125-	0325-
200	200	250	0.650	0.195	100	600	1.67	K 3	0126-	0326-
200	250	250	0.520	0.156	112	670	1.90	J 5	0127-	0327-
200	320	250	0.405	0.122	126	760	2.50	K 5	0128-	0328-

1/ The ripple current values shown are representative values not supported by test data.

2/ The last letter in the dash number will indicate the applicable FR level symbol (“M”,”P”, “R”, or “S”).

REQUIREMENTS:

Dimensions and configuration: See figure 1.

Case:
Type: Tubular.
Material: Metal.
Leads: See figure 1.

DC rated voltage: See table I.

Reverse voltage: 1.5 volts maximum.

Capacitance (Cap.) value: See table I.

Cap. tolerance: -10, +75 percent.

Failure rate level: M, P, R, and S.

Operating temperature range: -55°C to +105°C.

Burn-in: In accordance with MIL-PRF-39018.

DC leakage (DCL), See table I.

Equivalent Series Resistance (ESR): See table I.

Low temperature exposure:
DCL - See table I.
Cap. - See table I.
ESR - See table I.

Terminal strength: Method 211 of MIL-STD-202, test conditions A (3 pounds) and D (3 rotations).

Solderability: In accordance with MIL-PRF-39018.

Stability at reduced and high temperatures:

Step 1 (at +25°C):
DCL - See table I.
Cap. - See table I.
ESR - See table I.

Step 2 (at -55°C):
Impedance - See table I.
ΔCap. - Within the following percentages of the step 1 value:
5 to 40 V dc inclusive: ±25 percent.
50 to 100 V dc inclusive: ±20 percent.
150 to 200 V dc inclusive: ±30 percent.

Step 3 (at +25°C):
DCL - See table I.
ΔCap. - Within ±5 percent of step 1 value.
ESR - See table I.

Step 4 (at +105°C):
DCL - See table I.
ΔCap. - Within ±30 percent of step 1 value.
ESR - See table I.

Step 5 (at +25°C):
DCL - See table I.
ΔCap. - Within ±5 percent of step 1 value.
ESR - See table I.

Life: Method 108 of MIL-STD-202.
For qualification: Condition F (2,000 hours) at 85°C.
DCL - See table I.
ΔCap. - Within ±20 percent of initial measured value.
ESR - Not more than 150 percent of initial requirement.

For quality conformance: Continuation test (10,000 hours) at 85°C.
DCL - See table I.
ΔCap. - Within ±25 percent of initial measured value.
ESR - Not more than 200 percent of initial requirement.

Case insulation: In accordance with MIL-PRF-39018.

Vibration:
Low frequency - Method 201, MIL-STD-202.
High frequency (when specified, see ordering data) – In accordance with MIL-PRF-39018 with the following exceptions: Test condition letter A; duration and direction of motion - In accordance with method 204 of MIL-STD-202.

Thermal shock and immersion:
Thermal shock: Method 107 of MIL-STD-202, condition A, except in step 3, units shall be tested at applicable high temperature.
Immersion: Method 104 of MIL-STD-202, condition B (2 cycles, 30 minutes).
DCL - See table I.
ΔCap. - Within ±5 percent of initial measured value.
ESR - See table I.
Case insulation - Shall meet initial requirements.

Surge voltage:
DCL - See table I.
ΔCap. - Within ±6 percent of initial measured value.
ESR - See table I.

Moisture resistance:
Method 106 of MIL-STD-202.
DCL - See table I.
ΔCap. - Within ±6 percent of initial measured value.
ESR - See table I.
Case insulation - Shall meet initial requirements.

High temperature exposure (500 hours at 105°C).
DCL - Not more than 200 percent of initial requirement.
ΔCap. - Within ±10 percent of initial measured value.
ESR - Not more than 115 percent of initial requirement.

Resistance to solvents: In accordance with MIL-PRF-39018.

High temperature verification: In accordance with MIL-PRF-39018 at 105°C with rated voltage applied.
DCL - See table I.
ΔCap. - Within ±10 percent of initial measured value.
ESR - Not more than 130 percent of initial requirement.

Reverse voltage aging: In accordance with MIL-PRF-39018.

Marking: In accordance with MIL-PRF-39018.
Part or Identifying Number: M39018/07-(dash number from table I).
The complete dash number will include additional letter symbol (s) as shown in table I.

OPERATION NOTES:

1. Application. The 4-terminal axial leaded capacitor is designed for high frequency applications where low ESR, inductance and impedance are required. The advantage of 4-terminal construction over 2-terminal construction is that the impedance decreases above 10 kHz.

2. 10 kHz - 1 MHz Impedance. Measurements are made using a voltage divider network as shown in figure 2. The impedance value of the capacitor is then calculated from the ratio of the voltages across the known impedance and the unknown impedance as follows:

$$Z_X = \frac{R}{V_R} \times V_X$$

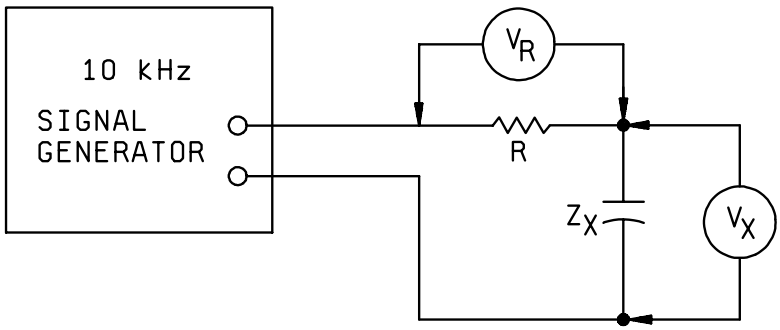

FIGURE 2. Voltage divider network.

3. DC current. Unlike 2-terminal capacitors, the dc current flows through the capacitor and contributes to the operating temperature. The temperature rise (T_L) due to the dc current may be determined from figure 3. The ability of the external leads to carry the desired current should be taken into consideration. Lead length and heat sink qualities of the printed circuit board and capacitor will affect the current capability.

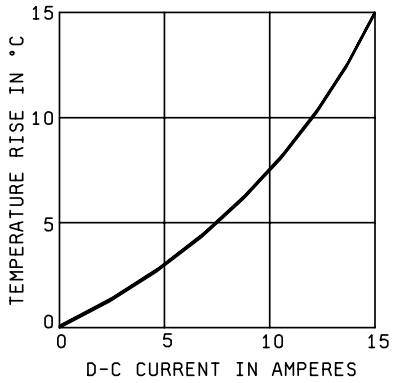

FIGURE 3. DC current vs. temperature rise.

4. Ripple current. The rms ripple current which will result in a 10°C internal temperature rise (T_R), over the frequency range of 10 kHz to 1 MHz, is tabulated in table I. For other temperature rises and frequencies, the 10 kHz - 1 MHz ripple currents may be multiplied by the factors shown in table II.

TABLE II. Factors for determining ripple currents at various frequencies.

Frequency (Hz)	Temperature rise					
	5°C	10°C	15°C	20°C	25°C	30°C
60	0.35	0.50	0.65	0.75	0.85	1.00
120	0.45	0.65	0.80	0.95	1.10	1.30
400	0.50	0.75	0.95	1.10	1.30	1.50
1K	0.55	0.80	1.00	1.15	1.35	1.60
10K-1M	0.65	1.00	1.25	1.45	1.70	2.00

5. Operating temperature. The operating temperature (T_C) is determined by obtaining the sum of the ambient temperature (T_A), the temperature rise due to the ripple current (T_R) and the temperature rise due to the dc current (T_L). $T_C = T_A + T_R + T_L$. The sum should not exceed the maximum rated temperature (+105°C).

Custodians:
Army - CR
Navy - EC
Air Force - 11

Review activities:
Navy - AS, MC, OS, SH
Air Force - 19

Preparing activity:
DLA - CC

(Project 5910-2096-07)