INCH-POUND
MIL-PRF-39023C
30 August 2004
SUPERSEDING
MIL-PRF-39023B
1 February 1999

PERFORMANCE SPECIFICATION

RESISTORS, VARIABLE, NONWIRE WOUND, PRECISION GENERAL SPECIFICATION FOR

This specification is approved for use by all Departments and Agencies of the Department of Defense.

1. SCOPE

1.1 Scope. This specification covers the general requirements for precision, nonwire-wound, variable resistors whose electrical output (in terms of percent of applied voltage) are linear or nonlinear with respect to the angular position of the operating shaft. This specification includes requirements for linear and nonlinear, single turn and multiturn, single-section (cup) and multi-section variable resistors. These resistors have a resistance tolerance of ±10 percent. These resistors are capable of full-load operation at maximum ambient temperatures of 70°C and are suitable for continuous operation, when properly derated, to maximum temperatures of 125°C, (see 3.1, 6.2, and figure 10). This specification includes procedures and requirements for the acquisition of category I, category II, and category III precision resistors.

1.2 Classification.

1.2.1 Part or Identifying Number (PIN).

a. Category I resistors: The PIN completely describes the category I resistors of this specification and is applicable only when there is no deviation to any specification requirement.

Single-section (cup) resistors

RQ090	A	A	1	2	A	B	103
Style (1.2.1.1)	Resistance temperature characteristic, maximum ambient temperature, and taps (1.2.1.2)	Shaft length (1.2.1.3)	Moisture resistance (1.2.1.4)	Life characteristic (1.2.1.5)	Function-conformity tolerance characteristic (1.2.1.6)	Output-smoothness characteristic (1.2.1.7)	Resistance (1.2.1.8)

b. Category II resistors: The PIN of 1.2.1 is modified by changes in style designation (see 1.2.1.1), when used to describe a category II resistor. The type designation in this case does not fully describe the individual resistor since a deviation to specification requirements has been made. The resistor in this case is completely identified only by the addition of a drawing number in the marking (see 3.33 and 6.2.2).

RQ09XXAA12AB103

Comments, suggestions, or questions on this document should be addressed to: Defense Supply Center, Columbus, ATTN: DSCC-VAT, Post Office Box 3990, Columbus, Ohio 43216-5000 or by email Resistor@dla.mil. Since contact information can change, you may want to verify the currency of this address information using the ASSIST Online database at http://www.dodssp.daps.mil.

c. Multisection (ganged) resistors (category III): For a multisection (ganged) resistor, the PIN includes the type designation for each section (cup), preceded by a digit denoting the number of sections (cups) in the gang, as indicated in the following example:

3RQ09XXAA12AB103
3RQ09XXAA12AB104 ganged (three cups)
3RQ09XXAA12AB103

The type designation is listed in the order in which the sections (cups) are stacked (ganged), beginning with the section (cup) nearest the mounting surfaces.

1.2.1.1 Style. The style is identified by the two-letter symbol RQ followed by a three-digit number. The letters RQ identify precision, nonwire-wound, variable resistors. The first two digits in the number identifies physical size, the last digit identifies a category I or category II resistor; the digits of category I resistors will be “0”. The digits for category II resistors are “XX”.

Example:

RQ090 - Category I resistor
RQ09XX - Category II resistor

The category III item is not identified by a style number, but is described in the users drawing.

1.2.1.2 Resistance temperature characteristic, maximum ambient temperature, and taps. The resistance temperature characteristic, maximum ambient temperature, and taps will be identified by a single letter in accordance with table I and table II.

TABLE I. Resistance temperature characteristic, maximum ambient temperature, and taps. 1/

Symbol	Ambient temperature with rated load in ^{O}C	Ambient temperature with zero load in ^{O}C	Tap located at center of resistance element ±1 degree 2/
A	70	125	Not applicable
B	70	125	applicable

1/ The test temperature and maximum resistance change will be as specified in table II.
2/ Applicable only to linear function resistors.

TABLE II. Resistance change from reference temperature.

Temperature (^{O}C)	Maximum resistance change form reference temperature (percent)
+25	Reference
0	±2.5
-15	±4
-65	±5
+25	Reference
+50	±2.5
+75	±5
+105	±5
+125	±5

1.2.1.3 Shaft length. The shaft length is identified by a single letter in accordance with table III.

TABLE III. Shaft length.

Symbol	Shaft length	
	Inch (± .0312 inch)	mm (±0.79 mm)
A	0.375	(9.53)
B	0.500	(12.70)
C	0.625	(15.88)
D	0.750	(19.05)
E	0.875	(22.23)
F	1.000	(25.40)

1.2.1.4 Moisture resistance. Moisture resistance is identified by a single digit in accordance with table IV (see 6.1).

TABLE IV. Moisture resistance characteristic.

Symbol	Moisture resistance (total ΔR) in percent	Available resistance temperature characteristic
1	5	A
2	10	A
3	25	A

1.2.1.5 Life characteristics. The life characteristic is identified by a single digit in accordance with table V.

TABLE V. Life characteristic.

Symbol	Life characteristic total number of revolutions 1/	Dither life (in hours)
1	2.5×10^5	0.5
2	1.0×10^6	2.0
3	5.0×10^6	10.0
4	25.0×10^6	50.0

1/ In multi-turn units, 1 shaft revolution = 1 revolution.

1.2.1.6 Function-conformity tolerance characteristic. The function-conformity tolerance characteristic is identified by a single letter in accordance with table VI.

TABLE VI. Function-conformity tolerance characteristic.

Symbol	Function-conformity tolerance (percent ±)	
	Initial	Degraded
A	1.0	1.5
B	0.5	0.75
C	0.25	0.375
D	0.10	0.15
E	0.05	0.075
F	0.025	0.038

1.2.1.7 Output-smoothness characteristic. The output-smoothness characteristic is identified by a single letter in accordance with table VII.

TABLE VII. Output-smoothness characteristic.

Symbol	Peak-to-peak voltage (E_O/E_{in}) percent	
	Initial	Degraded
A	2.0	2.2
B	0.5	0.7
C	0.1	0.15
D	0.025	0.04
E	0.01	0.02

1.2.1.8 Resistance. The nominal total resistance value expressed in ohms is identified by a three-digit number. The first two digits represent significant figures and the last digit specifies the number of zeros to follow. When fractional values of an ohm, or values of less than 10 ohms, are required, the letter "R" is substituted for one of the significant digits to represent the decimal point. When the letter "R" is used, succeeding digits of the group represent significant figures, as shown in the following example:

3R0 signifies 3.0 ohms

1.2.1.9 Resistance tolerance. The resistance tolerance is ±10 percent.

1.2.1.10 Example of PIN (category I resistor). The PIN "RQ0900AA12AB102" signifies:

RQ090	-	Precision, nonwire-wound, variable resistor of dimensions specified (see 3.1).
A	-	Resistance-temperature characteristic and maximum ambient temperature ±5 percent resistance change, ambient temperature 70°C (with rated load), 125°C (with zero load).
A	-	Shaft length 0.375-inch (9.53 mm) shaft length.
1	-	Resistance change after moisture resistance test ±5 percent.
2	-	Capable of 1 x 10^6 revolutions of rotational life and dither life of 2 hours.
A	-	Function-conformity tolerance of ± 1.0 percent.
B	-	Output smoothness 0.5 percent peak-to-peak voltage.
102	-	Nominal total resistance value 1,000 ohms.

1.2.1.11 Example of type designation (category II resistor). The PIN "RQ09XXAA12AB102" signifies:

RQ09XX	-	Precision nonwire-wound resistor (single turn) with requirements as specified on acquisition document.
A	-	Resistance temperature characteristic and maximum ambient temperature ± 5 percent resistance change, ambient temperature 70°C (with rated load), 125°C (with zero load).
A	-	Shaft length 0.375-inch (9.53 mm) shaft length.
1	-	Resistance change after moisture resistance test ±5 percent.
2	-	Capable of 1 x 10^6 revolutions of rotational life and dither life of 2 hours.
A	-	Function conformity tolerance of ±1.0 percent.
B	-	Output smoothness of 0.5 percent peak to peak voltage.
102	-	Nominal total resistance value 1,000 ohms.

2. APPLICABLE DOCUMENTS

2.1 General. The documents listed in this section are specified in sections 3 and 4 of this specification. This section does not include documents cited in other sections of this specification or recommended for additional information or as examples. While every effort has been made to ensure the completeness of this list, document users are cautioned that they must meet all specified requirements documents cited in sections 3 and 4 of this specification, whether or not they are listed.

2.2 Government documents.

2.2.1 Specifications, standards, and handbooks. The following specifications, standards, and handbooks form a part of this document to the extent specified herein. Unless otherwise specified, the issues of these documents are those cited in the solicitation or contract (see 6.2).

DEPARTMENT OF DEFENSE SPECIFICATION

(See supplement 1 for list of specification sheets.)

DEPARTMENT OF DEFENSE STANDARDS

MIL-STD-202	-	Test Method Standard Electronics and Electrical Components Parts.
MIL-STD-810	-	Environmental Engineering Considerations and Laboratory Tests.
MIL-STD-1285	-	Marking of Electrical and Electronic Parts.

DEPARTMENT OF DEFENSE HANDBOOKS

FED-STD-H28	-	Screw Thread Standards for Federal Services.

(Copies of these documents are available online at http://assist.daps.dla.mil/quicksearch/ or http://www.dodssp.daps.mil or from the Standardization Document Order Desk, 700 Robbins Avenue, Building 4D, Philadelphia, PA 19111-5094).

2.3 Non-Government publications. The following documents form a part of this document to the extent specified herein. Unless otherwise specified, the issues of the documents cited in the solicitation or contract (see 6.2).

AMERICAN NATIONAL STANDARDS INSTITUTE (ANSI)

ANSI/NCSL Z540-1	-	Laboratories, Calibration, and Measuring and Test Equipment.

INTERNATIONAL ORGANIZATION for STANDARDS (ISO)

ISO 10012-1	-	Equipment, Quality Assurance Requirements for Measuring - Part 1: Meteorological Confirmation System for Measuring Equipment.

(Applications for copies are available online at http://www.ansi.org/ or should be addressed to the American National Standards Institute, 11 West 42nd Street New York, NY 10036.)

2.4 Order of precedence. In the event of a conflict between the text of this document and the references cited herein (except for related specification sheets), the text of this document takes precedence. Nothing in this document, however, supersedes applicable laws and regulations unless a specific exemption has been obtained.

3. REQUIREMENTS

3.1 Specifications sheets. The individual item requirements shall be as specified herein and in accordance with the applicable specification sheet. In the event of any conflict between the requirements of this specification and the specification sheet, the latter shall govern (see 6.2.3).

3.2 Resistor categories. Resistors furnished under this specification shall be category I, II, or III, as defined herein.

3.2.1 Category I resistor. A part which meets all requirements specified on a given specification without any exception, can be completely described by a PIN, is covered by the family of products listed on the Qualified Products List (QPL), and is produced on an approved production line. Acquisition of these resistors shall be confined to sources whose family of products are listed on the QPL.

3.2.2 Category II resistor. A category II resistor is a part which is covered by the scope of a family of products qualification on an approved production line, but which differs from the category I item within the limits of similarity defined in 4.5.3. Acquisition of these resistors shall be confined to sources whose family of products is listed on the QPL.

3.2.3 Category III resistor. These resistors are of such design, material, or construction that they cannot be considered to fall within the scope of qualification.

3.3 Qualification. Resistors furnished under this specification shall be from family of products which are qualified for listing on the applicable QPL at the time set for opening of bids (see 4.4 and 6.3).

3.4 Materials. Materials shall be used which will enable the resistors to meet the performance requirements of this specification. Acceptance or approval of any constituent material shall not be construed as a guaranty of the acceptance of the finished product.

3.4.1 Plastic. Plastic laminates containing a cotton-fabric base or plastic-molding compounds containing a cotton or wood-flour filler shall not be used. Where not machined, plastic material shall have the original, smooth, or polished surfaces. Surfaces that have been sawed, cut, punched, or otherwise machined shall be as smooth as practicable.

3.4.2 Fungus. All external materials shall be nonnutrient to fungus growth or shall be treated to retard fungus growth. The manufacturers shall certify that all external materials are fungus resistant to perform the test specified in 4.7.29. There shall be no evidence of fungus growth on the external surface as a result of the test.

3.4.3 Ferrous metals. The use of ferrous metals, with the exception of stainless steel, is prohibited.

3.5 Interface and physical dimensions. Unless otherwise specified (see 6.2.3), the resistors shall meet the interface and physical dimensions specified (see 3.1).

3.5.1 Operating shaft. Operating shafts shall be made from corrosion-resistant steel.

3.5.1.1 Style. Unless otherwise specified (see 3.1, 6.2.3, and table A-I), standard operating shafts shall be round and slotted.

3.5.1.2 Length. Unless otherwise specified (see 3.1 and table A-I), the lengths of standard operating shafts shall be in accordance with table III.

3.5.2 Contact arm assembly. Contact pressure on the resistance element shall be maintained uniformly by positive pressure and shall permit smooth electrical and mechanical control of the variable resistor over the entire range of continuity travel. The moving contact shall have continuous electrical contact with its terminal throughout the entire mechanical travel and shall be insulated from the operating shaft and case.

3.5.2.1 Stops (when applicable) (see 3.1). Stops employed to limit the mechanical travel of the contact arm assembly may be a part of, but shall not complete, any electrical circuit. In no case shall the mechanical stop contact the electrical pick-off portion of the contact arm assembly.

3.5.3 Phasing. Unless otherwise specified (see 3.1 and 6.2.3), the phasing of a ganged assembly shall be performed by the supplier to meet the simultaneous conformity phasing requirement.

3.5.4 Terminals. The terminals shall be of rigid metal and shall be located as shown in the associated specifications, and as specified (see 3.1 and 6.2.3). The terminals shall be treated to facilitate soldering.

3.5.4.1 Designations. Terminals shall be numbered with No. 2 as the contact arm terminal, No. 1 as the counterclockwise (CCW) terminal, and No. 3 as the clockwise (CW) terminal and shall be located as specified. Taps (when applicable), shall be numbered in sequence, with terminal No. 4 nearest the counterclockwise end and shall be located as specified (see 3.1 and 6.2.3).

3.5.5 Threaded parts. All external threaded parts shall be in accordance with FED-STD-H28, and as specified (see 3.1).

3.5.6 Enclosure. Resistors shall have suitable enclosures for protection against mechanical damage.

3.6 DC resistance. When measured as specified in 4.7.2, the total direct-current (dc) resistance shall not deviate from the specified nominal resistance value by more than plus or minus the resistance tolerance (see 3.1, 6.2.3, and table A-I).

3.7 Lateral runout. When resistors are tested as specified in 4.7.3, the lateral runout shall not exceed 0.002 inch-per-inch (0.05 mm) of shaft length from mounting surface to point of measurement or 0.001 inch (0.03 mm) total, whichever is greater.

3.8 Shaft runout. When resistors are tested as specified in 4.7.4, the shaft runout shall not exceed 0.002 inch-per-inch (0.05 mm) of shaft length from mounting surface to point of measurement or 0.001 inch (0.03 mm) total, whichever is greater.

3.9 Pilot-diameter runout. When resistors are tested as specified in 4.7.5, the pilot-diameter runout shall not exceed 0.001 inch (0.03 mm).

3.10 Shaft radial play. When resistors are tested as specified in 4.7.6, the radial play shall not exceed 0.001 inch (0.03 mm).

3.11 Shaft end play. Unless otherwise specified (see 6.2.3), when resistors are tested as specified in 4.7.7, the end play shall not exceed 0.005 inch (0.13 mm).

3.12 Mechanical travel (applicable only to resistors with stops). When resistors are tested as specified in 4.7.8, the mechanical travel shall be as specified (see 3.1, 6.2.3, and table A-I).

3.13 Torque (see 4.7.9).

3.13.1 Starting. Unless otherwise specified (see 6.2.3), the maximum value of minimum torque required to initiate shaft rotation shall be as specified (see 3.1).

3.13.1.1 Degradation. The maximum value of starting torque shall not increase to more than 150 percent of the initial specified value (see 3.1).

3.13.2 Running. Unless otherwise specified (see 6.2.3), the maximum value of the minimum torque to sustain shaft rotation shall be as specified (see 3.1).

3.13.2.1 Degradation. The maximum value of running torque shall not increase to more than 150 percent of the initial specified value (see 3.1).

3.13.3 Stop (when applicable). The stop torque applied to the shaft positioned alternately at each extreme of travel shall cause no damage, and the mechanical travel shall not increase by more than 1 degree.

3.14 Taps (when applicable) (see 6.2.3). When resistors are tested as specified in 4.7.10, and unless otherwise specified, taps, located as specified, must be capable of carrying without damage the rated element current, as determined from the rated continuous working voltage and total resistance (see 1.2.1.2, 3.1, 4.3.2, 6.2.3 and table I). (CAUTION: Certain types of voltage (zero width) taps may require lower limits.)

3.15 Dielectric withstanding voltage. When resistors are tested as specified in 4.7.11, there shall be no damage, arcing, or breakdown. The leakage current shall not exceed 1 milliampere (mA).

3.16 Insulation resistance.

3.16.1 Initial. When resistors are tested as specified in 4.7.12, the insulation resistance shall not be less than 1,000 megohms.

3.16.2 Degradation. When resistors are tested as specified in 4.7.12, the insulation resistance shall not be less than 500 megohms.

3.17 Function conformity. Unless otherwise specified (see 6.2.3), the function conformity shall be independent conformity.

3.17.1 Function conformity tolerance.

3.17.1.1 Initial. When resistors are tested as specified in 4.7.13, the function conformity tolerance shall be one of the specified values of table VI as specified (see 3.1 and 6.2.3).

3.17.1.2 Degradation. When resistors are tested as specified in 4.7.13, after having been subjected to a previous series of environmental or mechanical tests as specified herein, the function conformity tolerance shall not exceed the specified degradation value of table VI or as specified.

3.18 Mechanical backlash. When resistors are tested as specified in 4.7.14, the operating shaft shall not move in excess of the applicable value specified in table VIII or the specified value (see 6.2.3), without moving the contact arm.

TABLE VIII. Mechanical backlash.

Functional-conformity tolerance	Mechanical backlash		
	Single turn	RQ100	RQ160 and RQ210
(Percent)	(in degrees)	(in degrees)	(in degrees)
1.000	0.50	1.50	1.00
0.500	0.25	1.50	1.00
0.250	0.10	1.50	1.00
0.100	0.10	1.00	0.50
0.050	0.10	1.00	0.50
0.025	0.10	0.50	0.25
0.010	0.10	0.50	0.25

3.19 Minimum voltage. When resistors are tested as specified in 4.7.15, the minimum voltage shall not exceed the percent of applied voltage as specified in table IX.

TABLE IX. Minimum voltage.

Total resistance	Standard minimum percent of total applied voltage
100 ohms to 200 ohms	2.0 percent maximum
Above 200 ohms to 500 ohms	1.0 percent maximum
Above 500 ohms to 1 kilohms	0.4 percent maximum
Above 1 kilohms to 2 kilohms	0.2 percent maximum
Above 2 kilohms	0.1 percent maximum

NOTE: Minimum voltage is not applicable to units with end resistors or units on which mechanical travel is limited to preclude reaching the minimum voltage shaft position.

3.20 End voltage. When measured as specified in 4.7.16, the maximum end voltage shall be as specified (see 3.1 and 6.2.3).

3.21 Output smoothness.

3.21.1 Initial. When resistors are tested as specified in 4.7.17, the output smoothness shall not exceed the degradation values specified in table VII or as specified (see 6.2.3).

3.21.2 Degradation. When resistors are tested as specified in 4.7.17, the output smoothness shall not exceed the degradation values specified in table VII or as specified (see 6.2.3).

3.22 Terminal strength. When resistors are tested as specified in 4.7.18, there shall be no evidence of mechanical or electrical damage.

3.23 Thermal shock. Unless otherwise specified (see 6.2.3), when resistors are tested as specified in 4.7.19, there shall be no evidence of mechanical damage, or opening of the element, and the total resistance change shall not exceed 10 percent of the initial resistance value (see 3.1).

3.24 Resistance-temperature characteristic. When resistors are tested as specified in 4.7.20, the resistance-temperature characteristic, referred to an ambient temperature of 25°C, shall not exceed the values specified in table I (see 6.2.3 and table XVII).

3.25 Life. When resistors are tested as specified in 4.7.21, there shall be no evidence of mechanical damage or opening of the element. Unless otherwise specified (see 6.2.3), the total resistance change shall not exceed 10 percent between the initial resistance value (see 3.6), measured at the rated ambient temperature previous to the rotational-load-life test, and any of the succeeding measurements.

3.26 Low temperature operation. When resistors are tested as specified in 4.7.22, electrical and mechanical connections shall not be adversely affected. Unless otherwise specified (see 6.2.3), the torque required to affect rotation shall not exceed two times the specified torque (see 3.1), and the total resistance change shall not exceed 5 percent of the initial resistance value (see 3.6).

3.27 Low temperature exposure. When resistors are tested as specified in 4.7.23, there shall be no evidence of mechanical damage, or opening of the element. Unless otherwise specified (see 6.2.3), the change in output ratio shall not exceed the applicable degraded function conformity tolerance or 0.5 percent, whichever is greater.

3.28 High temperature exposure. When resistors are tested as specified in 4.7.24, there shall be no evidence of mechanical damage, or opening of the element. Unless otherwise specified (see 6.2.3), the change in output ratio shall not exceed the applicable degraded function conformity tolerance or 0.5 percent, whichever is greater.

3.29 Shock (specified pulse). When resistors are tested as specified in 4.7.25, there shall be no evidence of mechanical or electrical damage, nor momentary discontinuity in excess of 0.1 millisecond (ms).

3.30 Vibration, high frequency. When resistors are tested as specified in 4.7.26, there shall be no evidence of mechanical or electrical damage, nor momentary discontinuity in excess of 0.1 ms. The total resistance change shall not exceed 2 percent of the initial resistance value (see 3.6).

3.31 Salt spray (corrosion). When resistors are tested as specified in 4.7.27, the units shall be disassembled and inspected. There shall be no appreciable corrosion.

3.32. Moisture resistance. Unless otherwise specified (see 6.2.3), when resistors are tested as specified in 4.7.28, the insulation resistance shall not be less then 10 megohms, or 100 times the resistance value, whichever is greater, and the total resistance change shall not exceed the values of table IV.

3.33 Marking. Resistors shall be marked with the following minimum information:

a. PIN (see 1.2.1) category I resistors.

b. Acquisition drawing number. Categories II and III (on category II items, the original equipment manufacturer's drawing number shall be marked on the unit; however, the specification style number shall be shown on the drawing (see 1.2.1.b)).

c. Manufacturer's name, Commercial and Government Entity (CAGE) code, or trademark.

d. Manufacturer's PIN.

e. Terminal identification shall be marked in accordance with 3.5.4.1.

f. Date code in accordance with MIL-STD-1285. When the date code does not provide specific production lot identification, the resistor shall be marked with a lot code symbol in accordance with MIL-STD-1285.

All marking shall be visible on cylindrical surface of the resistor. There shall be no space between symbols which comprise the type designation. Each resistor of a multisection (ganged) unit shall be similarly marked. All marking shall remain legible at the end of all tests.

3.34 Recycled, recovered, or environmentally preferable materials. Recycled, recovered, or environmentally preferable materials should be used to the maximum extent possible provided that the material meets or exceeds the operational and maintenance requirements, and promotes economically advantageous life cycle costs.

3.35 Workmanship. Resistors shall be processed in such a manner as to be uniform in quality and shall be free from other defects that will affect life, serviceability, or appearance.

4. VERIFICATION

4.1 Classification of inspections. The inspection requirements specified herein are classified as follows:

a. Qualification inspection (see 4.4)

b. Retention of qualification (see 4.5)

c. Conformance inspection (see 4.6)

4.2 Reliability and quality.

4.2.1 QPL system. The manufacturer shall establish and maintain a QPL system in accordance with 3.3. Evidence of such compliance is a prerequisite for qualification and retention of qualification.

4.2.2 Test equipment and inspection facilities. The supplier shall establish and maintain a calibration system in accordance with ANSI/NCSL Z540-1, ISO 10012-1, or equivalent system as approved by the qualifying activity.

4.2.3 Product assurance. A product assurance program shall be established and maintained in accordance with appendix B. Evidence of such compliance shall be verified by the qualifying activity of this specification as a prerequisite for qualification and retention of qualification.

4.3 Inspection conditions and precautions.

4.3.1 Inspection conditions. Unless otherwise specified herein, all inspections shall be in accordance with the test conditions specified in the "GENERAL REQUIREMENTS" of MIL-STD-202.

4.3.2 Precautions. Adequate precautions shall be taken during inspection to prevent condensation of moisture on resistors. Precautions shall also be taken to prevent damage by heat when soldering resistor leads to terminals. The theoretically calculated continuous working voltage or the voltage equivalent to power rating (rated wattage) shall be determined from the following formula:

$$E=\sqrt{PR}$$

Where:

E = Rated dc or root-mean-square (rms) ac continuous working voltage at commercial-line frequency and waveform.
P = Power rating.
R = Nominal total resistance.

In no case shall the rated voltage exceed the maximum continuous working voltage specified (see 3.1). Adequate precautions shall be taken during tests to prevent condensation of moisture on resistors except during the moisture-resistance and temperature-cycling tests.

4.4 Qualification. Qualification inspection shall be performed at a laboratory acceptable to the Government (see 6.3) on sample units produced with equipment and procedures normally used in production.

4.4.1 Sample size. The number of sample units comprising a sample of resistors to be subjected for qualification inspection shall be as specified in appendix A to this specification.

4.4.2 Inspection routine (category I resistors). Sample units shall be subjected to the qualification inspection specified in table X, in the order shown. Eighteen sample units shall be subjected to the inspection of group I. Additional sample unit shall be subjected to the inspection of group II, and if applicable, two additional units shall be subjected to group VII. After the inspection of group I, the 18 sample units shall then be divided as specified in table X for groups III to VI inclusive. The sample units shall then be subjected to the inspection for their particular group. When servo-mounted types are submitted for qualification, and qualification is desired for bushing-mounted units of the same physical size and construction (except for face plate), 3 additional sample units with bushing mounts shall be submitted and subjected to inspection of group I, table X. In a like manner, 3 additional sample units with servo mounts shall be subjected to group I, table X, when bushing types are submitted for qualification. Extensions of qualification from one case and winding form material to a different material will require complete qualification inspection.

4.4.3 Defective. Failure of a resistor in one or more tests of a group shall be charged as a single failure. No failures shall be allowed for groups I, II, and VII. One failure shall be allowed for each groups III, IV, and VI combined. Failures in excess of those allowed shall be cause for refusal to grant qualification.

4.5 Retention of qualification. Every 12 months, the manufacturer shall verify the retention of qualification to the qualifying activity. In addition, the manufacturer shall immediately notify the qualifying activity whenever the group B inspection results indicate failure of the qualified product to meet the requirements of this specification. Verification shall be based on meeting the following requirements:

a. The manufacturer has not modified the design of the item.

b. The specification requirements for the item have not been amended so far as to affect the character of the item.

c. Lot rejection for group A inspection does not exceed the group A sampling plan.

d. The requirements for group B inspection are met.

When group B requirements were not met and the manufacturer has taken corrective action satisfactory to the Government, group B inspection retesting shall be instituted.

4.5.1 Category II resistors. The inspections applicable to category II resistors (in addition to the qualification of the associated family of products) shall be any testing specified in the acquisition document, the groups A and B conformance tests shall be specified herein (see 6.2.3), and any other additional conformance test specified in the acquisition document.

4.5.2 Category III resistors. All acquisition documents shall specify testing, which shall consist of requirements specified on the drawing and all tests listed in table X. Requirements for these tests shall be modified as necessary in the acquisition document. Groups A and B quality conformance tests shall be specified in addition to any other tests considered necessary (see 6.2.3).

TABLE X. Qualification inspection.

Inspection 1/	Requirements paragraph	Method paragraph	Number of samples	Number of defectives
Group I				
DC resistance	3.6	4.7.2		
Visual and mechanical examination 2/	3.1, 3.4 to 3.5.2 inclusive, 3.5.4 to 3.5.6 inclusive, 3.33 to 3.34 inclusive	4.7.1		
Lateral runout	3.7	4.7.3		
Shaft runout	3.8	4.7.4		
Pilot diameter runout	3.9	4.7.5		
Shaft radial play	3.10	4.7.6		
Shaft end play	3.11	4.7.7		
Mechanical travel (applicable only to resistors with stops)	3.12	4.7.8	18	0
Torque (starting)	3.13.1	4.7.9.1		
Torque (running)	3.13.2	4.7.9.2		
Torque (stop)	3.13.3	4.7.9.3		
Taps	3.14	4.7.10		
Dielectric withstanding voltage	3.15	4.7.11		
Insulation resistance	3.16	4.7.12		
Functional conformity tolerance	3.17.1	4.7.13		
Mechanical backlash	3.18	4.7.14		
Minimum voltage	3.19	4.7.15		
End voltage	3.20	4.7.16		
Output smoothness	3.21	4.7.17		
Terminal strength	3.22	4.7.18		
Group II				
Visual and mechanical examination	3.1, 3.4, 3.5, 3.33, and 3.34	4.7.1	1	0
Group III				
Thermal shock	3.23	4.7.19		
Resistance temperature characteristic	3.24	4.7.20		
Life	3.25	4.7.21		
Functional conformity tolerance	3.17.1	4.7.13	6	
Mechanical backlash 3/	3.18	4.7.14		
Output smoothness	3.21	4.7.17		
Dielectric withstanding voltage (atmospheric)	3.15	4.7.11.1		
Insulation resistance	3.16	4.7.12		
Torque (starting)	3.13.1	4.7.9.1		1
Group IV				
Thermal shock	3.23	4.7.19		
Low temperature operation	3.26	4.7.22		
Low temperature exposure	3.27	4.7.23		
Output smoothness	3.21	4.7.17		
Torque (starting)	3.13.1	4.7.9.1	3	
High temperature exposure	3.28	4.7.24		
Functional conformity tolerance	3.17.1	4.7.13		
Output smoothness	3.21	4.7.17		
Insulation resistance	3.16	4.7.12		
Torque (starting)	3.13.1	4.7.9.1		

See footnotes at end of table.

TABLE X. Qualification inspection Continued.

Inspection 1/	Requirements paragraph	Method paragraph	Number of samples	Number of defectives
Group V				
Thermal shock	3.23	4.7.19		
Shock (specified pulse)	3.29	4.7.25		
Vibration, high frequency	3.30	4.7.26		
Functional conformity tolerance	3.17	4.7.13		
Output smoothness	3.21	4.7.17	3	
Dielectric withstanding voltage (atmospheric)	3.15	4.7.11.1		
Insulation resistance	3.16	4.7.12		
Shaft end play	3.11	4.7.7		1
Torque (starting)	3.13.1	4.7.9.1		
Salt spray (corrosion)	3.31	4.7.27		
Group VI				
Thermal shock	3.23	4.7.19		
Moisture resistance	3.32	4.7.28		
Functional conformity tolerance	3.17.1	4.7.13	6	
Output smoothness	3.21	4.7.17		
Torque (starting)	3.13.1	4.7.9.1		
Group VII				
Fungus 4/	3.4.2	4.7.29	2	0

1/ The requirements for qualification inspection shall be those specified herein (and not those in contract or order).
2/ Marking shall be considered defective only if the marking is illegible.
3/ Applicable only to multi-turn units.
4/ This test not required if manufacturer certifies that all external materials are fungus resistant.

4.5.3 Scope of family of products qualification. Family of products qualification shall cover all resistors similar to the category I resistor which passed qualification requirements. Resistors meeting this criteria are designated as category II resistors. In order to be considered similar to the category I resistor, the category II resistor shall be within the following restrictions:

a. The category II resistor shall have been produced on the same production line approved for the category I resistors.

b. Material. All materials and finishes used in the manufacture of the category II resistor shall be the same as those used in the corresponding category I resistor submitted. This includes, but is not necessarily limited to, the materials used for the housing or case, shaft, mounting, construction, slip rings, rotors, or sliders. There shall be no restriction on the resistance element or contact (wiper) materials provided the resistor meets all performance requirements. In all cases, the materials shall meet the requirements specified in 3.4.

c. Interface and physical dimensions. The basic interface and physical dimensions of the category II resistor shall be the same as that of the corresponding category I resistor and shall meet the requirements of 3.5 to 3.5.6 inclusive. The only exceptions shall be tap and terminal design and construction which are unrestricted. Servo and bushing mounting design and construction may vary, however, the basic design and construction of the shaft bearing shall be similar to the category I resistor.

d. External dimensions. The external dimensions of the housing or case of the category II resistor shall not deviate more than ±10 percent of those of the corresponding category I resistor.

e. Wattage rating. Category II resistors shall have wattage ratings equal to or less than that of corresponding category I resistors.

f. Output smoothness. Category II resistors shall have output smoothness content the same or greater than the corresponding category I resistor.

g. Rotational load life. Category II resistors shall have rotational load life requirements equal to or less stringent than the corresponding category I resistor.

h. Temperature rating. The maximum ambient and operating temperatures of the category II resistor shall not exceed those of the corresponding category I resistor.

i. Multiturn. Category II resistors shall have the same nominal number of turns as the corresponding category resistor.

j. Multisection. Each section of a multisection resistor shall be considered separately and compared to, corresponding category I resistors to determine similarity. If each section meets this criteria, the entire multisection resistor shall be considered a category II resistor.

k. Moisture resistance. Category II resistors shall have moisture resistance requirements equal to or less stringent than the corresponding category I resistor.

l. The category II resistor may vary from the corresponding category I resistor without restriction in the following parameters for general requirements specified herein:

(1) Linearity and conformity.

(2) Actual electrical travel angle.

(3) Taps and tap location.

(4) Mechanical travel.

(5) Length, diameter, and configuration of operating shaft.

(6) Resistance and resistance tolerance.

(7) Absolute minimum resistance.

(8) Temperature coefficient.

(9) Running, starting, and stop torque.

(10) End play.

4.6 Conformance inspection.

4.6.1 Inspection of product for delivery. Inspection of product for delivery shall consist of groups A and B inspections.

4.6.1.1 Inspection lot. An inspection lot, as far as practicable, shall consist of all the resistors of the same style, or styles representing a group (see table A-I). The sample units shall be of the same class provided under essentially the same conditions, and offered for inspection at one time.

4.6.2 Group A inspection. Group A inspection shall consist of the inspections specified in table XI, and shall be made on the same set of sample units, in the order shown.

TABLE XI. Group A inspection.

Inspection	Requirement paragraph	Method paragraph	Sampling plan
Dimensions	3.5	4.7.1	See 4.6.2.1
Lateral runout	3.7	4.7.3	
Shaft runout	3.8	4.7.4	
Pilot diameter runout	3.9	4.7.5	
Shaft radial play	3.10	4.7.6	
Shaft end play	3.11	4.7.7	
Torque	3.13	4.7.9	
Marking	3.33	4.7.1	
Workmanship	3.35	4.7.1	
DC resistance	3.6	4.7.2	
Taps (when applicable)	3.14	4.7.10	
Dielectric withstanding voltage	3.15	4.7.11	
Insulation resistance	3.16	4.7.12	
Functional conformity tolerance	3.17	4.7.13	
Mechanical backlash	3.18	4.7.14	
End voltage	3.20	4.7.16	
Output smoothness	3.21	4.7.17	
Terminal strength	3.22	4.7.18	

4.6.2.1 Sampling plan. A sample of parts from each inspection lot shall be randomly selected in accordance with table XII. If one or more defects are found, the lot shall be rescreened and defects removed. After screening and removal of defects, a new sample of parts shall be randomly selected in accordance with table XII. If one or more defects are found in the second sample, the lot shall be rejected and shall not be supplied to this specification.

TABLE XII. Sampling plan.

Lot size	Sample size
2 to 100	100 percent
101 to 150	100
151 to 3,200	125
3,201 to 10,000	192
10,001 to 35,000	294
35,001 to 150,00	294
150,001 to 500,00	345
500,001 to over	435

4.6.3 Group B inspection. Group B inspection shall consist of the inspections specified in table XIII, in the order shown. The inspection shall be performed on sample units which have been subjected to and passed group A inspection.

TABLE XIII. Group B inspection.

Inspections 1/	Requirement paragraph	Method paragraph	Sampling plan
Thermal shock	3.23	4.7.19	
Functional conformity tolerance (degradation)	3.17.1.2	4.7.13	
Output smoothness (degradation)	3.21.2	4.7.17	See
Dielectric withstanding voltage (atmospheric)	3.15	4.7.11.1	4.6.3.1
Insulation resistance (degradation)	3.16.2	4.7.12	
Torque (degradation)	3.13.1.1	4.7.9.1	

1/ If the manufacturer can demonstrate that this test has been performed five consecutive times with zero failures, the frequency of this test, with the approval of the qualifying activity, can be performed on an annual basis. If the design, material, construction or processing of the part is changed, or if there are any quality problems or failures, the qualifying activity may require resumption of the original test.
2/ Failure of a resistor in one or more tests shall be charged as a single defective.

4.6.3.1 Sampling plan. Two sample units per lot shall be subjected to group B inspection with no failures permitted.

4.6.4 Small quantity production. If no more than 75 resistors of the same style or group of styles, defined for lot formation (see 4.6.1.1), are produced during a continuous 3-month period, the entire 3 month production may be submitted as one lot. In the case of failure, the entire lot shall be rejected and all units involved shall be subject to corrective action.

4.6.4.1 Disposition of sample units. Sample units which have been subjected to group B inspection may be delivered on the contract or order.

4.6.4.2 Noncompliance. If a sample fails to pass group B inspection, the supplier shall take corrective action on the materials or processes, or both, as warranted, and on all units of product which can be corrected and which were manufactured under essentially the same conditions, with essentially the same materials and processes, and which are considered subject to the same failure. Acceptance of the product shall be discontinued until corrective action, acceptable to the Government, has been taken. After the corrective action has been taken, group B inspection shall be repeated on additional sample units (all inspection, or the inspection which the original sample failed, at the option of the Government). Group A inspections may be reinstituted; however, final acceptance shall be withheld until group B reinspection has shown that the corrective action was successful. In the event of failure after reinspection, information concerning the failure and corrective action taken shall be furnished to cognizant inspection activity and the qualifying activity.

4.6.5 Inspection of preparation for delivery. Sample packages and packs and the inspection of preservation, packaging, packing, and marking for shipment and storage shall be in accordance with section 5.

4.7 Methods of examination and test.

4.7.1 Visual and mechanical examination. Resistors shall be examined to verify that the materials, interface, physical dimensions, markings, and workmanship are in accordance with the applicable requirements (see 3.1, 3.4 to 3.5.6 inclusive, 3.33 and 3.35 inclusive).

4.7.2 DC resistance (see 3.6). Resistors shall be tested in accordance with method 303 of MIL-STD-202. The following details shall apply.

a. The same bridge shall be used for all resistance measurements in any one test, but not necessarily for all tests.

b. Test voltage: See table XIV.

c. Positioning of the wiper: Position the wiper on the electrical overtravel. If this is not possible due to the limitations of total mechanical travel, or the existence of continuous electrical travel, and the total resistance measurement is critically close to the tolerance limits, the shaft should be moved to a region which maximizes the resistance reading during the total resistance measurement.

TABLE XIV. DC resistance test voltage.

Total resistance, nominal	Maximum test voltage across the resistor 1/
Ohms	Volts
10 and less	0.3
Over 10 to 100 inclusive	1.0
Over 100 to 1,000 inclusive	3.0
Over 1,000 to 10,000 inclusive	10.0
Over 10,000 to 0.1 megohm inclusive	30.0
Over 0.1 megohm	100.0

1/ The voltage used for the initial test shall be used for all subsequent tests.

4.7.3 Lateral runout (see 3.7). This test shall be performed in accordance with figure 1. Make the measurement with the potentiometer mounted firmly in the shaft holding fixture and with the shaft axis in a vertical position. Clamp the shaft within 0.125 inch (3.17 mm) of the front surface of the potentiometer without interference and hold rigid with respect to the dial indicator. The potentiometer body is to remain free to rotate. Care should be taken to insure that the shaft is not distorted in any way due to the mode of clamping or the inherent weight of the potentiometer body. Position the dial indicator such that its probe contacts the smooth portion of mounting surface of the potentiometer less than 0.125 inch (3.17 mm) from the outside edge of the mounting surface. The probe should be depressed sufficiently to insure a proper positive and negative indication. Unless corrections are made in the gross force, the force due to pressure and operation of dial gages shall not exceed 0.3 ounce. A 0.5 pound load is applied normally to the centerline of the shaft axis on the potentiometer body within 0.125 inch (3.17 mm) of the mounting surface. Simultaneously, a 0.5 pound load is applied axially on the centerline of the potentiometer. The loads serve to remove the shaft radial and end plays. For small diameter shafts, the magnitude of the load applied shall be reduced such that it never exceeds that which would cause the shaft to permanently deform. The body of the potentiometer is then slowly rotated through 360 degrees, or through the total mechanical travel, whichever is less. The lateral runout is the total indicated reading determined by adding the maximum positive and negative readings without regard to algebraic signs. The dial reading should then be divided by the mounting surface radius, at the point of dial measurement.

4.7.4 Shaft runout (see 3.8). This test shall be performed in accordance with figure 2. Mount the potentiometer firmly with the shaft axis in a horizontal position and hold rigid with respect to the dial indicator. Position the dial indicator such that its probe contacts the shaft within 0.125 inch (3.17 mm) from the end of the shaft or the edge of any interruption of the smooth cylindrical shaft surface. This measurement requires that the shaft be a smooth cylindrical surface at the point of measurement and when specified, shafts with noncylindrical surfaces such as flats, slots, or splines will require the use of the cylindrical shaft adapter. Depress the probe sufficiently to insure to proper positive and negative indication of the dial. Unless corrections are made in the gross force, the force due to pressure and operation of dial gages shall not exceed 0.3 ounce. Apply 0.5 pound load radially to the shaft to remove shaft radial play and position as close to the indicator probe as is practical. For small diameter shafts reduce the magnitude of the load applied such that it never exceeds that which would cause the shaft to permanently deform. Then rotate the shaft slowly through 360 degrees, or through its total mechanical travel, whichever is less. The shaft runout is the total indicated reading determined by adding the maximum positive and negative readings without regard to algebraic signs. The dial reading should then be divided the length of shaft from the mounting surface to the point of dial measurement.

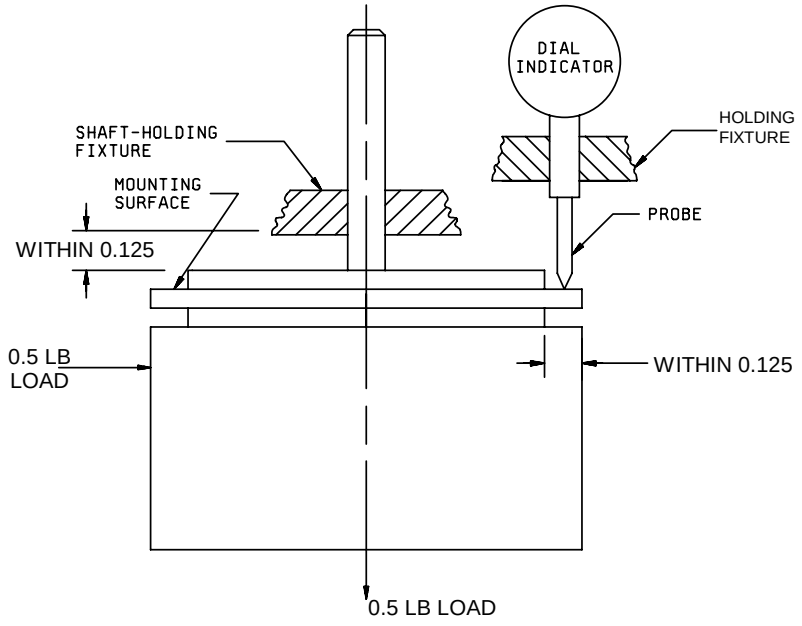

FIGURE 1. Measurement of lateral runout

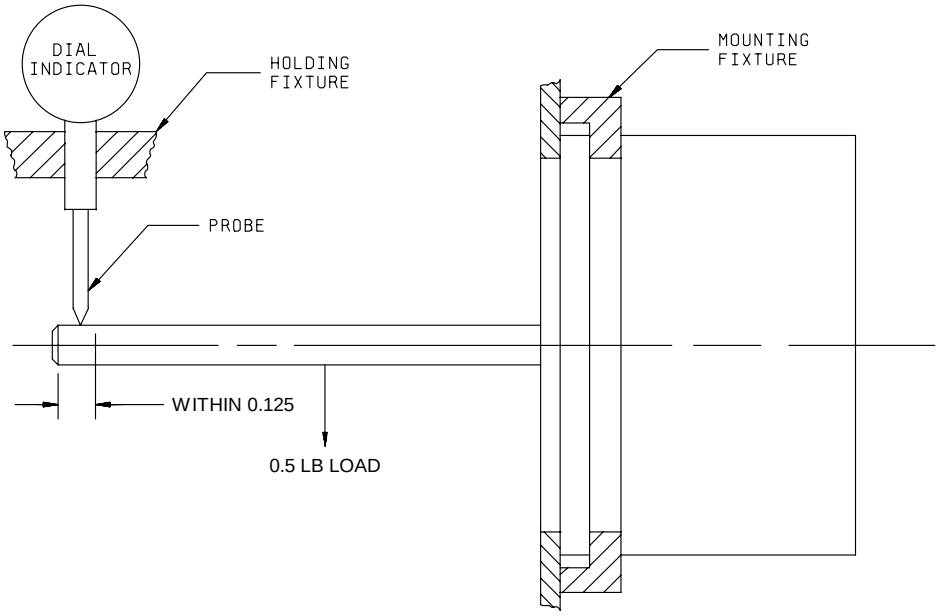

FIGURE 2. Measurement of shaft runout.

4.7.5 Pilot diameter runout (see 3.9). This test shall be performed in accordance with figure 3. Make the measurement with the potentiometer mounted firmly in the shaft holding fixture and with the shaft axis in a vertical position. Clamp the shaft within 0.125 inch (3.17 mm) of the front surface of the potentiometer without interference and hold rigid with respect to the dial indicator. The potentiometer body is to remain free to rotate. Take care to insure that the shaft is not distorted in any way due to the mode of clamping or the inherent weight of the potentiometer body. Position the dial indicator such that its probe contacts the periphery of the pilot surface near the mid-point of the surface. Depress the probe sufficiently to insure a proper positive and negative indication. Unless corrections are made in the gross force, the force due to pressure and operation of dial gages shall not exceed 0.3 ounce. A 0.5 pound load is applied normal to the centerline of the shaft axis on the potentiometer body with 0.125 inch (3.17 mm) of the mounting surface to remove the shaft radial play. For small diameter and long shafts reduce the magnitude of the load applied such that it never exceeds that which would cause the shaft to permanently deform. The body of the potentiometer is then slowly rotated through 360 degrees, or through the total mechanical travel, whichever is less. The pilot diameter runout is the total indicated reading determined by adding the maximum positive and negative readings without regard to algebraic signs.

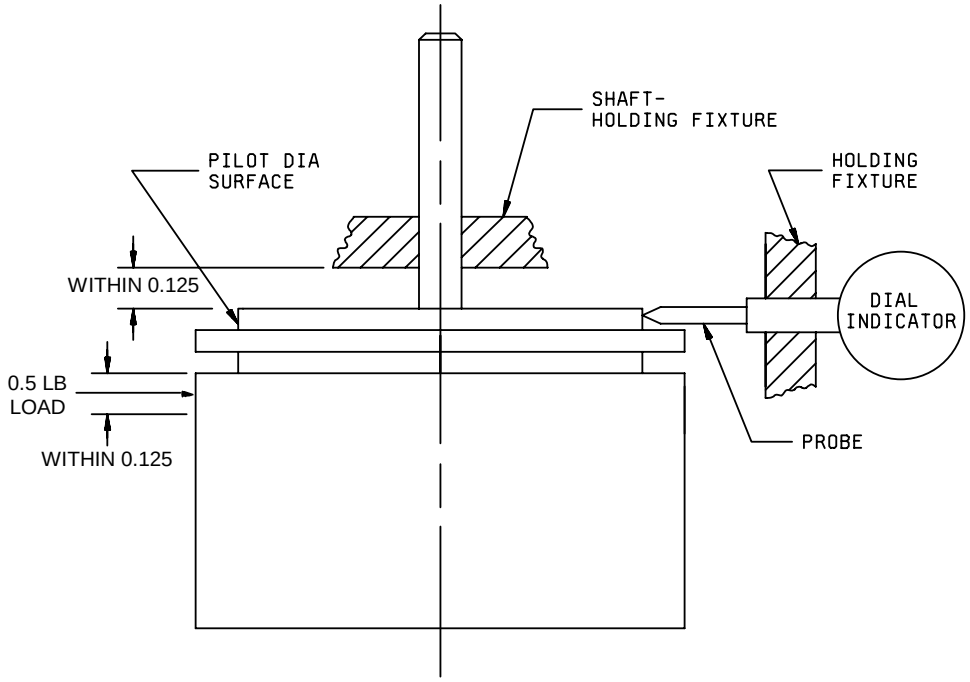

FIGURE 3. Measurement of pilot diameter runout.

4.7.6 Shaft radial play (see 3.10). This test shall be performed in accordance with figure 4. Mount the potentiometer firmly with the shaft axis in a horizontal position and hold rigid with respect to the dial indicator. Position the dial indicator such that its probe contacts the shaft within 0.125 inch (3.17 mm) of the front surface of the potentiometer body. Depress the probe sufficiently to insure a proper positive and negative indication of the dial. Unless corrections are made in the gross force, the force due to pressure and operation of dial gages shall not exceed 0.3 ounce. A 0.5 pound load is applied normal to the shaft at a point 0.500 inch (12.7 mm) from the front surface of the potentiometer (or at the end of the shaft for shaft extensions less than 0.500 inch (12.7 mm) in two opposite directions, one at a time along the axis of the dial indicator probe (or perpendicular to the stylus if a pivot pointer indicator is used). Then rotate the plane of application of load and position of the indicator probe 90° relative to the potentiometer body without rotating the shaft and then repeat procedure. For small diameter and long shafts reduce the magnitude of the load applied such that it never exceeds that which would cause the shaft to permanently deform. The shaft radial play is the largest total indicated reading for either of the two readings. The total indicated reading is determined by adding the maximum positive and negative readings without regard to algebraic signs measured in the plane of the applied forces.

4.7.7 Shaft end play (see 3.11) This test shall be performed in accordance with figure 5. The potentiometer is mounted firmly by its normal means with the shaft axis in a vertical position and held rigid with respect to the dial indicator, leaving the shaft free to rotate. The dial indicator is positioned with its probe parallel (or normal if pivot pointer indicator is used) to the axis of the shaft and in contact with the end of the shaft on the centerline. The probe is depressed sufficiently to insure a proper positive and negative indication. Unless corrections are made in the gross force, the force due to pressure and operation of dial gages shall not exceed 0.3 ounce. A 0.5 pound load is applied alternately in opposite directions along the axis of the shaft. The shaft end play is the total indicated reading determined by adding the maximum positive and negative readings without regard to algebraic signs.

4.7.8 Mechanical travel (applicable only to resistors with stops) (see 3.12). Resistors shall be placed in a suitable angle-indicating device, and the operating shaft shall be rotated from one stop to the other and held against the stops with a torque of approximately 1 ounce-inch. The mechanical travel shall be determined from the number of degrees traversed between stops.

4.7.9 Torque (see 3.13).

4.7.9.1 Starting. Mount the potentiometer firmly by its normal mounting means. Connect the load device to the potentiometer shaft so as to prevent relative movement between the two. A torque is applied through the load device and about the axis of the potentiometer shaft until shaft rotation is initiated. Care should be exercised to avoid applying radial or axial loads that will cause the shaft to deform or influence the measurement. The procedure is followed for each direction of rotation at each obvious point of mechanical or electrical junction such as ends of dead space, taps and shorts, and at three randomly selected points over the total mechanical travel. The starting torque is the maximum indicated reading of the load device.

4.7.9.2 Running. Mount the potentiometer firmly by its normal mounting means. Connect the load device to the potentiometer shaft so as to prevent relative movement between the two. Sufficient torque is applied through the load device and about the axis of the potentiometer shaft until a sustained uniform shaft rotation of 4 rpm is achieved. Care should be exercised to avoid applying radial or axial loads that will cause the shaft to deform or influence the measurement. This procedure is followed over the total mechanical travel in both clockwise and counterclockwise directions. The running torque is considered to be the maximum reading of the load device.

4.7.9.3 Stop (when applicable). Mount the potentiometer in the travel measuring device and securely lock the shaft to the travel indicator. The absolute readings are recorded at each end of the total mechanical travel. Then apply the specified static stop strength load to the stops and hold against the stop for 10 seconds at each end of the mechanical travel. The point of application of the load to the shaft should be within 0.125 inch (3.17 mm) of the front mounting surface of the potentiometer to avoid applying unwanted moments or load to the shaft. Final readings of the absolute values of the end of total mechanical travel are then taken in the same manner as the initial values. The differences between the final readings and their corresponding initial readings are the permanent changes of the stop positions.

4.7.10 Taps (when applicable) (see 3.14). Resistors shall be mounted in a suitable angle indicating device. They shall be excited at their end terminals and a suitable null indicating device shall be connected between the contact arm terminal and each of the tap terminals in turn. The angular location of each of the resistance element connections shall be measured with respect to a specified reference location. A tap is indicated by a null reading between the contact arm terminal and another terminal. If a tap extends over an appreciable area, the location of the tap shall be considered as being the midpoint of the tap. During this test, precaution shall be taken to insure that the maximum current of the potentiometer tap or contact arm is not exceeded.

4.7.10.1 Tap resistance (when specified). Connect the constant current source to the test pot as indicated on figure 6, and adjust the source to 1.0 mA or the maximum current rating of the tap or resistance element, whichever is less. Using the shaft positioning device, move the shaft to the position on the resistance element that minimizes the voltage V. The tap resistance is determined from V and I_C.

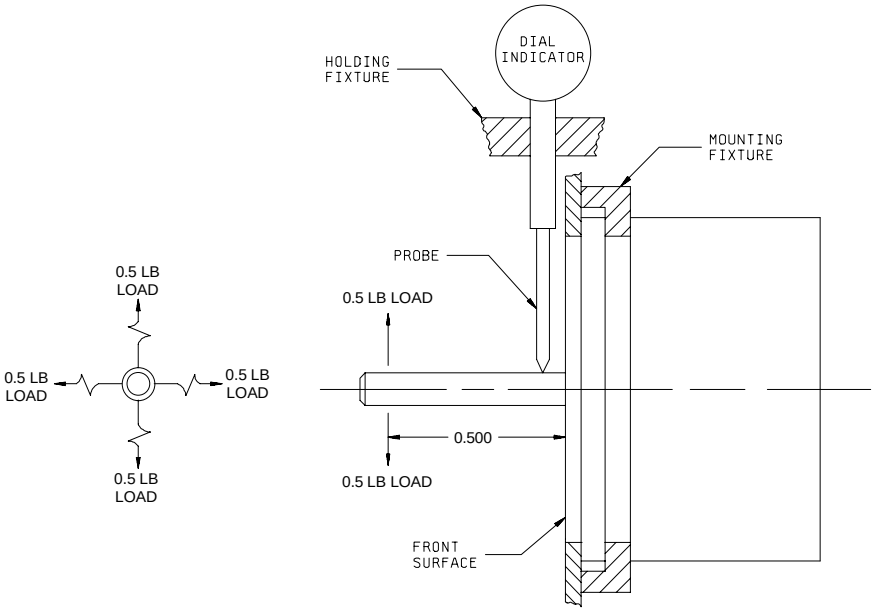

FIGURE 4. Measurement of shaft radial play.

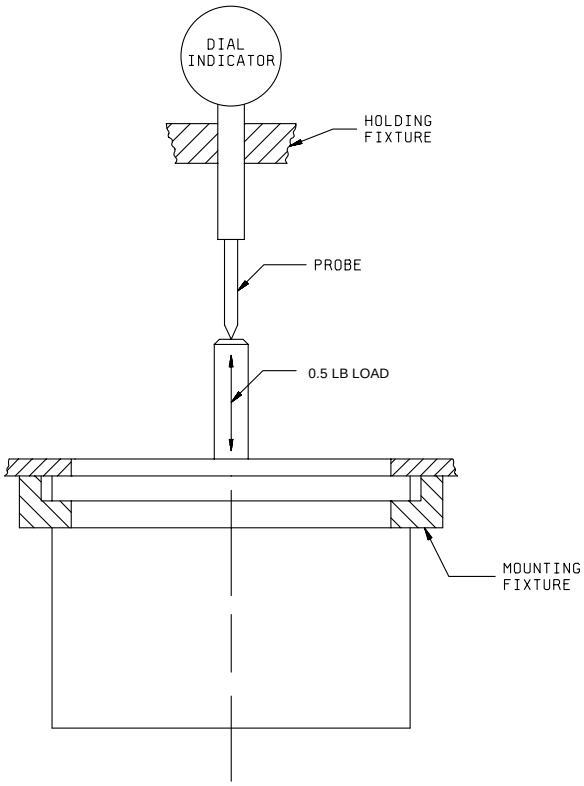

FIGURE 5. Shaft end play.

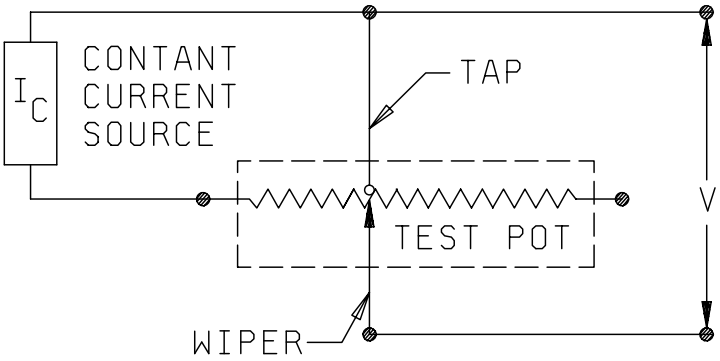

FIGURE 6. Test circuit for tap resistance.

4.7.11 Dielectric withstanding voltage (see 3.15).

4.7.11.1 At atmospheric pressure. Resistors shall be tested in accordance with method 301 of MIL-STD-202. The following details and exceptions shall apply:

a. Mounting: For qualification inspection, the resistors shall be mounted on metal plates of sufficient size to extend beyond the resistor extremities. The metal plates and the shafts shall make electrical contact with each other. The terminals of each section shall be tied together. For all other testing, the use of metal plates is optional.

b. Magnitude of test voltage: 750 volts rms for resistors of 1.125 inch (28.58 mm) diameter and smaller; 1,000 volts rms for resistors having diameters larger than 1.125 inches (28.58 mm).

c. Nature of potential: From an alternating-current (ac) supply at commercial-line frequency and waveform. This potential shall be applied for a minimum of 5 seconds and not more than 60 seconds.

d. Points of application of test voltage: For single-section resistors, between the terminals connected together and the shaft; for multi-section resistors, between the terminals of adjacent sections and between the terminals of each section and the shaft.

e. Measurement and examination during test: The leakage current shall be measured; resistors shall be examined for evidence of arcing and breakdown.

f. Examination after test: Resistors shall be examined for evidence of damage.

4.7.11.2 At reduced barometric pressure. Following the test specified in 4.7.11.1, resistors shall be tested in accordance with method 105 of MIL-STD-202. The following details and exception shall apply:

a. Method of mounting: As specified in 4.7.11.1a.

b. Test condition: C.

c. Period of time at reduced pressure prior to application of potential: 1 minute.

d. Tests during subjection to reduced pressure: A potential from an ac supply at commercial-line frequency and waveform shall be applied for 1 minute, as follows: 250 volts rms for resistors of 1.125 inches (28.58 mm) diameter and smaller; 350 volts rms for resistors having diameters larger than 1.125 inches (28.58 mm).

e. Points of application: As specified in 4.7.11.1d.

f. Measurement and examinations during test: As specified in 4.7.11.1e.

g. Examination after test: As specified in 4.7.11.1f.

4.7.12 Insulation resistance (see 3.16). Resistors shall be tested in accordance with method 302 of MIL-STD-202. The following details shall apply:

a. Test condition: B.

b. Mounting: As specified in 4.7.11.1a.

c. Points of measurement: As specified in 4.7.11.1d.

4.7.13 Function conformity (see 3.17). Conformity measurements shall be performed at intervals of not more than 3.5 percent of the theoretical electrical travel (see 3.1 and 6.2.1) or 45 degrees, whichever is less. The resistors shall be performed by using a 10 volt ± 3 volt dc potential or the rated continuous working voltage, whichever is less. Unless otherwise specified, the method employed for the measurement of conformity shall be such that the combined inherent errors of the measuring system shall not exceed the value specified in table XV. Unless otherwise specified, when ganged units are submitted, conformity measurements shall be performed on each individual cup of the gang, indexed against the front cup, and each cup of the gang shall be required to be within its tolerance.

TABLE XV. Conformity.

Function tolerance (linear) 1/	Required accuracy of measurement
Percent	Percent
1.000	0.100
0.500	0.050
0.250	0.025
0.100	0.010
0.050	0.005
0.025	0.0025

1/ These tolerances shall be considered standard values.

4.7.14 Mechanical backlash (see 3.18). The potentiometer is mounted in the travel measuring device, connected to the voltage ratio equipment and the operating shaft is displaced to approximately the 40-percent-voltage point (not in a tap or shorted area). The voltage ratio equipment is then adjusted to obtain zero indication on the null indicator. The shaft is moved approximately 0.25 revolution (or 10 percent) in the direction of decreasing output voltage and then in a reverse direction until the null detector first approaches a zero reading. At this point a travel reading is taken. The shaft is then moved to approximately the 80 percent voltage point and returned in the opposite direction until the null detector passes through zero and shows its first perceptible change from zero. At this point the position of the shaft is again noted. The difference between the two shaft position readings is the backlash.

4.7.15 Minimum voltage (see 3.19). Mount the potentiometer to the travel measuring device and connect the voltage ratio equipment to the appropriate potentiometer terminals such that the zero potential reference lead is connected to the end terminal concerned. The travel measuring device provides fine control of the shaft position. Move the shaft until a minimum reading is indicated on the voltage ratio equipment. This reading is expressed as a percentage and is the minimum voltage.

4.7.16 End voltage (see 3.20). Mount the potentiometer to the travel measuring device and phase the shaft to the index point. Connect the voltage ratio equipment to the appropriate potentiometer terminals such that the zero potential reference lead is connected to the end terminal concerned. Locate and position the shaft at the theoretical end point. The output ratio measured at this position, expressed as a percentage, is the end voltage corresponding to that end terminal.

4.7.17 Output smoothness (see 3.21). Mount the potentiometer in the 4 rpm constant speed drive and excite it with the power supply. Connect the wiper and power common lead to the input of the filter and the output of the filter to the oscilloscope as shown on figure 7. When a load is specified for a conformity test, use that load for the output smoothness test. Unless otherwise specified, when no load is specified for the conformity test, apply a load $R_L = 100 \times R_T$ between the wiper and the CCW end for the output smoothness test. The output smoothness is the largest excursion voltage occurring over one specified travel increment, divided by the total applied voltage. Unless otherwise specified, the travel increment is 1 percent of the theoretical electrical travel. Excursions occurring at the point of abrupt changes in output slope (start, end, and reversal) are not considered output smoothness faults.

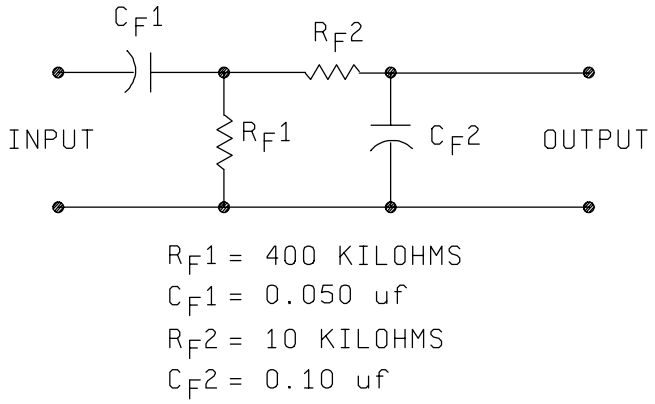

FIGURE 7. Output smoothness filter.

4.7.18 Terminal strength (see 3.22).

4.7.18.1 Pull. Resistors shall be tested in accordance with method 211 of MIL-STD-202. The following details and exceptions shall apply:

a. Test condition: A. Applied force - 2 pounds.

b. Measurement after test: Resistors shall be examined for evidence of mechanical damage, and tested for electrical continuity.

4.7.18.2 Push. Resistors shall be tested in accordance with method 211 of MIL-STD-202. The following details and exceptions shall apply:

a. Test condition: A, except force shall be applied in the direction toward the resistor body. Applied force - 2 pounds. Resistors clamped by the resistor body - Force applied to each terminal individually.

b. Measurement after test: Resistors shall be examined for evidence of mechanical damage, and tested for electrical continuity.

4.7.19 Thermal shock (see 3.23). Resistors shall be tested in accordance with method 107 of MIL-STD-202. The following details and exceptions shall apply:

a. Special mounting: Resistors shall be mounted by their normal mounting means in such a manner that there is at least 1 inch (25.4 mm) of free air space around each resistor. The mounting shall be so positioned with respect to the air stream that it offers the least obstruction to the flow of air across and around the resistors.

b. Test conditions: As specified in table XVI.

c. Measurements before cycling: Total resistance as specified in 4.7.2.

d. Number of cycles: 5 minimum.

e. Measurement after cycling: Total resistance shall be measured as specified in 4.7.2, and resistors shall be examined for evidence of mechanical damage.

TABLE XVI. Temperature-cycling test conditions.

Step	Temperature (°C)	Time (minutes)
1	-65, +0, -5	30
2	25, +10, -5	10 to 15
3	125, +10, -5	30
4	25, +10, -5	10 to 15

4.7.20 Resistance-temperature characteristic (see 3.24). Resistors shall be tested in accordance with method 304 of MIL-STD-202. The following details shall apply:

a. Test temperatures: As specified in table XVII.

b. Measurements at end of each period: Total resistance shall be measured as specified in 4.7.2, at the temperature maintained during the period.

c. The resistance-temperature characteristic shall be calculated as percentage change in total resistance from the resistance at the reference temperature.

$$\text{Resistance} - \text{temperature characteristic} = \frac{R2 - R1}{R1} x100$$

TABLE XVII. Resistance temperature characteristic test temperatures.

Sequence	Temperature (°C)
1	25
2	0
3	-15
4	-65
5	25
6	50
7	75
8	105
9	125

NOTE: At the option of the manufacturer, the reverse sequence of table XVII, may be as follows:

1. 25 ±3 °C
2. 0 ±3 °C
3. 50 ±3 °C
4. 75 ±3 °C
5. 105 ±3 °C
6. 125 ±3 °C
7. 25 ±3 °C
8. -15 ±3 °C
9. -65 ±3 °C

4.7.21 Life (see 3.25). The test units for life test will be divided evenly into two groups. One group shall be subjected to rotational life test concurrently with load life test. The other group shall be subjected to dither life and this same group shall then be subject to the load life test.

4.7.21.1 Rotational load life. This test is to be performed on one-half of the samples as specified in 4.7.21.

4.7.21.1.1 Mounting. Resistors shall be securely mounted by their normal mounting means.

4.7.21.1.2 Test conditions. This test shall be conducted within 2°C of the maximum ambient temperature. The chamber dimensions shall be such that they permit a minimum spacing of 6 inches (152.4 mm) between any two adjacent resistors and 4 inches (101.6 mm) between any resistor and the chamber walls. There shall be no circulating air over the resistors other than that created by the resistors. The method of support used to restrain the resistor body from rotating shall be such that it will minimize heat transfer through the support.

4.7.21.1.3 Procedure. After stability has been obtained, total resistance shall be measured as specified in 4.7.2, at rated ambient temperature. A dc potential sufficient to dissipate 25 percent of rated wattage, but not to exceed 100 volts shall be applied across the terminals (see 4.3.2). The resistive contact arm load, 100 times the nominal total resistance of the unit being tested, shall be chosen. The voltage specified above shall be applied intermittently, one and one-half hours “on” and one-half hour “off” for a total of 900 hours ±12 hours. The operating shaft shall be continuously rotated at ± 400 rpm. The direction of rotation shall be reversed every 15 minutes ±1 minute. For resistors with stops, the operating shaft shall be continuously cycled through not less than 95 percent of the mechanical travel at an average rate of 120 rpm ±20 rpm. This procedure shall be followed throughout the duration of the test. The total number of rotations to be performed for qualification shall be as specified in table V. If the rotational portion of the test is completed before 900 hours ±12 hours has elapsed, the shaft shall be positioned at approximately 40 percent of the output ratio, and the test will continue until 900 hours ±12 hours has elapsed. The total resistance shall be measured as specified in 4.7.2, in the test chamber, upon completion of 25 percent, 50 percent, 75 percent, and 100 percent of the test.

4.7.21.2 Dither. This test shall be performed on the remaining half of the samples.

4.7.21.2.1 Mounting. Resistors shall be mounted as specified in 4.7.21.1.1.

4.7.21.2.2 Test conditions. Test conditions shall be as described in 4.7.21.1.2.

4.7.21.2.3 Procedure. After stability has been obtained, total resistance shall be measured as specified in 4.7.2, at rated ambient temperature. One half of the rated dc continuous working voltage (see 4.3.2), but no more than 100 volts, shall be applied across the end terminals, and a resistive wiper load 100 times the nominal total resistance shall be connected between the wiper and CCW end terminals for the duration of the test. The contact arm shall be oscillated at the rate of 60 Hz ±5 Hz over a 5 degrees ±3 degrees total excursion. Unless otherwise specified, the duration of the test shall be related to the life characteristic (table V). At the conclusion of this period, the unit shall be rotated 100 shaft revolutions and then subjected to the output smoothness test (see 4.7.17).

4.7.21.3 Load. This test shall be performed on samples that have been subjected to the dither test.

4.7.21.3.1 Mounting. Resistors shall be mounted as specified in 4.7.21.1.1.

4.7.21.3.2 Test conditions. Test conditions shall be as specified in 4.7.21.1.2, except the shaft shall be positioned at approximately 40 percent of output ratio.

4.7.21.3.3 Procedure. After completion of tests specified in 4.7.21.2, the resistors shall be subjected to rated dc voltage (see 4.3.2). In no case shall the rated voltage exceed the maximum continuous working voltage specified (see 3.1). This potential shall be applied between end terminals, intermittently, one and one-half hours “on” and one-half hour “off”, for a total of 900 hours ±12 hours. Total resistance shall be measured as specified in 4.7.2, in the test chamber, at the end of the 1/2 hour “off” periods, after 100 hours ±12 hours, 250 hours ±12 hours, 500 hours ±12 hours, 750 hours ±12 hours, and 900 hours ±12 hours have elapsed. The resistors shall then be removed from the test chamber and within 24 hours ±4 hours after removal, the total resistance shall again be measured as specified in 4.7.2. The resistors shall also be examined for evidence of mechanical damage and open circuiting.

4.7.22 Low temperature operation (see 3.26). The contact arm shall be positioned at approximately 40 percent of the output ratio. The resistors shall be subjected to a temperature of -65°C, +0°C, -5°C for a period of 4 hours ±15 minutes. During this period, and after the resistors have been stabilized for 1 hour ±15 minutes, the total resistance shall be measured as specified in 4.7.2, and the rated voltage (see 4.3.2) shall be applied for 45 minutes between the end terminals. In no case shall the rated voltage exceed the maximum continuous working voltage specified (see 3.1). At the end of the 4-hour period, while the resistors are still in the chamber, starting-torque and total-resistance tests shall be performed as specified in 4.7.9 and 4.7.2, respectively. The electrical and mechanical connections shall then be examined for damage.

4.7.23 Low temperature exposure (see 3.27). The output ratio shall be measured as specified in 4.7.30. Resistors shall then be placed in a cold chamber at room temperature. The temperature shall be decreased to -65°C, +0°C, -5°C. Twenty-four hours after the resistors have reached this temperature, the temperature shall be gradually increased to room temperature within a period of not more than 8 hours. The resistors shall then be removed from the chamber and maintained at room temperature for a period of approximately 24 hours, after which the output ratio shall be measured as specified in 4.7.30. The resistors shall then be examined for evidence of mechanical damage.

4.7.24 High temperature exposure (see 3.28). The output ratio shall be measured as specified in 4.7.30, and the resistors shall be exposed to the maximum ambient temperature with zero load (table I), for a period of 1,000 hours ±12 hours. At least 2 hours after the end of the exposure period, the resistors shall be examined for evidence of mechanical damage, and the output ratio shall be measured at room ambient temperature as specified in 4.7.30.

4.7.25 Shock (specified pulse) (see 3.29). Resistors shall be tested in accordance with method 213 of MIL-STD-202. The following details and exception shall apply:

a. Special mounting means: Resistors shall be mounted by their normal mounting means on an appropriate mounting fixture, with the contact arm set at approximately 50 percent of electrical travel, and the shaft locked (locking device shall prevent rotational movement only and shall not restrict axial movement) at the start of the test. The mounting fixture shall be constructed in such a manner as to ensure that the mounting supports remain in a static condition with reference to the shock table. Also, resistors shall be mounted in such a manner that the stress applied is in the direction which would be considered most detrimental. The resistor mounting surface shall be considered the front of the resistor, and the terminal block shall be considered the top of the resistor. In one of the directions the resistor contact arm shall be positioned so that the applied stress tends to force it away from the resistance element.

b. Test condition: I (unless otherwise specified (see 6.2.3)).

c. Measurements during shock: Each resistor shall be monitored to determine momentary discontinuity of the element, and between the contact arm and element, by a method which shall at least be sensitive enough to monitor or register automatically any momentary discontinuity having a duration of 0.1 ms or less, as well as those of greater duration.

d. Examinations after shock: Resistors shall be examined for evidence of mechanical and electrical damage.

4.7.26 Vibration, high frequency (see 3.30). Resistors shall be tested in accordance with method 204 of MIL-STD-202. The following details and exceptions shall apply:

a. Mounting of specimens: Resistors shall be mounted by their normal mounting means on a vibration test jig. The contact arm shall be set at approximately 50 percent of electrical travel, and the operating shaft locked (locking device shall prevent rotational movement only and shall not restrict axial movement). The jig shall be constructed so as to preclude any resonances within the test range. Resistors shall be mounted in relation to the test equipment in such a manner that the stress applied is in the direction which would be considered most detrimental. In one of the directions, the resistor contact arm shall be positioned so that the applied stress tends to force it away from the resistance element.

b. Test condition: B (unless otherwise specified) (see 6.2.3).

c. Measurement during vibration: Each resistor shall be monitored to determine momentary discontinuity of the element, and between the contact arm and element, by a method which shall at least be sensitive enough to monitor or register, automatically any momentary discontinuity having a duration of 0.1 ms, as well as those of greater duration.

d. Measurements and examinations after vibration: Total resistance between end terminals shall be measured as specified in 4.7.2; resistors shall then be examined for evidence of mechanical and electrical damage.

4.7.27 Salt spray (corrosion) (see 3.31). Resistors shall be tested in accordance with method 101 of MIL-STD-202. The following details shall apply:

a. Special mounting: On an aluminum panel.

b. Test condition: A.

c. Examination after exposure: Resistors shall be thoroughly washed for 1 minute in free-running tap water, the temperature of which shall not exceed 38°C. The resistors shall then be placed in an oven maintained at 50°C ±3°C, for a period of 24 hours ±4 hours. At the end of this period, resistors shall be removed from the oven, disassembled, and examined for corrosion of internal surfaces.

4.7.28 Moisture resistance (see 3.32). Resistors shall be tested in accordance with method 106 of MIL-STD-202. The following details and exceptions shall apply:

a. Mounting: Resistors shall be mounted by their normal mounting means with the axis of the shaft in a horizontal plane on a 0.250 inch (6.35 mm) maximum-thick aluminum panel so that the resistor body shall not contact the floor of the test chamber.

b. Initial measurements: Total resistance shall be measured as specified in 4.7.2.

c. Loading and polarization voltage: One-half of the specimens shall be subjected to load and the remaining half to polarization.

(1) Load: During the first 2 hours of each of steps 1 and 4, rated dc wattage, shall be applied to each resistor. In no case shall the rated voltage exceed the maximum continuous working voltage specified (see 3.1). The negative terminal shall be grounded to the mounting surface of the panel.

(2) Polarization: During steps 1 through 6 inclusive, a 100-volt dc potential shall be applied with the positive side connected to the terminals tied together, and the negative side connected to the operating shaft.

d. Final measurements: The units shall be removed from the oven and exposed to room ambient without any artificial drying for a period not to exceed 1 hour. The total resistance and insulation resistance shall be measured as specified in 4.7.2 and 4.7.12 respectively. All final measurements shall be made within 2 hours after the 1-hour drying period.

4.7.29 Fungus (see 3.4.2). Resistors shall be tested in accordance with method 508 of MIL-STD-810. Resistors shall be examined for evidence of fungus.

4.7.30 Output ratio stability. Resistors shall be tested as follows:

a. Set up as shown on figure 8.

b. Set reference voltage divider to 0.451/0.449.

c. Move test potentiometer shaft to null the null indicator.

d. Lock shaft against rotation without loading the bearings.

e. Reset reference voltage divider to null the indicator.

f. Record reference voltage divider reading.

g. After environmental test, again set up as shown on figure 8, with same reference voltage divider and null indicator.

h. Repeat steps e and f.

i. The difference between readings in f and h is the output ratio change.

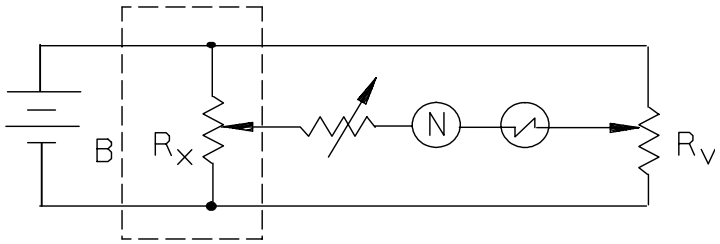

R_X = TEST SPECIMEN
N = NULL INDICATOR
R_V = VOLTAGE DIVIDER
B = DC VOLTAGE SOURCE

FIGURE 8. Output ratio stability.

4.7.30.1 Electrical equipment.

4.7.31.1.1 Voltage ratio equipment: The Kelvin-Variety voltage divider or a modification of it, is recommended for measurement of the output voltage ratio of precision potentiometers. The voltage dividers for precision potentiometers are usually of two types.

a. Decade voltage dividers (4 or 5 decades).

b. Digital ratiometers (4 or 5 places).

The decade voltage divider is used in conjunction with a null detector. The digital ratiometers are generally self-nulling with direct numerical readouts. The equipment accuracy, resolution, and repeatability must equal or be less than 10 percent of the specified tolerance. The voltage applied should never exceed the voltage/power rating of the test unit.

4.7.30.2 Output ratio measurement. Ten (10) volts ±3 volts dc with no limitations on voltage stability, current regulation or line regulation. If its capacity is sufficient for the current drawn by potentiometer, a battery may be used.

4.7.30.3 Balanced power supply for output ratio measurement. Ten (10) volts ±3 volts each side of center tap. Halves balance ± 0.01 percent; halves balance stability ±0.01 percent per hour. No requirements for voltage or current regulation, line regulation or total voltage, as long as balance is maintained.

5. PACKAGING.

5.1 Packaging. For acquisition purpose, the packaging requirements shall be as specified in the contract or order (see 6.2). When packaging of materiel is to be performed by DoD or in-house contractor personnel, these personnel need to contact the responsible packaging activity to ascertain packaging requirements. Packaging requirements are maintained by the Inventory Control Point's packaging activities within the Military Service or Defense Agency, or within the military services system commands. Packaging data retrieval is available from the managing Military Department's or Defense Agency's automated packaging files, CD-ROM products, or by contacting the responsible packaging activity.

6. NOTES

(This section contains information of a general or explanatory nature that may be helpful, but is not mandatory).

6.1 Intended use. The resistors covered by this specification are military unique due to the fact that these devices must be able to operate satisfactorily in military systems under the following demanding conditions: 15 Gs of high frequency vibration, 100 Gs of shock (specified pulse), 25,000 cycles of endurance at the maximum temperature, thermal shock (with no more than 5 percent deviation in initial resistance), low temperature coefficient of resistance, and resistant to salt corrosion. In addition, these military requirements are verified under a qualification system. Commercial components are not designed to withstand these military environmental conditions.

6.2 Acquisition requirements. Acquisition documents must specify the following.

6.2.1 Category I resistors (resistors covered by associated specifications, see 3.2.1).

a. Title, number, date of this specification, the applicable associated specification, and the complete PIN.

b. If not otherwise specified (see 2.1) the versions of the individual documents referenced will be those in effect on the date of release of the solicitation.

c. Packaging requirements (see section 5.1).

6.2.2 Category II resistors (see 3.2.2).

a. Title, number, date of this specification, the applicable associated specification, and the complete PIN.

b. If not otherwise specified (see 2.1) the versions of the individual documents referenced will be those in effect on the date of release of the solicitation.

c. Packaging requirements (see section 5.1).

d. Manufacturer's part number of category II items.

e. Associated variations within limits specified in 4.5.3 from category I resistor requirements as specified in associated specification.

f. Inspections, if any, to verify specified variations from category I resistor (see 4.4.2).

(1) Tests to be performed, requirements, and acceptance criteria.

(2) The laboratory at which inspection is to be performed.

(3) Sample size (3 are recommended).

(4) Submission of samples and data, if other than specified.

g. Conformance inspection will consist of groups A and B inspection and any other requirement if other than specified herein.

h. The packaging requirement (see section 5).

i. Acquisition documents will specify the applicable requirements and include a dimensional drawing as indicated in 6.2.3. In addition, the document will state that the unit is a category II item of MIL-PRF-39023. Acquisition of resistors will be limited to sources whose family of products is listed on the QPL for MIL-PRF-39023.

6.2.3 Category III resistors (see 3.2.3). For resistors not covered by associated specifications, the following will be specified.

a. Title, number, date of this specification, the applicable associated specification, and the complete PIN.

b. If not otherwise specified (see 2.1) the versions of the individual documents referenced will be those in effect on the date of release of the solicitation.

c. Packaging requirements (see 5.1).

d. Physical dimensions (see 3.5), (see figure 9).

e. Shaft style and length (see 3.5.1).

f. Phasing (see 3.5.3).

g. Terminals: Number and location (see 3.5.4).

h. Taps (see 3.5.4 and 3.14)

(1) Number and location.

(2) Width.

(3) Tolerance.

i. Shaft end play: _____ (see 3.11).

j. Maximum starting torque: _____ ounce-inches (see 3.13.1).

k. Total resistance: _____ ohms (see 3.6).

l End voltage: _____ (see 3.20).

m. Type of function conformity, and conformity tolerance for linear conformity. (See table XV for linear conformity accuracy of measurement (see 3.17)).

n. Conformity tolerance and accuracy of measurement for nonlinear conformity (see 3.17 and 4.7.13).

o. Conformity-tolerance test load: _____ ohms.

p. Effective electrical travel: _____ degrees + _____ degrees - _____ degrees (see 4.7.13).

q. Electrical overtravel: _____ degrees.

r. Mechanical backlash: _____ degrees.

s. Thermal shock (change in total resistance): _____ percent (see 3.23).

t. Resistance-temperature characteristic: + _____ percent (see 3.24).

u. Life (change in total resistance): _____ percent (see 3.25).

v. Low-temperature operation (change in total resistance): _____ percent (see 3.26).

w. Low-temperature exposure (change in total resistance): _____ percent (see 3.27).

x. High-temperature exposure (change in total resistance): _____ percent (see 3.28).

y. Moisture resistance (see 3.32).

(1) Change in total resistance: _____ percent

(2) Insulation resistance: _____ megohms.

z. Terminal strength pull: _____ (see 4.7.18).

aa. Theoretical function, function formula, or point-by-point information, as applicable.

ab. Resistor output-load configuration: _____ ohms.

ac. Maximum contact-arm current: _____ amperes.

ad. Maximum continuous working voltage: ac or dc _____volts.

ae. Dielectric withstanding voltage: ac or dc _____ volts.

af. Wattage: _____ watts.

ag. Total impedance and test method.

ah. Life: _____ rotations, _____ reversals, _____ hours.

ai. Application (circuit diagram).

aj. Rotation as viewed from shaft end: _____.

ak. Rotational speed: _____ rpm.

al. Weight limitation.

am. Space limitation.

an. Bearing information.

ao. Levels of preservation and packaging and packing, and applicable marking (see section 5).

ap. Maximum operating temperature: _____ ^{O}C.

aq. Any other requirement applicable that is not listed above.

6.3 Qualification. With respect to products requiring qualification, awards will be made only for products which are, at the time of award of contract, qualified for inclusion in the QPL whether or not such products have actually been so listed by that date. The attention of the contractors is called to these requirements, and manufacturers are urged to arrange to have their products that they propose to offer to the Federal Government tested for qualification in order that they may be eligible to be awarded contracts or orders for the products covered by this specification. Information pertaining to qualification of products is the Defense Supply Center, Columbus, ATTN: DSCC-VQP, 3990 East Broad Street, Columbus, OH 43216-5001.

6.4 Government verification inspection. Verification inspection by the Government will be limited to the amount deemed necessary to determine compliance with the contract or order, and will be limited in severity to the definitive conformance assurance provisions established in this specification and the contract or order. The amount of verification inspection by the Government will be adjusted to make maximum utilization of the supplier's quality-control system and the quality history of the product.

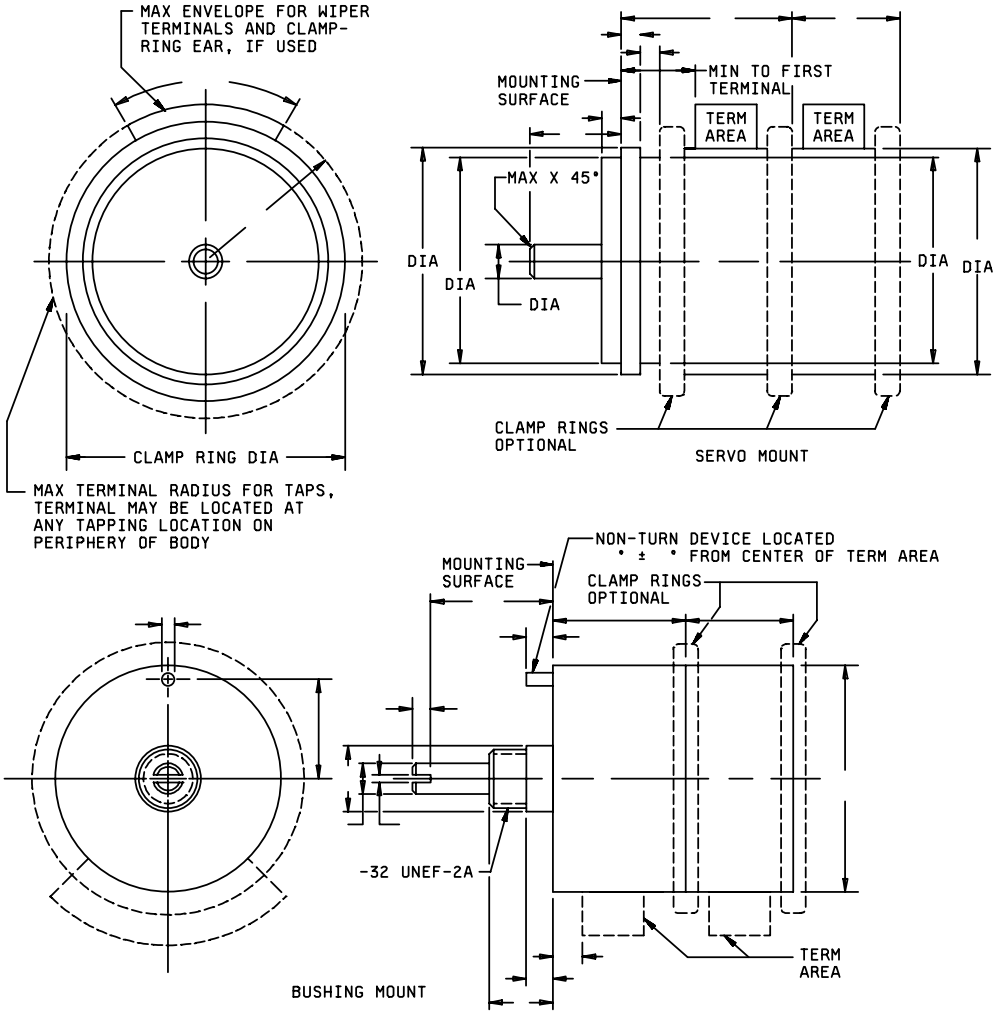

FIGURE 9. Dimensions and drawing information.

6.5 Derating. If it is desired to operate resistors at an ambient temperature greater than ambient temperature with rated load, the resistors shall be derated linearity in accordance with figure 10.

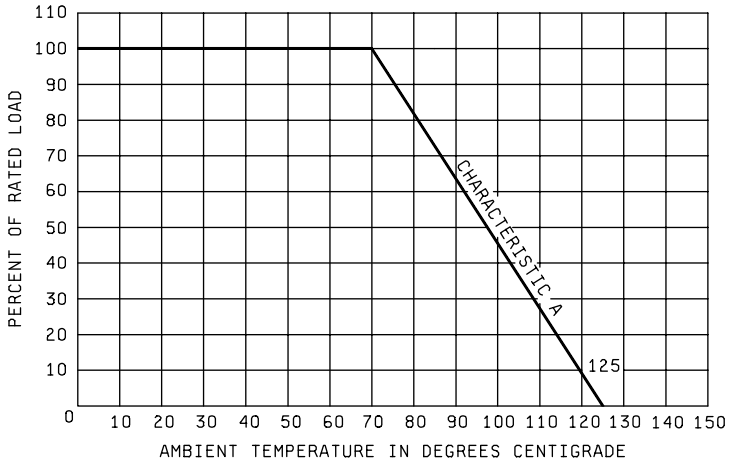

FIGURE 10. Derating curves for high ambient temperatures.

6.6 Voltage rating. The formula specified in 4.3.2 is correct only when voltage is applied to the fixed end terminals, with the contact arm and taps open circuited. When current is drawn from the contact arm or taps, power dissipation is not uniform along the resistance element.

6.7 General terms.

a. Precision potentiometer: A mechanical-electrical transducer dependent upon the relative position of a moving contact (wiper) and a resistance element for its operation. It delivers to a high degree of accuracy a voltage output that is some specified function of applied voltage and shaft position, (see figure 11).

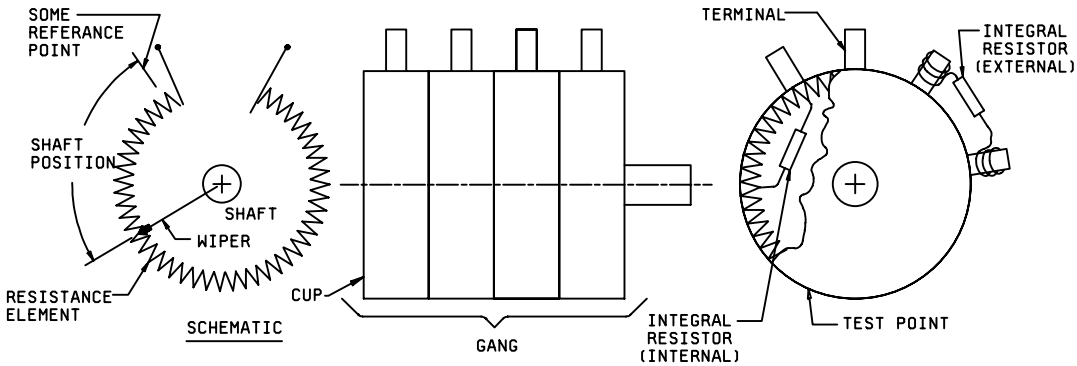

FIGURE 11. Precision potentiometer.

b. Cup: A single mechanical section of a potentiometer which may contain one or more electrical resistance elements.

c. Gang: An assembly of two or more cups on a common operating shaft.

d. Shaft: The mechanical input element of the potentiometer.

e. Shaft position: An indication of the position of the wiper relative to a reference point.

f. Terminal: An external member that provides electrical access to the potentiometer resistance element and wiper.

g. Integral resistor: An internal or external resistor preconnected to the electrical element and forming an integral part of the cup assembly to provide a desired electrical characteristic. The resistor may be a separate entity, a part of the wirewound or nonwirewound resistance element, or a layer type resistor formed on the same insulating substrate as the resistance element.

h. Test point: An additional terminal used only to facilitate measurement.

I. Tap: An electrical connection fixed to the resistance element and capable of carrying rated element current.

NOTE: Certain types of taps (minimum width) essential for tighter conformities may require lower current limits. These taps are referred to as voltage taps.

j. Dead space: A region of the resistance element constructed to provide a discontinuity in the output. The dead space is usually found between the input terminals of a continuous rotation single turn potentiometer.

k. Total applied voltage (E): The total voltage applied between the designated input terminals, (see figure 12).

NOTE: When plus (+) and minus (-) voltages are applied to the potentiometer, the total applied voltage (commonly called peak-to-peak applied voltage) is equal to the sum of the two voltages. Each individual voltage is referred to as zero-to-peak applied voltage

l. Output voltage: The voltage between the wiper and the designated reference point. Unless otherwise specified, the designated reference point is the CCW terminal.

m. Output ratio: The ratio of the output voltage to the designated input reference voltage is the total applied voltage.

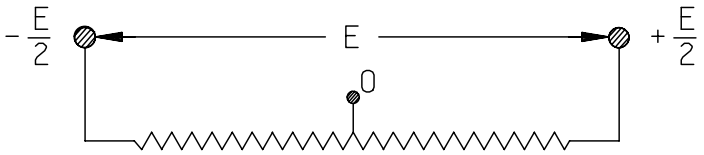

E = TOTAL APPLIED VOLTAGE
(PEAK TO PEAK APPLIED VOLTAGE)

$\frac{E}{2}$ = ZERO-TO-PEAK APPLIED VOLTAGE

FIGURE 12. Total applied voltage.

n. Total variable output: The difference between the maximum and minimum output ratios. These ratios correspond to the minimum voltages at each input terminal.

o. End voltage: The voltage between the wiper terminal and an end terminal when the shaft is positioned at the corresponding theoretical end point. End voltage is expressed as a percent of the total applied voltage.

p. Minimum voltage: The smallest or lowest voltage between the wiper terminal and an end terminal when the shaft is positioned near the corresponding end of electrical continuity travel. Minimum voltage is expressed as a percent of the total applied voltage.

q. Shorted segment: A portion of the resistance element over which the output ratio remains constant within specified limits as the wiper traverses the segment with a specified load resistance.

r. Output slope: The ratio between the rate of change of output ratio and the rate of change of shaft travel.

$$\text{MATHEMATIC ALLY}: A = \frac{\Delta \frac{e}{E}}{\Delta \frac{\theta}{\theta_T}}$$

θ_A may be substituted for θ_T where applicable.

NOTE: The theoretical output slope is the first derivative of the normalized theoretical function characteristic.

$$\text{MATHEMATICALLY: } A = \frac{df\left[\frac{\theta}{\theta_T}\right]}{d\left[\frac{\theta}{\theta_T}\right]} = \frac{d\left[\frac{e}{E}\right]}{d\left[\frac{\theta}{\theta_T}\right]}$$

s. Slope ratio: The ratio of the largest to the smallest output slopes of a monotonic theoretical function characteristic.

t. Gradient: The rate of change of output ratio relative to shaft travel.

$$\text{MATHEMATICALLY: } G = \frac{d\left[\frac{e}{E}\right]}{d\theta}$$

u. Load resistance (RL): The external resistance as seen by the output voltage; (connected between the wiper and the designated reference point).

NOTE: No load means an infinite load resistance.

v. Loading error: The difference between the output ratio with an infinite load resistance and the output ratio with a specified finite load resistance, at any shaft position as long as it is the same position for both output ratio measurements, (see figure 13).

NOTE: Elimination of loading error, by compensating the resistance element to give the desired output with a specified load resistance, is referred to as “load compensation.”

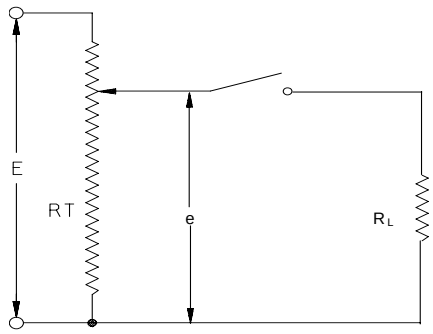

FIGURE 13. Loading error.

w. Direction of travel: For rotary potentiometers, CW or CCW when viewing the specified mounting end of the potentiometer. The designation of terminals in the figure corresponds to the direction of shaft travel. Unless otherwise specified (see figure 14), the output ratio and shaft position increase with CW (or extending) direction of travel.

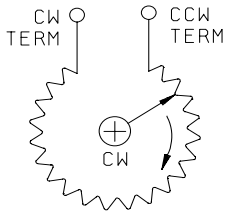

View of shaft and element
from specified mounting end

FIGURE 14. Direction of travel.

x. Total mechanical travel: The total travel of the shaft between integral stops, under specified stop load. In potentiometers without stops, the mechanical travel is continuous.

y. Mechanical overtravel. The shaft travel between each theoretical end point and its adjacent corresponding limit of total mechanical travel, (see figure 15).

NOTE: The relationship of the electrical travels to each other and to the input terminals shown above is given for illustration only and may vary from one potentiometer to another.

z. Backlash: the maximum difference in shaft position that occurs when the shaft is moved to the same actual output ratio point from opposite directions.

aa. Theoretical end point: The shaft positions corresponding to the end of the theoretical electrical travel as determined from the index point.

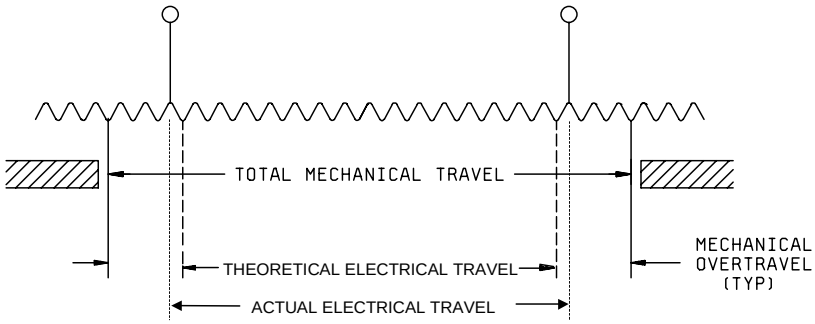

FIGURE 15. Mechanical overtravel.

ab. Index point: A point of reference fixing the relationship between a specified shaft position and the output ratio. It is used to establish a shaft position reference, (see figure 16).

ac. Theoretical electrical travel: The specified shaft travel over which the theoretical function characteristic extends between defined output ratio limits, as determined from the index point.

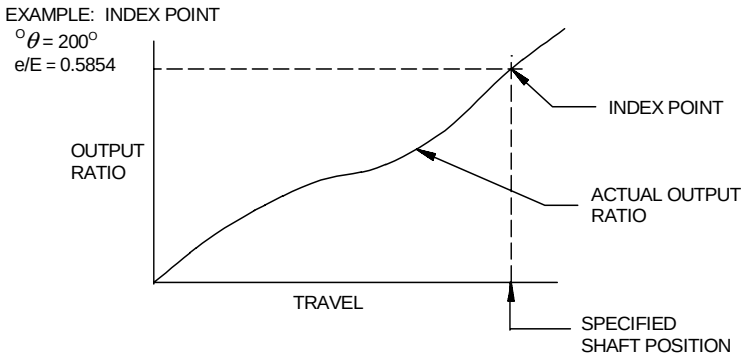

FIGURE 16. Index point.

ad. Electrical overtravel: The shaft travel over which there is continuity between the wiper terminal and the resistance element beyond each end of the theoretical electrical travel.

ae. Electrical continuity travel: The total travel of the shaft over which electrical continuity is maintained between the wiper and the resistance element.

af. Tap location: The position of a tap relative to some reference. This is commonly expressed in terms of an output ratio and a shaft position. When a shaft position is specified, the tap location is the center of the effective tap width.

ag. Effective tap width: The travel of the shaft during which the voltage at the wiper terminal and the tap terminal are the same, as the wiper is moved past the tap in one direction.

NOTE: In some instances, the tap width may be essentially zero (i.e., no flat zone), but the tap may have a significant effect on conformity. In these cases the term “effective tap width” should not be applied. Instead, the effect of the tap on the output characteristics should be considered in terms of conformity.

ah. Phasing: The relative alignment of the phasing points of each cup of a gang potentiometer.

NOTE: Unless otherwise specified, phasing requirements apply to a single specified phasing point in each cup, and all cups are aligned to the phasing point of the first cup.

ai. Total resistance (dc input impedance): The dc resistance between the input terminals with the shaft positioned so as to give a maximum resistance value.

aj. DC output impedance: The maximum dc resistance between the wiper and either end terminal with the input shorted.

ak. Minimum resistance: Refer to tap resistance or minimum voltage for applicable definition

al. End resistance: Refer to end voltage for applicable definition.

am. Tap resistance: The minimum resistance obtainable between a tap terminal and a wiper position on the resistance element, measured without drawing wiper current.

an. Apparent contact resistance: Refer to output smoothness.

ao. Equivalent noise resistance: Refer to output smoothness.

ap. Function characteristic: The relationship between the output ratio and the shaft position.

$$\text{MATHEMATICALLY: } \frac{e}{E} = f(\theta)$$

aq. Conformity: The fidelity of the relationship between the actual function characteristic and the theoretical function characteristic.

ar. Absolute conformity: The maximum deviation of the actual function characteristic from a fully defined theoretical function characteristic. It is expressed as a percentage of the total applied voltage and measured over the theoretical electrical travel. An index point on the actual output is required.

$$\text{MATHEMATICALLY: } \frac{e}{E} f\left[\frac{\theta}{\theta_T}\right] \pm C; 0 \le \theta \le \theta_T$$

NOTE: The theoretical function characteristic is assumed to be a smooth curve when it can be described by a mathematical expression. When empirical data are provided, the points are assumed to be joined by straight line segments.

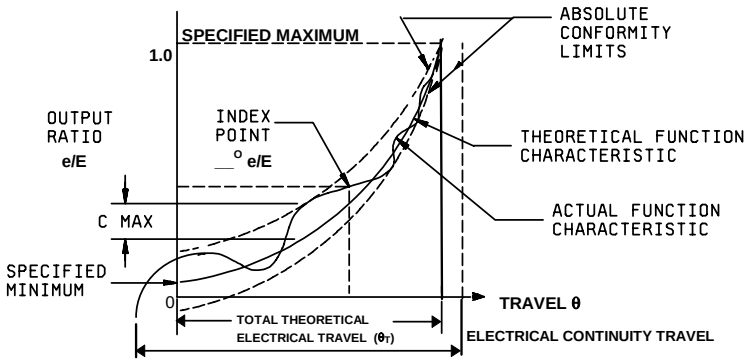

FIGURE 17. Absolute conformity.

as. Linearity: A specific type of conformity where the theoretical function characteristic is a straight line.

$$\text{MATHEMATICALLY: } \frac{e}{E} = f(\theta) \pm C = A(\theta) + B \pm C$$

Where:

A = given slope
B = given intercept at θ = 0

at. Absolute linearity: The maximum deviation of the actual function characteristic from a fully defined straight reference line. It is expressed as a percentage of the total applied voltage and measured over the theoretical electrical travel. An index point on the actual output is required. The straight reference line maybe fully defined by specifying the low and high theoretical end output ratios separated by the theoretical electrical travel. Unless otherwise specified, these end output ratios are 0.0 and 1.0, respectively.

$$\text{MATHEMATICALLY: } \frac{e}{E} = A\left[\frac{\theta}{\theta_T}\right] + B \pm C$$

Where:

A = given slope
B = given intercept at θ = 0.
Unless otherwise specified: A = 1; B = 0.

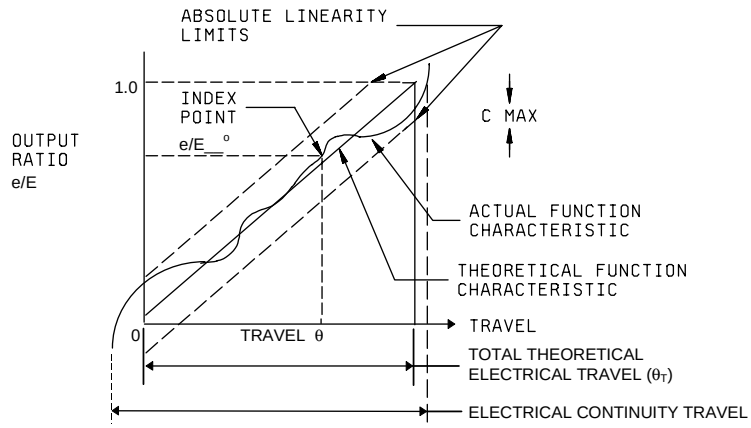

FIGURE 18. Absolute linearity.

au. Independent linearity: The maximum deviation of the actual function characteristics from a straight reference line with its slope and position chosen to minimize the maximum deviations. It is expressed as a percentage of the total applied voltage and is measured over the specified theoretical electrical travel. The slope of the reference line, if limited, must be separately specified. An index point on the actual output is required. Unless otherwise specified, the index point will be at θ = 180 degrees.

MATHEMATICALLY: $\frac{e}{E} = P\left[\frac{\theta}{\theta_T}\right] + Q \pm C$

Where:

P = unspecified slope;
Q = unspecified intercept at θ = 0.
And both are chosen to minimize C but are limited by the end voltage requirements.

av. Constant limits: Permissible conformity deviations specified as a percentage of the total applied voltage.

NOTE: Unless otherwise specified, all definitions in this document employ constant limits.

aw. Zero-to-peak constant limits: Permissible conformity deviations specified as a percentage of zero-to-peak applied voltage.

NOTE: The numerical value of zero-to-peak errors is double that of equal peak-to-peak errors, because the reference zero-to-peak applied voltage is one-half of the total (peak-to-peak) applied voltage.

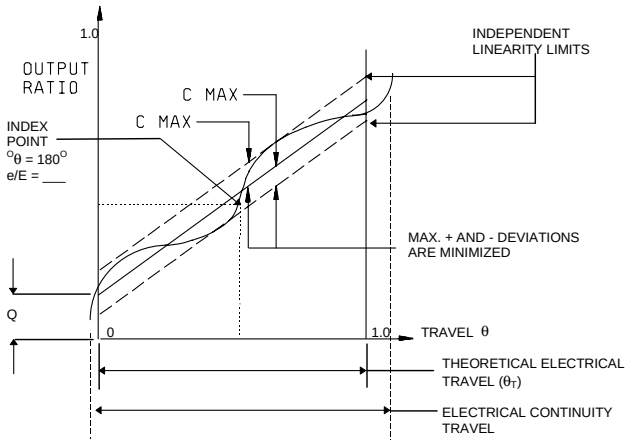

FIGURE 19. Independent linearity.

ax. Proportional limits: Permissible conformity deviations specified as a percentage of the theoretical output ratio at the point of measurement.

NOTE: Proportional limits may become impossibly restrictive in the vicinity of zero theoretical output and should be modified to provide a practical tolerance in that region, if the theoretical output ratio approaches zero.

ay. Modified proportional limits: Any combination of constant and proportional limits.

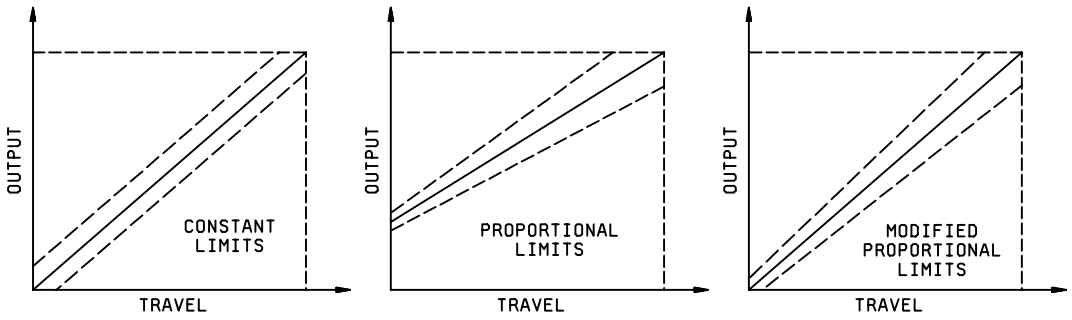

FIGURE 20. Tolerance limits.

az. Simultaneous conformity phasing: The relative alignment of the cups of a gang potentiometer, from a common index point, such that the output ratios of all cups fall within their respective conformity limits over the theoretical electrical travel.

ba. Voltage tracking error: The difference, at any shaft position, between the output ratios of any two commonly actuated similar electrical elements, expressed as a percentage of the single total voltage applied to them.

bb. Output smoothness: Output smoothness is a measurement of any spurious variation in the electrical output not present in the input. It is expressed as a percentage of the total applied voltage and measured for specified travel increments over the theoretical electrical travel. Output smoothness includes effects of contact resistance variations, resolution, and other micro-nonlinearities in the output.

bc. Resolution: A measure of the sensitivity to which the output ratio of the potentiometer may be set.

bd. Voltage resolution: The maximum incremental change in output ratio with shaft travel in one direction in any specified portion of the resistance element.

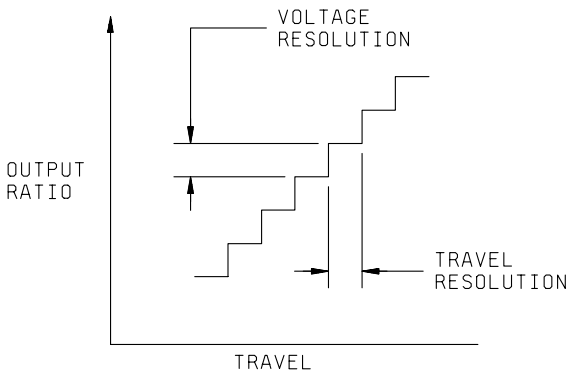

FIGURE 21. Wirewound resolution.

NOTE: The illustration above is valid only for wirewound potentiometers because of the “stepped” nature of the output function. For determination of the effects of resolution in a nonwirewound potentiometer, refer to output smoothness.

be. Dielectric strength: Ability to withstand under prescribed conditions, a specified potential of a given characteristic between the terminals of each cup and the exposed conducting surfaces of the potentiometer, or between the terminals of each cup and the terminals of every other cup in the gang without exceeding a specified leakage current value.

bf. Insulation resistance: The resistance to a specified impressed dc voltage between the terminals of each cup and the exposed conducting surfaces of the potentiometer, or between the terminals of each cup and the terminals of every other cup in the gang, under prescribed conditions.

bg. Power rating: The maximum power that a potentiometer can dissipate under specified conditions while meeting specified performance requirements.

bh. Power derating: The modification of the nominal power rating for various considerations such as load resistance, output slopes, ganging, nonstandard environmental conditions, and other factors.

bi. Life: The number of shaft revolutions or translations obtainable under specific operating conditions and within specified allowable degradation of specific characteristics.

bj. Total input impedance: The impedance between the two input terminals with open circuit between output terminals, and measured at a specified voltage and frequency with the shaft positioned to give a maximum value.

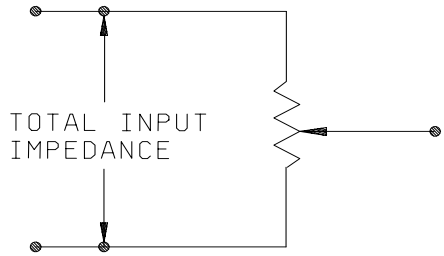

FIGURE 22. Total input impedance.

bk. Output impedance: Maximum impedance between slider and either end terminal with the input shorted, and measured at a specified voltage and frequency.

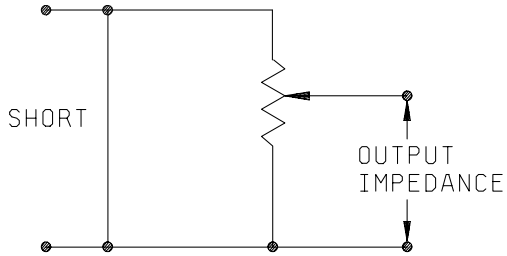

FIGURE 23. Output impedance.

bl. Quadrature voltage: The maximum value of that portion of the output voltage which is ± 90° out of time phase with the input voltage, expressed as volts-per-volt applied, measured at a specified input voltage and frequency.

bm. Phase shift: The phase difference, expressed in degrees, between the sinusoidal input and output voltages measured at a specified input voltage and frequency with the shaft at a specified position.

$$\text{MATHEMATICALLY: } \Phi = \text{SIN}^{-1}\left[\frac{e_q}{e}\right] = \text{TAN}^{-1}\left[\frac{e_q}{e_1}\right]$$

Where:

ϕ = Phase shift in degrees
e_q = Quadrature voltage
e_1 = Inphase output voltage
e = Output voltage

bn. Shaft runout: The eccentricity of the shaft diameter with respect to the rotational axis of the shaft, measured at a specified distance from the end of the shaft. The body of the potentiometer is held fixed, and the shaft is rotated with a specified load applied radially to the shaft. The eccentricity is expressed in inches, TIR.

bo. Lateral runout: The perpendicularly of the mounting surface with respect to the rotational axis of the shaft, measured on the mounting surface at a specified distance from the outside edge of the mounting surface. The shaft is held fixed, and the body of the potentiometer is rotated with specified loads applied radially and axially to the body of the pot. The lateral runout is expressed in inches, TIR.

bp. Pilot diameter runout: The eccentricity of the pilot diameter with respect to the rotational axis of the shaft, measured on the pilot diameter. The shaft is held fixed, and the body of the potentiometer is rotated with a specified load applied radially to the body of the pot. The eccentricity is expressed in inches, TIR.

bq. Shaft radial play: The total radial excursion of the shaft, measured at a specified distance from the front surface of the unit. A specified radial load is applied alternately in opposite directions at a specified point. Shaft radial play is expressed in inches.

br. Shaft end play: The total axial excursion of the shelf, measured at the end of the shaft with a specified axial load supplied alternately in opposite directions. Shaft end play is expressed in inches.

bs. Starting torque: The maximum moment in the clockwise and counterclockwise directions required to initiate shaft rotation anywhere in the total mechanical travel.

bt. Running torque: The maximum moment in the clockwise and counterclockwise directions required to sustain uniform shaft rotation at a specified speed throughout the total mechanical travel.

bu. Moment of inertia: The mass moment of inertia of the rotating elements of the potentiometer about their rotational axis.

bv. Static stop strength: The maximum static load that can be applied to the shaft at each mechanical stop for a specified period of time without permanent change of the stop positions greater than specified.

bw. Dynamic stop strength: The inertia load, at a specified shaft velocity and a specified number of impacts, that can be applied to the shaft at each stop without a permanent change of the stop position greater than specified.

6.8 Power rating. The power rating of the units is based on the use of the chassis as specified in the life test.

6.9 PIN. This specification requires a PIN that describes technology and appropriate references to associated documents (see 1.2.1 and 3.1).

6.10 Subject term (key word) listing.

Cup
Linear
Multisection
Multiturn
Nonlinear
Single turn

6.11 Environmentally preferable material. Environmentally preferable materials should be used to the maximum extent possible to meet the requirements of this specification. Table XVIII lists the Environmental Protection Agency (EPA) top seventeen hazardous materials targeted for major usage reduction. Unless needed to meet the requirements specified herein (see section 3), use of these materials should be minimized or eliminated.

TABLE XVIII. EPA top seventeen hazardous materials.

Benzene	Dichloromethane	Tetrachloroethylene
Cadmium and Compounds	Lead and Compounds	Toluene
Carbon Tetrachloride	Mercury and Compounds	1,1,1 - Trichoroethane
Chloroform	Methyl Ethyl Ketone	Trichloroethylene
Chromium and Compounds	Methyl Isobutyl Ketone	Xylenes
Cyanide and Compounds	Nickel and Compounds	

6.12 Changes from previous issue. Marginal notations are not used in this revision to identify changes with respect to the previous issue due to the extensiveness of the changes.

APPENDIX A

PROCEDURE FOR QUALIFICATION INSPECTION

A.1. SCOPE

A.1.1 Scope. This appendix details the procedure for submission of samples, with related data, for qualification inspection of category I resistors covered by this specification. The procedure for extending qualification of the required sample to other resistors covered by this specification is also outlined herein. This appendix is a mandatory part of this specification. The information contained herein is intended for compliance only.

A.2 APPLICABLE DOCUMENTS. This section is not applicable to this appendix.

A.3 SUBMISSION

A.3.1 Sample. A sample consisting of 19 sample units shall be submitted in accordance with table A-I in each style, or style representing a group (see table A-II), lowest moisture resistance, and highest life characteristic, for which qualification is sought. When servo-mounted types are submitted for qualification, and qualification is desired for bushing-mounted units of the same physical size and construction (except for faceplate), three additional sample units with bushing mounts will be submitted. In a like manner, three additional sample units with servo mounts shall be submitted, when bushing types are submitted for qualification.

TABLE A-I. Requirements for qualification sample.

Description	Requirement	
	Single-turn	Multi-turn
Linear		
Theoretical electrical travel	Standard for style	Standard for style
Total mechanical travel	Continuous	
Shaft style and length (from mounting surface)	1 inch (round)	1 inch (round)
Total resistance (ohms)		
0.87 - inch diameter	10,000	20,000
1.06 - inch diameter	10,000	30,000
1.44 - inch diameter	20,000	30,000
2.00 - inch diameter	20,000	50,000
3.00 - inch diameter	30,000	50,000
Resistance tolerance	10 percent	10 percent
Output smoothness	0.5 percent	0.5 percent
Function conformity tolerance	0.5 percent	0.5 percent

A.3.2. Test results. Each submission shall be accompanied by test results covering the nondestructive tests listed in table X which have been performed on the submitted sample units. The performance of the destructive tests by the supplier on a duplicate set of sample units is encouraged, although not required. All test results shall be submitted in duplicate.

A.3.3 Certification of material. When submitting samples for qualification, the supplier shall submit certification, in duplicate, that the materials used in his components are in accordance with the applicable specification requirements.

A.3.4 Description of items. The supplier shall submit a detailed description of the resistors being submitted for inspection, including case material, shaft, terminals, and mounting hardware.

A.3.5 Similarity to standard resistors having qualification (see 3.2.2 and 3.2.3). Qualification of a modified standard resistor based upon its similarity to a standard resistor that has passed the qualification requirements of table X, may be established when the Government is satisfied that the resistors are similar both mechanically and electrically to a standard resistor. Similarity between the standard resistor and the modified standard resistor shall be based on the following:

a. Materials: Same materials, similar interface and physical dimensions; specifically, shaft, conductor element, and case materials shall be considered similar.

b. Linearity: Linearity equal to or greater than that of the standard shall be similar for any type of linearity defined in section 6.

c. Theoretical electrical travel: When the change is greater than 10 percent of the standard unit, the power rating must be reduced in approximately the same proportion as the resistors.

d. Taps: There shall be a limit of five taps per cup.

e. Mechanical travel: On single-turn units, those with stops shall be allowed without affecting qualification. The 10-turn units shall be accepted without affecting qualification as long as they are within one full turn.

f. Shaft length, external diameter, and configuration: Shall be considered similar.

g. Resistance tolerance: All resistance tolerances shall be considered similar.

h. Running and starting torque: Only those torques within specification limits shall be considered similar.

i. Shaft end play: Only those end plays within specification limits shall be considered similar.

j. Servo mounts: All configuration, type, interface and physical dimensions shall be considered similar.

k. Nominal ambient temperature: Nominal ambient temperature the same or lower than the standard shall be considered similar.

l. Nominal operating temperature: Nominal operating temperatures the same or lower than the standard shall be considered similar.

m. Case dimensions: Case dimensions not greater than 150 percent nor less than 70 percent of the corresponding standard units shall be considered similar.

n. Wattage rating: Wattage ratings the same or lower than the standard shall be considered similar.

o. Output smoothness: Output smoothness content the same or greater than the standard shall be considered similar.

p. Life: Life the same or lower than the standard shall be considered similar.

A.4 EXTENT OF QUALIFICATION

A.4.1 Extent of qualification. The extent of qualification shall be as indicated in table A-II, and shall cover a resistance range and function conformity above and below those values submitted for qualification inspection, provided the units are of the same general materials and construction.

TABLE A-II. Extension of qualification.

Style	Will qualify style	Qualification of moisture resistance and life characteristic	Will qualify	
			Moisture resistance	Life
RQ090	RQ090	1	1, 2, 3	
	RQ110	2	2, 3	
	RQ150	3	3	
	RQ200	1		
	RQ300	2		1
RQ110	RQ110	3		1, 2
RQ150	RQ150	4		1, 2, 3
	RQ200			1, 2, 3, 4
	RQ300			
RQ300	RQ300			
RQ100	RQ100			
	RQ160			
	RQ210			
RQ160	RQ160			
	RQ210			
RQ210	RQ210	Qualify output smoothness and functional conformity	Output smoothness	Functional conformity
		B	A - E	A - F

APPENDIX B

TEST PROCEDURES FOR CONFORMITY (OTHER THAN INDEPENDENT) AND FOR CONTINUOUS RECORDING OF INDEPENDENT LINEARITY

B.1 SCOPE

B.1.1 Scope. This appendix outlines the test procedures to be used if the conformity required is other than independent linearity (point by point check). This appendix is given for information purposes only, for items that are acquired to this document, but are not the category I items listed in supplement 1. In no case will the category I item be other than independent linearity. This appendix is not a mandatory part of this specification. The information contained herein is intended for guidance only.

B.2 APPLICABLE DOCUMENTS. This section is not applicable to this appendix.

B.3 CONFORMITY AND LINEARITY+

B.3.1 Absolute conformity.

B.3.1.1 Test procedure. Mount the potentiometer in the travel measuring device and connect electrically to the voltage ratio equipment. Set the pot shaft to the index point. Then move the shaft to the beginning of the theoretical electrical travel. The index point and beginning of theoretical electrical travel must be approached from the same direction to eliminate effects of backlash. Continuing in the same direction, compare the actual output ratio of the test potentiometer to the theoretical function output ratio and note deviations for each shaft position. When an empirical function is specified, the deviations are noted at the given data points only. When the function is described by a mathematical equation, deviations are noted at every 3.5 percent of theoretical electrical travel or 45 degrees, whichever is less. The maximum deviation from the theoretical, expressed as a percentage of the total applied voltage, is the absolute conformity.

NOTE: In no case should the applied voltage exceed the voltage or power rating of the unit being tested.

B.3.1.2 Alternate procedure. If a master of sufficient accuracy is available, test by the same procedure used for absolute linearity, substituting the proper nonlinear master for the linear master.

B.3.2 Absolute linearity.

B.3.2.1 Test procedure-continuous method. Locate the index point using the conformity tester as a travel measuring device. Disconnect the voltage ratio equipment and electrically connect the test potentiometer to the conformity tester as shown on figure C-I, and proceed as follows:

a. With switch in position 1, adjust recorder to null at center of chart.

b. With switch in position 6:

(1) Move the travel indicator to the Beta limit of theoretical electrical travel.

(2) By external means, short the slider terminal to the Beta terminal of the potentiometer under test.

(3) Adjust “BAL AT BETA” control to produce a null on the recorder.

(4) Remove the jumper (step 2) and move the travel indicator to the Alpha limit of theoretical electrical travel.

(5) By external means, short the slider terminal to the Alpha terminal of the potentiometer under test.

(6) Adjust “BAL AT ALPHA” control to produce a null on the recorder.

(7) Remove the jumper (step 5).

NOTE: Since “BAL” controls interact to some extent, it may be necessary to repeat step B until no further adjustment is needed.

c. With switch in position 2 or 3 as desired, adjust recorder gain to produce desired deflection.

d. After completing balancing and calibrating operations, set switch to position 6 and move the travel indicator over the full extent of the theoretical electrical travel in the specified direction at a uniform speed noting linearity deviations on the recorder. The maximum deviation from the reference line, expresses in percent, is the absolute linearity.

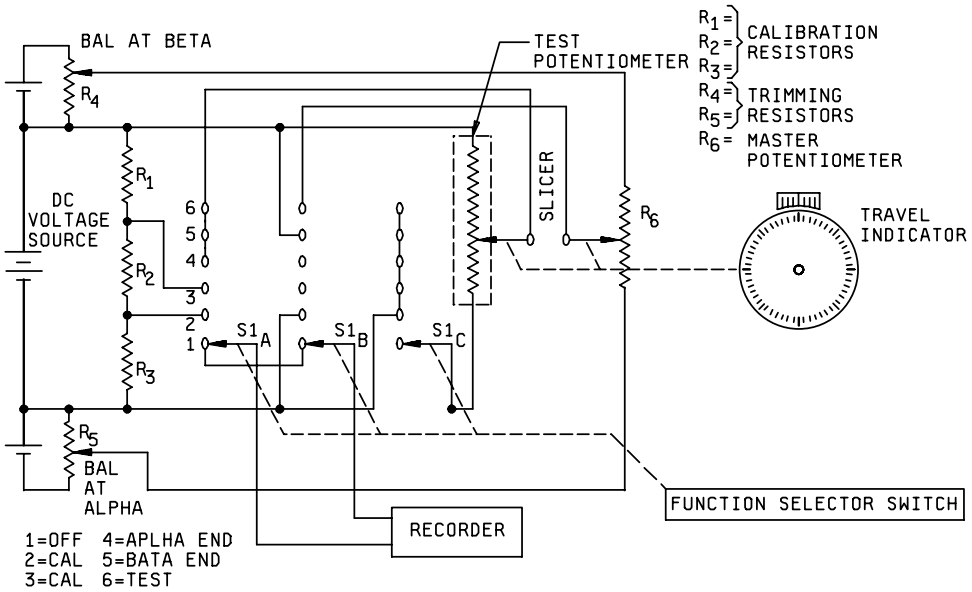

FIGURE B-I. Conformity tester.

B.3.2.2 Test procedure-point-by-point method. The point-by-point method for testing absolute linearity is the same as the procedure for absolute conformity with the function described by a linear equation.

B.3.3 Independent linearity.

B.3.3.1 Test procedure. Locate the index point using the conformity tester as the travel measuring device. Disconnect the voltage ratio equipment, electrically connect the test pot to the conformity tester as shown on figure B-I and proceed, as follows:

a. With switch in position 1, adjust recorder to null at center of chart.

b. With switch in position 6:

(1) Move the travel indicator to the Beta limit of theoretical electrical travel.

(2) Adjust “BAL AT BETA” control to produce a null on the recorder.

(3) Move the travel indicator to the Alpha limit of theoretical electrical travel.

(4). Adjust “BAL AT ALPHA” control to produce a null on the recorder.

(5) Because of the possible interaction of the BAL controls, repeat steps 1 through 4 until no further adjustment is necessary.

c. With switch in position 2 or 3 as desired, adjust recorder gain to produce desired deflection.

d. After completing balancing and calibration, set selector switch to position 6, and move the travel indicator over the full theoretical electrical travel, in the specified direction at a uniform speed, noting the linearity deviations on the recorder.

Referring to figure B-II, determine independent linearity by drawing the best straight line through the recording so as to minimize the maximum positive and negative deviations from the line irrespective of position or slope. Draw lines parallel to this reference line through the maximum deviations from it to establish the limits of the independent linearity. Express as a percent of total applied voltage.

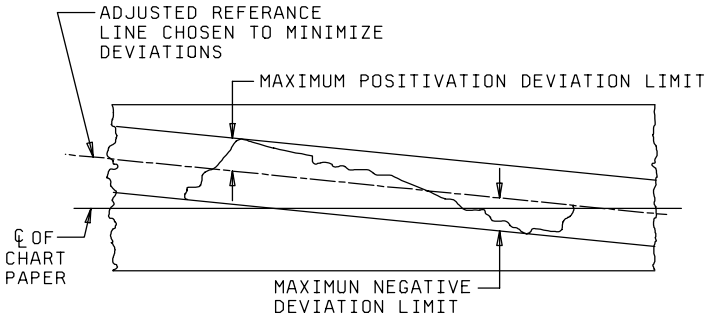

FIGURE B-II. Determination of independent linearity.

NOTE: If point-by-point method is used, the best straight line must be determined graphically by plotting.

Custodians:
Army - CR
Navy - EC
Air Force - 11

Preparing activity
DLA - CC

(Project 5905-2005)

Review activities:
Army - AR, AT, AV, CR4, MI
Navy - AS, CG, MC, OS
Air Force - 19

NOTE: the activities listed above were interested in this document as of the date of this document. Since organizations and responsibilities can change, you should verify the currency of the information above using the ASSIST Online database at http://www.dodssp.daps.mil.