NOTE: The document identifier and heading has been changed on this page to reflect that this is a performance specification. There are no other changes to this document. The document identifier on subsequent pages has not been changed, but will be changed the next time this document is revised.

MIL-PRF-55339/20
6 May 1975
SUPERSEDING
MIL-A-27434/37
9 June 1961

PERFORMANCE SPECIFICATION

ADAPTER, CONNECTOR, COAXIAL, RADIO FREQUENCY, (BETWEEN SERIES BNC TO SERIES N), CLASS 2, STRAIGHT PLUG

This specification is approved for use by all Departments and Agencies of the Department of Defense.

The complete requirements for procuring the adapters described herein shall consist of this specification and the latest issue of Specification MIL-PRF-55339.

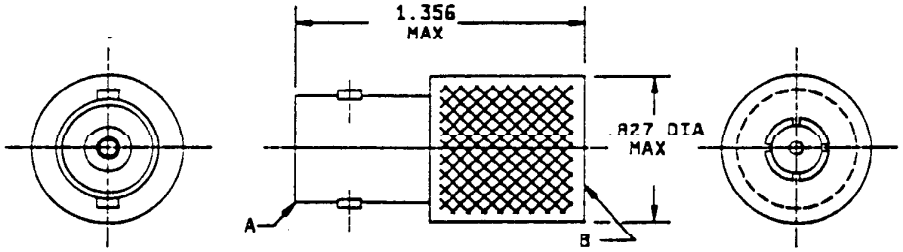

Inches	mm
.827	21.01
1.356	34.44

Reference	Series	Contact	Figure
A	BNC	Socket	2
B	N	Pin	3

NOTES:
1. Dimensions are in inches.
2. Metric equivalents (to the nearest .01 mm) are given for general information only and are based upon 1 inch = 25.4 mm.
3. All undimensioned pictorial representations are for reference purposes only.

FIGURE 1. General configuration.

FSC 5935

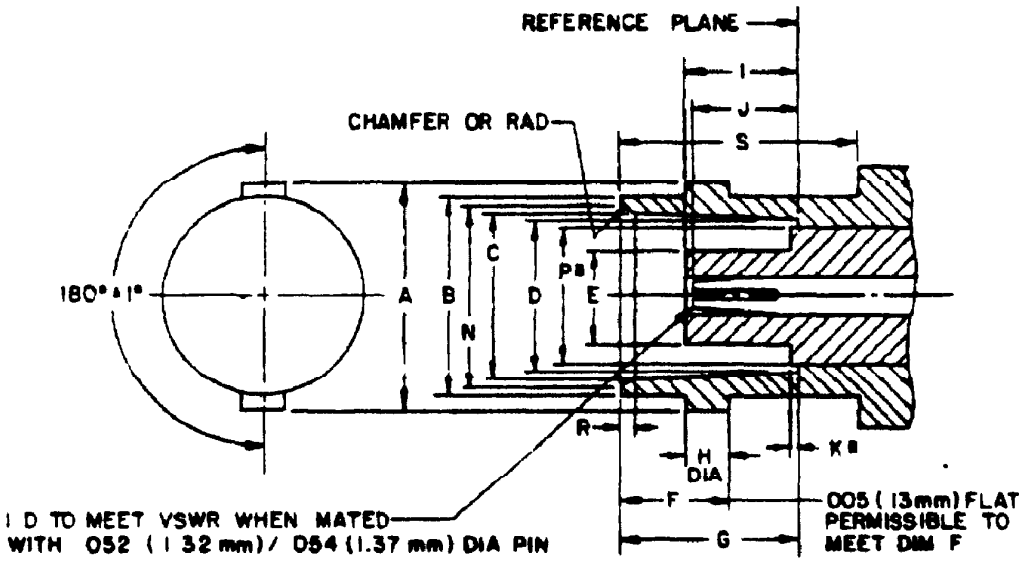

Ltr	Dimensions in inches with metric equivalents (mm) in parentheses	
	Minimum	Maximum
A	.432(10.97)	.436(11.07)
B	.375 (9.60)	.382 (9.70)
C	.327 (8.31)	.333 (8.46)
D	.319 (8.10)	.321 (8.15)
E	- - - -	.186 (4.72)
F	.204 (5.18)	.208 (5.28)
G	.327 (8.31)	.335 (8.51)
H	.075 (1.91)	.081 (2.06)
I	- - - -	.208 (5.28)
J		.206 (5.23)
K*	- - - -	.006 (.15)
L	.195 (4.95)	- - - -
M	.081 (2.06)	.087 (2.21)
N	.346 (8.79)	.356 (9.04)
P*	- - - -	.256 (6.50)
R	.015 (.38)	.030 (.76)
S	.414(10.52)	- - - -

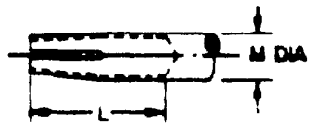

P dimension applies to that portion (if applicable) of dielectric which extends beyond reference plane by dimension K

NOTES

1. Dimensions are in inches.
2. Metric equivalents (to the nearest .01 mm) are given for general information only and are based upon 1 inch = 25.4 mm.
3. Concave depression .100 (2.54 mm) x .005 (.13 mm) deep between studs permissible.
4. All undimensioned pictorial representations are for reference purposes only.

FIGURE 2. Mating dimensions for BNC socket contact terminations.

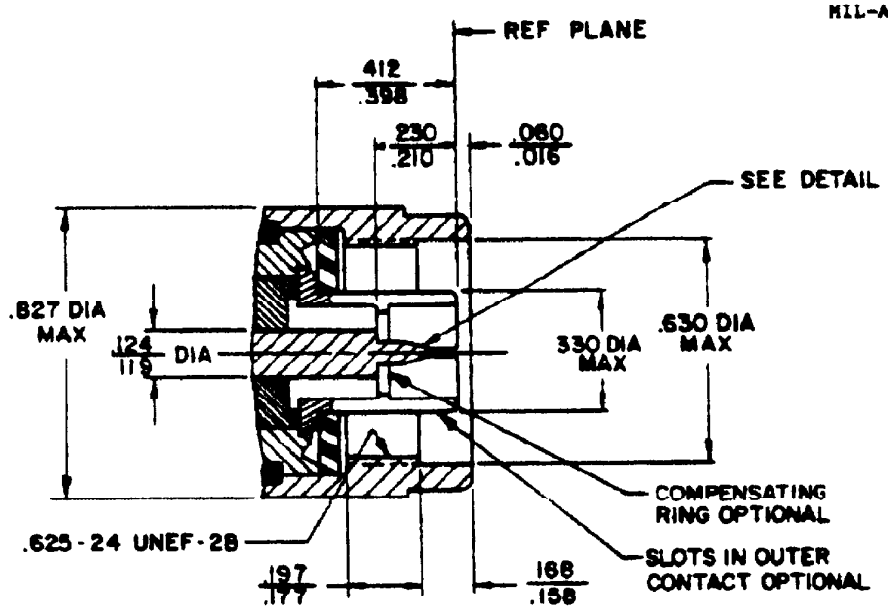

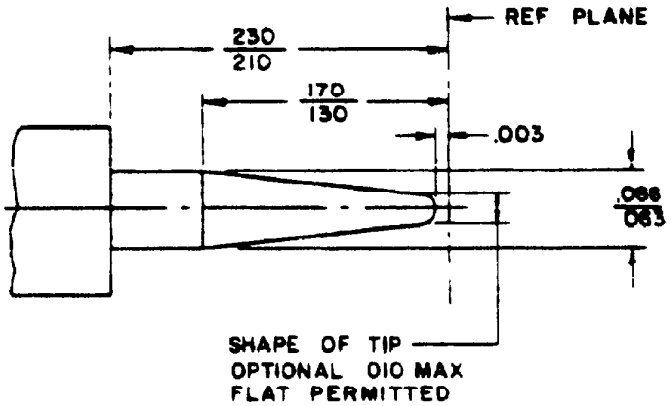

DETAIL

INCHES	MM
.003	.08
.010	.25
.016	.41
.060	1.52
.063	1.60
.066	1.68
.119	3.02
.124	3.15
.130	3.30
.158	4.01
.168	4.27
.170	4.32
.177	4.50
.197	5.00
.210	5.33
.230	5.84
.330	8.38
.398	10.11
.412	10.46
.625	15.88
.630	16.00
.827	21.01

NOTES

1. Dimensions are in inches.
2. Three holes .027 (.69 mm) minimum diameter, equally spaced, are required for safety wiring after mating. Location on coupling nut optional.
3. Metric equivalents (to the nearest .01 mm) are given for general information only and are based upon 1 inch = 25.4 mm.
4. All undimensioned pictorial representations are for reference purposes only
5. Outer contact shall have a minimum of four slots.

FIGURE 3. Mating dimensions for N pin contact terminations.

DESIGN AND CONSTRUCTION:

General configuration See figure 1.

Impedance 50 ohms, nom

Working voltage: Sea level - 500 Vrms.
70,000 feet - 125 Vrms.

Frequency range: 0 to 4 GHz.

Temperature range: -65° to +165°C.

PERFORMANCE (installation torque of 6 to 10 in. lb, series N)

Dimensions. See figures 1, 2, and 3.

Center contact retention:	Series BNC	Series N
Axial force (lb, min) - - - - - - -	6	6
Torque (in. oz, min) - - - - - - -	N/A	N/A

Force to engage and disengage:	Series BNC	Series N
Longitudinal force (lb, max) - - -	3.0	0
Torque (in. lb, max) - - - - - - -	2.5	6.0

Coupling proof torque: 15 in. lb, min, series N

Mating characteristics, series BNC.
- Center contact (socket).
  - Oversize test pin dia - .057 in., min
    - Insertion depth - .125 in., min
    - No. of insertions - 1.
  - Max test pin (insertion force test), series BNC:
    - Steel test pin dia - .054 in , min.
    - Pin finish - 16 microinches.
    - Insertion force - 2 lb, max.
    - No. of insertions - 1.
  - Min test pin (withdrawal force), series BNC.
    - Steel test pin dia - .052 in, max
    - Pin finish - 16 microinches
    - Withdrawal force - 2 oz, min.
    - No. of withdrawals - 1.
- Outer contact, series N.
  - Min test pin ID - .316 in, max.
    - Pin finish - 16 microinches.
    - Insertion force - 25 lb, max.
    - Insertion depth - 093 in., min.
    - No. of insertions - 1.
  - Slotted member contacts only, series N:
  - Max test ring ID - .324 in., min.
    - Test ring finish - 16 microinches
    - Insertion depth - .031 in., max.
    - No. of insertions - 1.

Permeability. <2.0.

Seal Hermetic - Not applicable
Pressurized - Not applicable.
Weatherproof - Not applicable.

Insulation resistance 5,000 megohms, min

VSWR 1.35:1, max at .5 to 4 GHz

RF leakage (total): -55 dB, min, 2 to 3 GHz.

RF insertion loss: .35 dB, max, 3 GHz
(020 $\sqrt{F}$ (GHz) dB max tested at 3 GHz)

Durability. 500, min.
Rate: 12 c/m, min.

Dielectric withstanding. Test voltage - 1,500 Vrms, min (sea level).

Contact resistance (milliohms, max):

Contact	Initial	After
Center	2.0	2.5
Outer	.25	N/A

Vibration, high frequency: Interruptions - 1 µs, max.

Shock. Test condition I.

Thermal shock. Test condition C.

Moisture resistance: 200 megohms, min.

Corona level. Voltage - 375 V, min.
Altitude - 70,000 feet, min

RF high potential withstanding voltage. RF voltage - 1,000 Vrms, min.
Frequency - 5 MHz, min.

Salt spray (corrosion) Applicable.

Coupling mechanism retention force 100 lb, min, series N

MARKING: As specified in MIL-A-55339.
Part No. M55339/20-00201.

TABLE I. Cross reference of part numbers.

Part number	Superseded part number or type designation 1/
M55339/20-00201	UG-201A/U REB49324

1/ The superseded part number or the type designation is for cross reference only. Where a superseded part number or type designation is not given, none was assigned or will be assigned. The part number M55339/20-00201 shall be used in all cases for marking and identifying the adapter.

Custodians:
Army - EL
Navy - EC
Air Force - 85

Review activities:
Army - MU, MI, EL
Navy - SH
Air Force - 11, 80
DSA - ES

User activities
Army - AT
Navy - AS, MC
Air Force - 19

Preparing activity.
Army - EL

Agent
DSA - ES

(Project 5935-1918-18)

INSTRUCTIONS: In a continuing effort to make our standardization documents better, the DoD provides this form for use in submitting comments and suggestions for improvements. All users of military standardization documents are invited to provide suggestions. This form may be detached, folded along the lines indicated, taped along the loose edge *(DO NOT STAPLE)*, and mailed. In block 5, be as specific as possible about particular problem areas such as wording which required interpretation, was too rigid, restrictive, loose, ambiguous, or was incompatible, and give proposed wording changes which would alleviate the problems. Enter in block 6 any remarks not related to a specific paragraph of the document. If block 7 is filled out, an acknowledgement will be mailed to you within 30 days to let you know that your comments were received and are being considered.

NOTE This form may not be used to request copies of documents, nor to request waivers, deviations, or clarification of specification requirements on current contracts. Comments submitted on this form do not constitute or imply authorization to waive any portion of the referenced document(s) or to amend contractual requirements.

(Fold along this line)

(Fold along this line)

DEPARTMENT OF THE ARMY

NO POSTAGE NECESSARY IF MAILED IN THE UNITED STATES

OFFICIAL BUSINESS
PENALTY FOR PRIVATE USE $300

BUSINESS REPLY MAIL
FIRST CLASS PERMIT NO 12062 WASHINGTON D C
POSTAGE WILL BE PAID BY THE DEPARTMENT OF THE ARMY

Commander
US Army Communications - Electronics Command
ATTN: DRSEL-ED-TO
Fort Monmouth, NJ 07703

(TO DETACH THIS FORM, CUT ALONG THIS LINE)

STANDARDIZATION DOCUMENT IMPROVEMENT PROPOSAL

(See Instructions – Reverse Side)

1. DOCUMENT NUMBER

2. DOCUMENT TITLE

3a. NAME OF SUBMITTING ORGANIZATION

4. TYPE OF ORGANIZATION *(Mark one)*

- ☐ VENDOR
- ☐ USER
- ☐ MANUFACTURER
- ☐ OTHER *(Specify)* _____

b. ADDRESS *(Street, City, State, ZIP Code)*

5. PROBLEM AREAS

a. Paragraph Number and Wording

b. Recommended Wording

c. Reason/Rationale for Recommendation

6. REMARKS

7a. NAME OF SUBMITTER *(Last, First, MI)* – Optional

b. WORK TELEPHONE NUMBER *(Include Area Code)* – Optional

c. MAILING ADDRESS *(Street, City, State, ZIP Code)* – Optional

8. DATE OF SUBMISSION *(YYMMDD)*

DD FORM 82 MAR 1426

PREVIOUS EDITION IS OBSOLETE