INCH-POUND

MIL-PRF-55514/11C
21 February 2002
SUPERSEDING
MIL-PRF-55514/11B
9 October 1997

PERFORMANCE SPECIFICATION SHEET

CAPACITORS, FIXED, METALLIZED PLASTIC DIELECTRIC, DC, IN NONMETAL CASES, ESTABLISHED RELIABILITY, STYLES CFR26 AND CFR27

The specification is approved for use by all Departments and Agencies of the Department of Defense.

The requirements for acquiring the product described herein shall consist of this specification and MIL-PRF-55514.

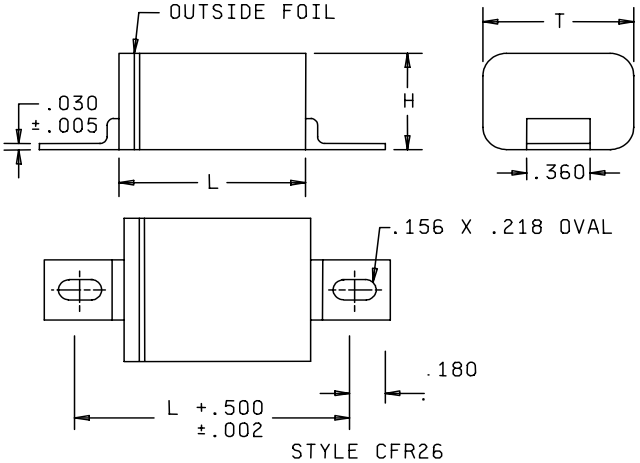

STYLE CFR26

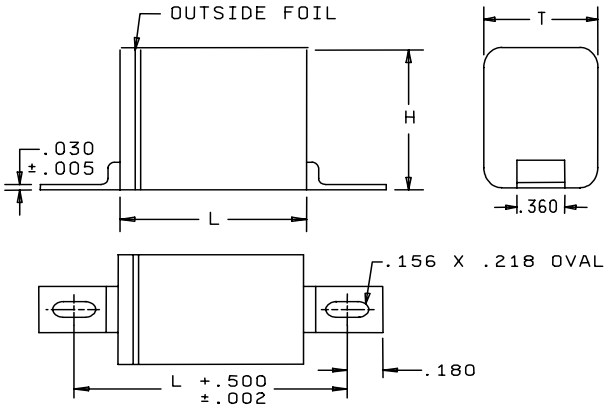

STYLE CFR27

Inches	mm
.002	0.05
.005	0.13
.030	0.76
.156	3.96
.180	4.57
.218	5.54
.360	9.14
.500	12.70

NOTES:
1. Dimensions are in inches.
2. Metric equivalents are given for general information.
3. Unless otherwise specified, tolerance is ±.010 (0.25 mm).
4. These capacitors are to be mounted by screws.

FIGURE 1. Styles CFR26 and CFR27 capacitors.

DISTRIBUTION STATEMENT A. Approved for public release; distribution is unlimited.

REQUIREMENTS:

Design and construction:

Dimensions and configuration: See figure 1.

Case: Non-hermetic.

* Dielectric: Metallized polycarbonate (characteristic R); or
Polyphenylene sulfide (characteristic U).

* Characteristic: R or U.

Capacitance value: See table I.

Capacitance tolerance: See table I.

Solderability: Not applicable.

Operating temperature range: -55°C to +85°C, when properly voltage derated (see figure 2), characteristic R or U capacitors will operate to +125°C.

Voltage rating: See table I.

Preconditioning: Not applicable.

Burn-in: In accordance with MIL-PRF-55514 except for the following conditions:

a. DC burn-in voltage shall be 140 percent of the dc rated voltage applied for 48 hours minimum at 125°C, +4°C, -0°C.

b. AC burn-in: Not applicable.

Insulation resistance: Insulation resistance shall be measured at rated voltage at the applicable temperature. Charge time 2 minutes maximum; however, for capacitance values greater than 1.0 µF, an additional 1 minute per µF is permitted. The following limits shall apply:

Temperature	Insulation resistance
25°C	50,000
85°C	5,000
125°C	500

Marking: In accordance with MIL-PRF-55514.

Qualification submittal:

	Type designation	Sample size
*	CFR27LUA106JM	61
*	CFR27LUA506JM	61
*	CFR27LUG506JM	61
*	CFR27LUB506JM	61

* TABLE I. Capacitor characteristics and dimensions.

Type designation 1/	Capacitance	Capacitance tolerance	Rated voltage at 85°C	ESR milliohms at 100 KHz	Ripple current max at 25°C	Resonant frequency kHz	Style CFR26			Style CFR27		
							T 2/ 4/	H 2/ 4/	L 3/ 4/	T 2/ 4/	H 2/ 4/	L 3/ 4/
CFR2-L-A106--	10.0 µF	J, K, M	50 V	11	12.6	265	.812	.562	.750	.562	.812	.750
CFR2-L-A206--	20.0 µF	J, K, M	50 V	10	14.8	178	.968	.718	.875	.718	.968	.875
CFR2-L-A506--	50.0 µF	J, K, M	50 V	6	23.5	108	1.375	1.000	1.000	1.000	1.375	1.000
CFR2-L-G505--	5.0 µF	J, K, M	75 V	13	11.6	356	---	---	---	.500	.750	.875
CFR2-L-G106--	10.0 µF	J, K, M	75 V	12	13.5	251	1.031	.718	.875	.718	1.031	.875
CFR2-L-G206--	20.0 µF	J, K, M	75 V	11	16.5	171	1.312	.937	1.000	.937	1.312	1.000
CFR2-L-G506--	50.0 µF	J, K, M	75 V	6	24.2	100	1.687	1.312	1.250	1.312	1.687	1.250
CFR2-L-B505--	5.0 µF	J, K, M	100 V	13	12.4	356	.906	.593	.875	.593	.906	.875
CFR2-L-B106--	10.0 µF	J, K, M	100 V	12	14.6	242	1.093	.781	1.000	.781	1.093	1.000
CFR2-L-B206--	20.0 µF	J, K, M	100 V	11	17.1	160	1.281	.906	1.250	.906	1.281	1.250
CFR2-L-B506--	50.0 µF	J, K, M	100 V	6	23.6	96	1.812	1.437	1.375	1.437	1.812	1.375

* 1/ The complete type designation will include additional symbols to indicate style (6 for CFR26 or 7 for CFR27), characteristic (U or R), capacitance tolerance, and product level (C, M, P, R and S).

2/ Tolerances: Thickness and length +.062 inch, -.156 inch (+1.57 mm, -3.96 mm) on .500 inch (12.70 mm) and +.093, -.187 (+2.36 mm, -4.75 mm) on .562 inch (14.27 mm) and greater.

3/ Tolerances: Length +.093 inch, -.062 inch (+2.36 mm, -1.57 mm).

* 4/ See dimension table below:

Inches	mm	Inches	mm	Inches	mm
.500	12.70	.875	22.23	1.250	31.75
.562	14.27	.906	23.01	1.281	32.54
.593	15.06	.937	23.80	1.312	33.32
.718	18.24	.968	24.59	1.375	34.93
.750	19.05	1.000	25.40	1.437	36.50
.781	19.84	1.031	26.19	1.687	42.85
.812	20.62	1.093	27.76	1.812	46.02

Substitutability for capacitance tolerance shall be as follows:

Capacitance tolerance	Will replace capacitance tolerance
J	K, M
K	M
M	

Substitutability for voltage shall be as follows:

Volts dc	Will replace voltages
100	75, 50
75	50

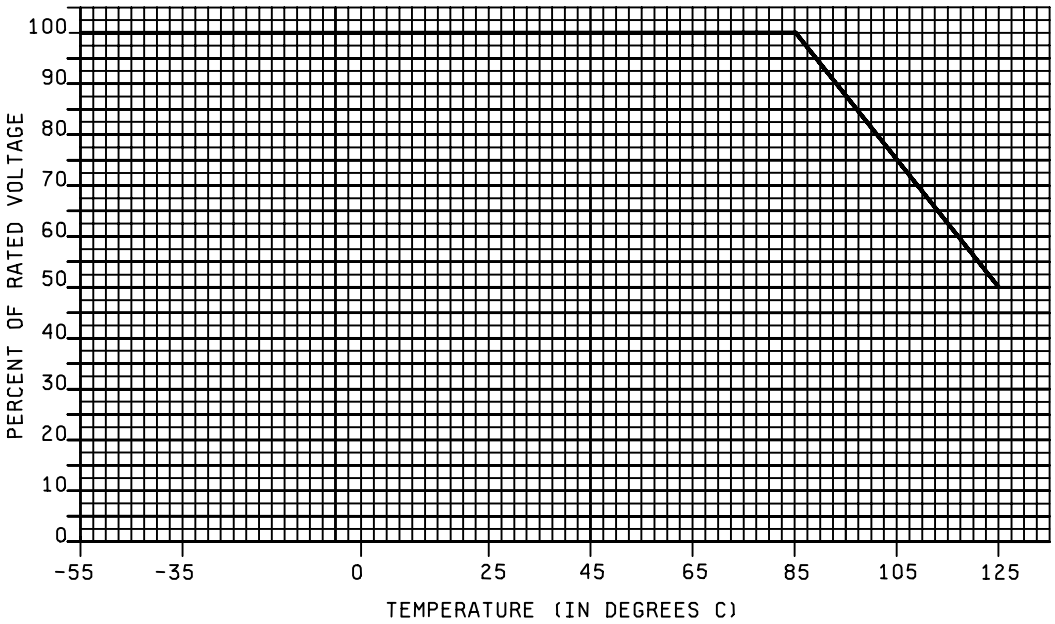

FIGURE 2. Voltage derating with temperature.

Custodians:
Army - CR
Navy - EC
Air Force - 11
DLA - CC

Review activities:
Navy - AS, MC, OS
Air Force - 19

Preparing activity:
Army - CR

Agent:
DLA - CC

(Project 5910-2165-02)