INCH-POUND

MIL-PRF-55514/9A
9 October 1997
SUPERSEDING
MIL-C-55514/9
14 January 1983

PERFORMANCE SPECIFICATION SHEET

CAPACITORS, FIXED, METALLIZED PLASTIC DIELECTRIC, DC, IN NONMETAL CASES, ESTABLISHED RELIABILITY, STYLE CFR13 AND CFR14

This specification is approved for use by all Departments and Agencies of the Department of Defense.

The requirements for acquiring the product described herein shall consist of this specification and MIL-PRF-55514.

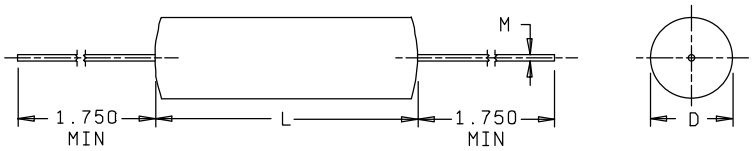

FIGURE 1. Style CFR13 capacitors.

Inches	mm
.002	.05
.005	0.13
.032	0.81
.156	3.96
.312	7.93
.360	9.14
1.750	44.45

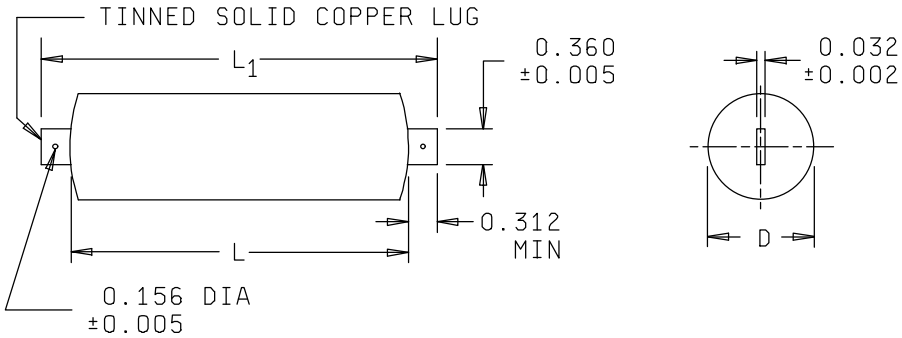

FIGURE 2. Style CFR14 capacitors.

NOTES:
1. Dimensions are in inches.
2. Metric equivalents are given for general information only and are based upon 1 inch = 25.4 mm.

DISTRIBUTION STATEMENT A. Approved for public release; distribution is unlimited.

TABLE I. Capacitor characteristics.

Characteristic L, style CFR13 capacitors														
Type designation 1/	Capacitance nominal	DC rated voltage (at 105°C)	Capacitance tolerance available	D	L ±.062(1.57)	M 2/	ESR Ohms 20 - 100 kHz Max	Maximum ripple current (AMPS RMS) 20-100 kHz case temperature						
								+25°C	+35°C	+45°C	+55°C	+65°C	+75°C	+85°C
CFR13ALB105--	1.0	100	J, K, M	.469 (11.91) ±.062 (1.57)	.750 (19.05)	.032 (.81)	.015	9.2	8.5	7.8	7.0	6.0	4.9	4.5
CFR13ALB205--	2.0	100	J, K, M	.534 (13.56) ±.062 (1.57)	.938 (23.81)	.032 (.81)	.012	10.8	10.0	9.1	8.2	7.0	5.8	5.3
CFR13ALB305--	3.0	100	J, K, M	.624 (15.85) ±.093 (2.36)	.938 (23.81)	.040 (1.02)	.011	12.1	11.2	10.3	9.2	8.0	6.5	5.9
CFR13ALB505--	5.0	100	J, K, M	.640 (16.26) ±.093 (2.36)	1.250 (31.75)	.040 (1.02)	.010	13.8	12.7	11.6	10.4	9.0	7.4	6.7
CFR13ALB106--	10.0	100	J, K, M	.805 (20.45) ±.093 (2.36)	1.500 (38.10)	.040 (1.02)	.009	15.0	15.0	14.2	12.7	11.0	9.0	8.2
CFR13ALB206--	20.0	100	J, K, M	.875 (22.23) ±.125 (3.18)	2.250 (57.15)	.040 (1.02)	.008	15.0	15.0	15.0	15.0	13.6	11.1	10.0
CFR13ALB306--	30.0	100	J, K, M	1.075 (27.31) ±.125 (3.18)	2.250 (57.15)	.040 (1.02)	.006	15.0	15.0	15.0	15.0	15.0	12.4	11.4
CFR13ALC105--	1.0	200	J, K, M	.450 (11.43) ±.062 (1.57)	1.250 (31.75)	.032 (.81)	.020	7.3	7.3	7.3	7.3	7.2	5.9	5.4
CFR13ALC205--	2.0	200	J, K, M	.605 (15.37) ±.093 (2.36)	1.250 (31.75)	.032 (.81)	.015	12.0	12.0	11.3	10.1	8.7	7.1	6.5
CFR13ALC305--	3.0	200	J, K, M	.654 (16.61) ±.093 (2.36)	1.500 (38.10)	.040 (1.02)	.013	15.0	13.8	12.6	11.3	9.8	8.0	7.3
CFR13ALC505--	5.0	200	J, K, M	.769 (19.53) ±.093 (2.36)	1.750 (44.45)	.040 (1.02)	.011	15.0	15.0	14.7	13.1	11.4	9.3	8.5
CFR13ALC106--	10.0	200	J, K, M	.905 (22.99) ±.125 (3.18)	2.250 (57.15)	.040 (1.02)	.009	15.0	15.0	15.0	15.0	13.8	11.3	10.3
CFR13ALC206--	20.0	200	J, K, M	1.315 (33.40) ±.125 (3.18)	2.250 (57.15)	.040 (1.02)	.006	15.0	15.0	15.0	15.0	15.0	14.1	12.8
CFR13ALE105--	1.0	400	J, K, M	.620 (15.75) ±.093 (2.36)	1.500 (38.10)	.040 (1.02)	.019	9.5	9.5	9.5	9.5	9.5	7.8	7.1
CFR13ALE205--	2.0	400	J, K, M	.802 (20.37) ±.093 (2.36)	1.750 (44.45)	.040 (1.02)	.015	15.0	15.0	15.0	13.4	11.6	9.5	8.7
CFR13ALE305--	3.0	400	J, K, M	.961 (24.41) ±.125 (3.18)	1.750 (44.45)	.040 (1.02)	.012	15.0	15.0	15.0	15.0	13.1	10.7	9.8
CFR13ALE505--	5.0	400	J, K, M	1.067 (27.10) ±.125 (3.18)	2.250 (57.15)	.040 (1.02)	.010	15.0	15.0	15.0	15.0	15.0	12.5	11.4
CFR13ALE106--	10.0	400	J, K, M	1.543 (39.19) ±.125 (3.18)	2.250 (57.15)	.040 (1.02)	.006	15.0	15.0	15.0	15.0	15.0	15.0	14.1

See footnotes at end of table.

TABLE I. Capacitor characteristics - Continued.

Characteristic L, style CFR13 capacitors														
Type designation 1/	Capacitance nominal	DC rated voltage (at 105°C)	Capacitance tolerance available	D	L ±.078 (1.98)	L_1 ±.062(1.57)	ESR Ohms 20-100 kHz Max	Maximum ripple current (AMPS RMS) 20-100 kHz case temperature						
								+25°C	+35°C	+45°C	+55°C	+65°C	+75°C	+85°C
CFR14LLB105--	1.0	100	J, K, M	.469 (11.91) ±.062 (1.57)	.922(23.42)	1.640(41.66)	.015	10.3	9.5	8.7	7.8	6.7	5.5	5.0
CFR14LLB205--	2.0	100	J, K, M	.534 (13.56) ±.062 (1.57)	1.110(28.19)	1.828(46.43)	.012	12.0	11.0	10.0	8.9	7.8	6.3	5.8
CFR14LLB305--	3.0	100	J, K, M	.624 (15.85) ±.093 (2.36)	1.110(28.19)	1.828(46.43)	.011	13.3	12.3	11.2	10.0	8.7	7.1	6.5
CFR14LLB505--	5.0	100	J, K, M	.640 (16.26) ±.093 (2.36)	1.422(36.12)	2.140(54.36)	.010	14.8	13.7	12.5	11.2	9.7	7.9	7.2
CFR14LLB106--	10.0	100	J, K, M	.805 (20.45) ±.093 (2.36)	1.672(42.47)	2.390(60.71)	.009	17.8	16.5	15.0	13.5	11.7	9.5	8.7
CFR14LLB206--	20.0	100	J, K, M	.875 (22.23) ±.125 (3.18)	2.422(61.52)	3.140(79.76)	.008	21.6	20.0	18.3	16.4	14.2	11.6	10.6
CFR14LLB306--	30.0	100	J, K, M	1.075 (27.31) ±.125 (3.18)	2.422(61.52)	3.140(79.76)	.006	24.3	22.5	20.5	18.4	15.9	13.0	11.9
CFR14LLC105--	1.0	200	J, K, M	.450 (11.43) ±.062 (1.57)	1.422(36.12)	2.140(54.36)	.020	7.3	7.3	7.3	7.3	7.2	6.4	5.8
CFR14LLC205--	2.0	200	J, K, M	.605 (15.37) ±.093 (2.36)	1.422(36.12)	2.140(54.36)	.015	14.3	13.3	12.1	10.8	8.7	7.7	7.0
CFR14LLC305--	3.0	200	J, K, M	.654 (16.61) ±.093 (2.36)	1.672(42.47)	2.390(60.71)	.013	15.9	14.7	13.5	12.0	9.8	8.5	7.8
CFR14LLC505--	5.0	200	J, K, M	.769 (19.53) ±.093 (2.36)	1.922(48.82)	2.640(67.06)	.011	18.3	17.0	15.5	13.9	11.4	9.8	8.9
CFR14LLC106--	10.0	200	J, K, M	.905 (22.99) ±.125 (3.18)	2.422(61.52)	3.140(79.76)	.009	22.4	20.7	18.9	16.9	13.8	12.0	10.9
CFR14LLC206--	20.0	200	J, K, M	1.315 (33.40) ±.125 (3.18)	2.422(61.52)	3.140(79.76)	.006	27.4	25.4	23.2	20.7	15.0	14.7	13.4
CFR14LLE105--	1.0	400	J, K, M	.620 (15.75) ±.093 (2.36)	1.672(42.47)	2.390(60.71)	.019	9.5	9.5	9.5	9.5	9.5	8.3	7.5
CFR14LLE205--	2.0	400	J, K, M	.802 (20.37) ±.093 (2.36)	1.922(48.82)	2.640(67.06)	.015	15.0	15.0	15.0	14.2	11.6	10.0	9.1
CFR14LLE305--	3.0	400	J, K, M	.961 (24.41) ±.125 (3.18)	1.922(48.82)	2.640(67.06)	.012	21.1	19.5	17.8	15.9	13.1	11.3	10.3
CFR14LLE505--	5.0	400	J, K, M	1.067 (27.10) ±.125 (3.18)	2.422(61.52)	3.140(79.76)	.010	24.4	22.6	20.6	18.5	15.0	13.1	11.9
CFR14LLE106--	10.0	400	J, K, M	1.543 (39.19) ±.125 (3.18)	2.422(61.52)	3.140(79.76)	.006	30.0	27.8	25.4	22.7	15.0	16.1	14.7

1/ The complete type designation will include additional symbols to indicate capacitance tolerance and product level (C, M, P, R, and S).
2/ Comparable AWG sizes are No. 20 AWG (.032) and No. 18 AWG (.040).

REQUIREMENTS:

Dimensions and configuration: See figure I and figure II and table I.

Case: Non-hermetic.

Dielectric: Polypropylene, metallized.

Capacitance (Cap.) value: See table I.

Capacitance tolerance: See table I.

Rated voltage: See table I.

Operating temperature range: -55°C to +105°C for dc operation.

Product level: Non-established reliability - C; Established reliability - M, P, R or S.

Preconditioning: Not applicable.

Burn-in: In accordance with MIL-PRF-55514 except ac capacitors shall be +105°C +0°C, -5°C, and the applied voltage shall be 140 percent of the dc voltage specified in table I.

Dielectric withstanding voltage (DWV): In accordance with MIL-PRF-55514 except charge time 2 minutes maximum at 200 percent rated dc voltage.

Insulation resistance: In accordance with MIL-PRF-55514 except test voltage to be 100 V dc.

Dissipation factor (DF): Not more than 0.1 percent when measured in accordance with MIL-PRF-55514.

Low temperature conditioning and capacitance change with temperature: In accordance with MIL-PRF-55514.

Resistance to soldering heat: Method 210 of MIL-STD-202, condition B.

ΔCap: Maximum of +0.25 percent.

Life (at 105°C): In accordance with MIL-PRF-55514.

Accelerated condition: 140 percent of 105°C rated voltage.

Rated condition: 100 percent of +105°C rated voltage.

IR (terminal to terminal):

(at +25°C): Not less than 50.0 percent of initial requirement.

ΔCap (at 25°C): Maximum of 1.0 percent.

DF: (at +25°C) after life: .12 percent maximum.

AC conditioning: In accordance with MIL-PRF-55514. AC conditioning for qualification shall be at the rated ac ripple current at 85°C and 40 kHz. For group B testing, rated ac ripple current at 85°C and 40 kHz shall be run on test samples in accordance with table II herein at 12-month intervals.

TABLE II. AC conditioning test samples.

DC rated voltage (volts)	Sample size	Cap range for selection of sample (µF) 1/
100	24	1.0 to 30.0
200	24	1.0 to 20.0
400	24	1.0 to 10.0

1/ Each test sample shall contain at least one capacitor of the highest and lowest capacitance value of each voltage group manufactured during the 12-month period.

Custodian:
Army - CR
Navy - EC
Air Force - 85

Review activities:
Air Force - 17, 19, 99
Navy - AS, MC, OS

Preparing activity:
Army - CR

Agent:
DLA - CC

(Project 5910-1946-04)