INCH POUND

MIL-PRF-83287/1C
30 AUGUST 1999
SUPERSEDING
MIL-I-83287/1B
22 July 1988

PERFORMANCE SPECIFICATION SHEET

INDICATORS, FAULT LOCATING, FLAG INDICATING, MECHANICAL RESET

This specification is approved for use by all Departments and Agencies of the Department of Defense.

The requirements for acquiring the indicators described herein shall consist of this specification sheet and the latest issue of MIL-PRF-83287.

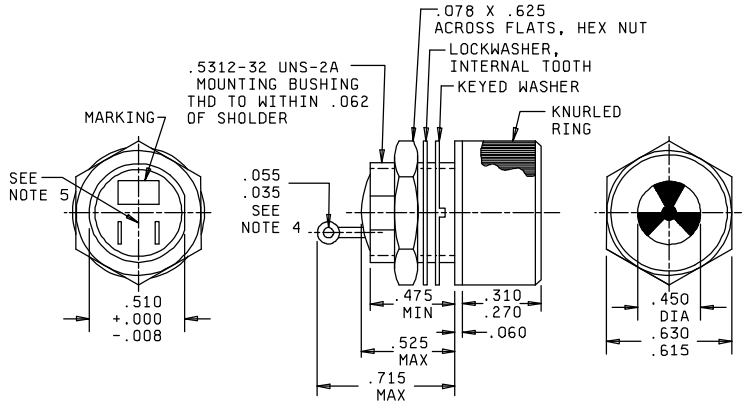

SOLDER TERMINALS

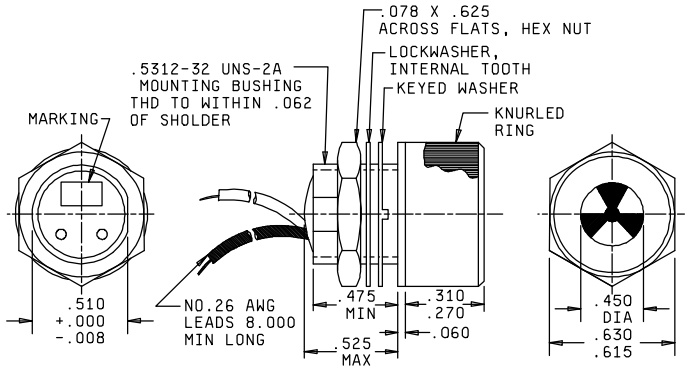

WIRE LEADS

FIGURE 1. Dimensions and configurations.

DISTRIBUTION STATEMENT A. Approved for public release; distribution is unlimited.

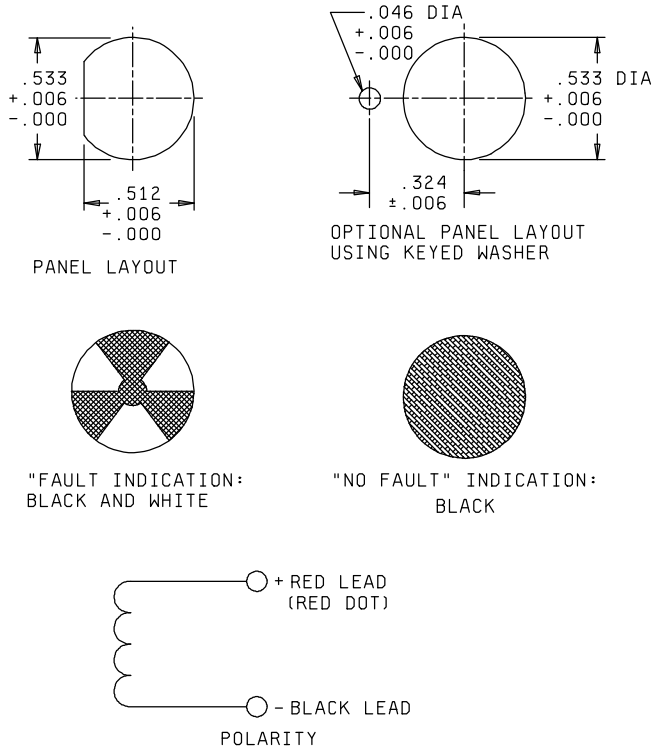

Inches	mm
.006	0.15
.008	0.20
.035	0.89
.046	1.17
.055	1.40
.060	1.52
.062	1.57
.078	1.98
.250	6.35
.310	7.87
.324	8.23
.450	11.43
.475	12.07
.510	12.95
.512	13.00
.515	13.08
.5312	13.492
.533	13.54
.615	15.62
.625	15.88
.630	16.00
.715	18.16
8.000	203.20

NOTES:

1. Dimensions are in inches.
2. Metric equivalents are given for general information only.
3. Unless otherwise specified, tolerance is ± .005 (0.13 mm).
4. The flag and the flat on the mounting bushing shall be aligned approximately as shown.
5. The shape and location of the solder terminal shown is not intended to limit specific manufacturing processes. When the shape of terminal in the schematic is used, the hole diameter shall be as shown.
6. The positive terminal shall be identified by a red dot.
7. Mounting torque of 5 to 7 in-lbs. May be used.

FIGURE 1. Dimensions and configurations – Continued.

REQUIREMENTS:

Dimensions and characteristics: See figure 1 and table 1.

Weight (including hardware): 0.031 pound (14 grams), maximum.

Transfer pulse length: A pulse length of 40 milliseconds or greater shall cause a fault indication. A pulse length of 2 milliseconds or less shall not cause a fault indication.

Terminal strength:

Rigid type solder terminals:	Test condition A (3 pounds, minimum).
Wire type solder terminals:	Test condition A (3 pounds, minimum). Test condition C (1 pound, minimum).

Marking of solder terminals: The positive terminal shall be identified by a red dot.

Extent of qualification: Qualification testing and approval of M83287/01-01, M83287/01-29 and M83287/01-36 shall be sufficient to grant qualification approval for all indicators covered by this specification sheet. Qualification testing and approval of M83287/01-01 and M83287/01-28 shall be sufficient to grant qualification approval for dash numbers 01 through 28.

Part Number: M83287/01- (dash number from table I).

Random vibration (dash numbers 29 through 36 only): Test condition D, curve 1, 30 minutes test time.

TABLE I. Indicator characteristics.

Superseding military part numbers M83287/01-	Superseded military part numbers		Voltage (volts, dc)			DC coil resistance at						Anti-reflection coating	Termination type
				Operating		-55°C		+125°C		Ambient			
			Rated	Min 1/	Max	Min	Max	Min	Max	Min	Max		
01	M83287-01	M81663/2-01	3	2.4	3.6	4.8	12	12	27	8.5	18	No coating	Wire leads
02	---												Solder terminals
03	M83287-02											With coating	Wire leads
04	---												Solder terminals
05	M83287-03		5	4.0	6.0	13	34	30	73	22	52.8	No coating	Wire leads
06	---												Solder terminals
07	M83287-04											With coating	Wire leads
08	---												Solder terminals
09	M83287-05	M81662/2-02	6	4.8	7.2	19.8	50	45.7	107	33	77	No coating	Wire leads
10	---												Solder terminals
11	M83287-06											With coating	Wire leads
12	---												Solder terminals
13	M83287-07	M81663/2-03	12	9.6	14.4	78	198	180	420	130	303	No coating	Wire leads
14	---												Solder terminals
15	M83287-08											With coating	Wire leads
16	---												Solder terminals
17	M83287-09	M81663/2-04	24	19.2	28.8	318	572	734	1223	530	880	No coating	Wire leads
18	---												Solder terminals
19	M83287-10											With coating	Wire leads
20	---												Solder terminals
21	M83287-11	M81663/2-05	28	22.4	30.0	432	869	997	1850	720	1331	No coating	Wire leads
22	---												Solder terminals
23	M83287-12											With coating	Wire leads
24	---												Solder terminals
25 2/	M83287-15		28	16.0	30.0	216	796	499	1703	360	1225	No coating	Wire leads
26 2/	---												Solder terminals
27 2/	M83287-16											With coating	Wire leads
28 2/	---												Solder terminals
Indicators below have vibration characteristics													
29	M83287-03		5	4.0	6.0	13.2	34	30	73	22	52.8	No coating	Wire leads
30	---												Solder terminals
31	M83287-04											With coating	Wire leads
32	---												Solder terminals
33	M83287-09	M81663/2-04	24	19.2	28.8	318	572	734	1223	530	880	No coating	Wire leads
34	---												Solder terminals
35	M83287-10											With coating	Wire leads
36	---												Solder terminals

1/ Refers to the minimum operating voltage which the indicator must operate.
2/ For use with nonregulated power systems (see MIL-STD-704).

CONCLUDING MATERIAL

Custodians:
Navy - AS
Air Force - 11
DLA – CC

Review activities:
Air Force – 82

Preparing activity:
DLA - CC

(Project 6625-0895)