NOTE: The document identifier and heading has been changed on this page to reflect that this is a performance specification. There are no other changes to this document. The document identifier on subsequent pages has not been changed, but will be changed the next time this document is revised.

MIL-PRF-83446/10B
20 February 1985
SUPERSEDING
MIL-I-83446/10A
16 December 1980

PERFORMANCE SPECIFICATION SHEET

COILS, RADIO FREQUENCY, CHIP, FIXED

This specification is approved for use by all Departments and Agencies of the Department of Defense.

The complete requirements for acquiring the coils described herein shall consist of this specification and the latest issue of MIL-C-83446.

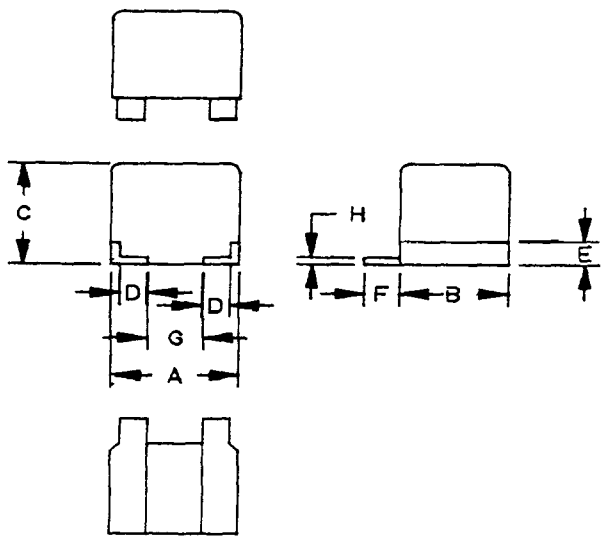

	INCHES	MM
A	.155 ±.008	3.94 ±0.20
B	.125 ±.008	3.18 ±0.20
C	.130 Max	3.30 Max
D	.037 ±.003	0.94 ±0.08
E	.020 ±.005	0.51 ±0.13
F	.040 $^{+.015}_{-.010}$	1.02 $^{+0.13}_{-0.25}$
G	.073 Min	1.85 Min
H	.005 ±.002	0.13 ±0.05

For dash numbers 01 thru 61

(WITH TABS)

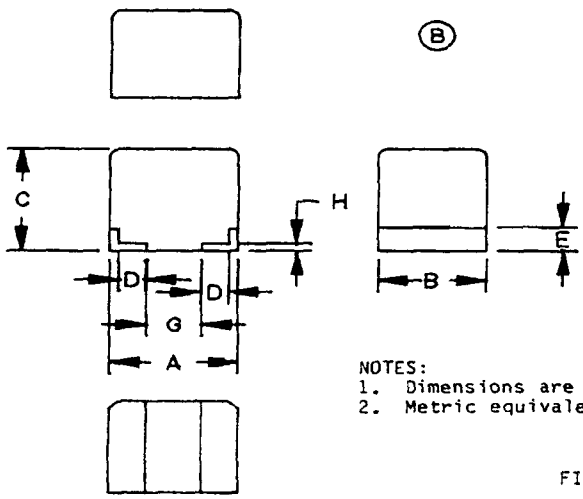

	INCHES	MM
A	.155 ±.088	3.94 ±0.20
B	.125 ±.008	3.18 ±0.20
C	.130 Max	3.30 Max
D	.037 ±.003	0.94 ±0.08
E	.020 ±.005	0.51 ±0.13
G	.073 Min	1.85 Min
H	.005 ±.002	0.13 ±0.05

For dash numbers 62 thru 122

(WITHOUT TABS)

NOTES:
1. Dimensions are in inches.
2. Metric equivalents are given for general information only.

FIGURE 1. Fixed, chip coil.

(B) denotes changes

FSC 5950

REQUIREMENTS

Dimensions and configurations: See figure 1.

Weight: 0.5 gram maximum.

Operating temperature range: -55°C to +125°C.

Temperature rise (at 90°C): 35°C.

Maximum operating temperature: 125°C

Altitude: 70,000 feet.

Dielectric withstanding voltage: Method 301 of MIL-STD-202, test voltage 500 volts rms.

Barometric pressure: Method 105, test condition C, MIL-STD-202, test voltage 200 volts rms.

Electrical characteristics (initial): See table I.

Electrical characteristics (final): See table II.

TABLE I. Electrical characteristics (initial) and dash numbers.

Dash number Ⓑ	Inductance ±10%	Q (min)	Q (typ)	Test frequency 1/	Self-resonant frequency (min)	DC resistance (max)	2/ Current (max)
	μH			MHz	MHz	Ohms	mA
01, 62	0.010	60	65	150	2000	0.04	1000
02, 63	0.012	70	82	"	1800	"	"
03, 64	0.015	75	87	"	1500	"	"
04, 65	0.018	75	87	"	1500	"	"
05, 66	0.022	60	65	100	1300	0.05	"
06, 67	0.027	"	70	"	1300	0.05	"
07, 68	0.033	"	70	"	1000	0.05	"
08, 69	0.039	"	70	"	1000	0.06	900
09, 70	0.047	65	75	"	800	0.06	900
10, 71	0.056	"	"	"	760	0.06	900
11, 72	0.068	"	"	"	700	0.07	840
12, 73	0.082	"	"	"	650	"	"
13, 74	0.100	"	77	50	570	"	"
14, 75	0.120	"	77	"	520	"	"
15, 76	0.150	75	87	"	400	0.08	790
16, 77	0.180	75	87	"	360	0.08	790
17, 78	0.220	70	80	"	320	0.08	790
18, 79	0.270	"	"	"	270	0.10	700
19, 80	0.330	"	"	"	240	0.10	700
20, 81	0.390	"	"	"	220	0.10	700
21, 82	0.470	"	"	25	190	0.14	590
22, 83	0.560	"	82	"	170	0.19	510
23, 84	0.680	"	83	"	160	0.26	430
24, 85	0.820	75	84	"	150	0.30	400
25, 86	1.00	75	87	"	130	0.34	380
26, 87	1.20	65	73	7.9	120	0.45	330
27, 88	1.50	"	"	"	110	0.57	290
28, 89	1.80	"	"	"	100	0.72	260
29, 90	2.20	"	"	"	80	0.9	230

See footnotes at end of table.

TABLE I. Electrical characteristics (initial) and dash numbers - Continued.

Dash number Ⓑ	Inductance ±10%	Q (min)	Q (typ)	Test frequency 1/	Self-resonant frequency (min)	DC resistance (max)	2/ Current (max)
	µH			MHz	MHz	Ohms	mA
30, 91	2.70	65	73	7.9	50	1.1	210
31, 92	3.30	60	70	"	50	1.2	200
32, 93	3.90	60	70	"	45	1.4	180
33, 94	4.70	60	70	"	42	1.6	170
34, 95	5.60	65	75	"	40	1.8	160
35, 96	6.80	"	"	"	37	2.4	140
36, 97	8.20	"	"	"	34	3.0	130
37, 98	10.0	"	"	"	29	3.5	120
38, 99	12.0	60	70	2.5	27	3.6	118
39, 100	15.0	"	70	"	22	3.7	115
40, 101	18.0	"	72	"	17	3.8	114
41, 102	22.0	"	72	"	16	3.9	113
42, 103	27.0	65	75	"	15	4.0	110
43, 104	33.0	65	75	"	14	5.0	100
44, 105	39.0	65	75	"	13	7.0	84
45, 106	47.0	70	78	"	12	8.0	79
46, 107	56.0	70	78	"	11	10.0	70
47, 108	68.0	65	75	"	10	11.0	67
48, 109	82.0	60	72	"	9	12.0	64
49, 110	100.0	60	70	"	8	13.0	62
50, 111	120.0	40	48	0.79	7	14.0	59
51, 112	150.0	"	"	"	6	16.0	56
52, 113	180.0	"	"	"	5	18.0	52
53, 114	220.0	"	"	"	4	24.0	45
54, 115	270.0	"	"	"	3.3	25.0	44
55, 116	330.0	40	48	0.79	3.1	29.0	41
56, 117	390.0	40	48	"	2.9	32.0	39
57, 118	470.0	35	45	"	2.4	35.0	37
58, 119	560.0	35	45	"	2.1	45.0	33
59, 120	680.0	35	40	"	1.9	55.0	30
60, 121	820.0	30	36	"	1.8	70.0	26
61, 122	1000.0	30	36		1.7	80.0	25

Ⓑ 1/ Test frequency range: 25 through 150 MHz:

For electrical characteristics measurements use TF-250RX-1 test fixture, or equal (see figure 2). Fixture inductance (approximately 0.009 µH) should be subtracted from calculated inductance.)

Test frequency range: 0.25 through 25 MHz.:

For electrical characteristics measurements use TF-260Q-1 test fixture, or equal (see figure 3). Fixture inductance (approximately 0.028 µH) and residual Q-meter inductance (approximately 0.01 µH) should be subtracted from indicated inductance.

2/ Maximum current allowed not to exceed the specified temperature rise.

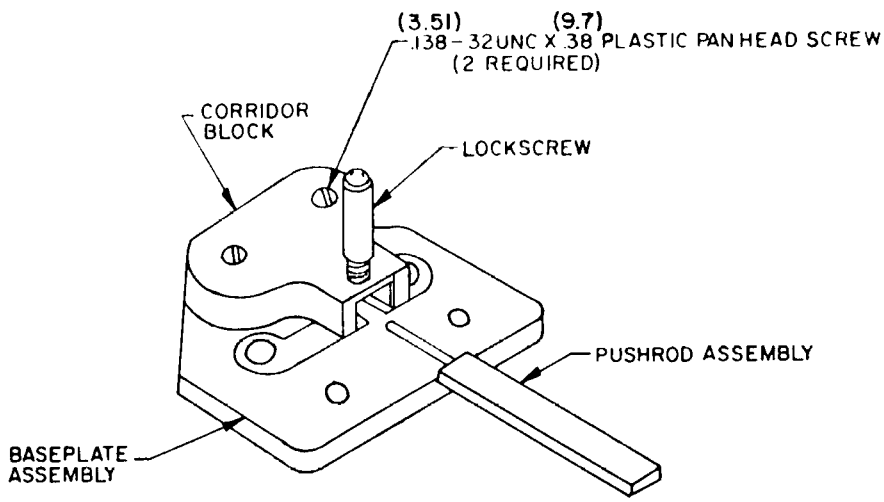

NOTES:
1. Dimensions are in inches.
2. Metric equivalents are given for general information only.
3. Metric equivalents are in parentheses.

FIGURE 2. Typical chip coil test fixture (TF-250RX-1, or equal).

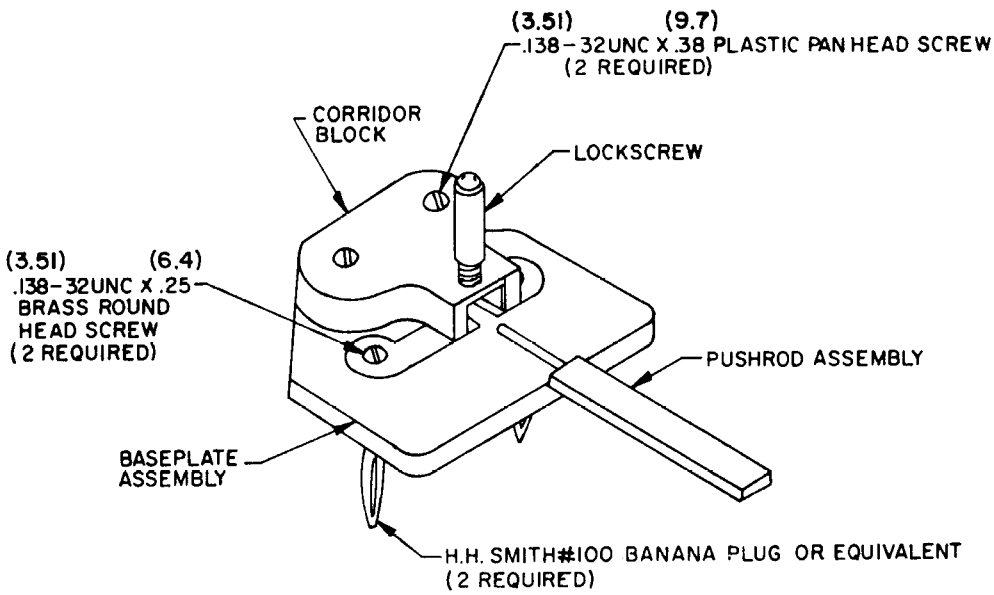

NOTES:
1. Dimensions are in inches.
2. Metric equivalents are given for general information only.
3. Metric equivalents are in parentheses.

FIGURE 3. Typical chip coil test fixture (TF-260Q-1, or equal).

TABLE II. Electrical characteristics (final).

Inspection group	Allowable variation from the initial measurements			
	Inductance	DC resistance	Self-resonant frequency	Q
Qualification inspection	Percent		Percent	Percent
Group II	+5	+(3% +0.001 ohm)	-8	-10
Group IV	∓5	∓(2% +0.001 ohm)	-10	-10
Group V	∓2	---	---	-10
Quality conformance inspection				
Group C				
Subgroup II	+5	+(3% +0.001 ohm)	-8	-10
Subgroup IV	∓5	∓(3% +0.001 ohm)	-8	-10

Supersession data: A new part numbering system with codes for termination materials was incorporated with revision A, superseding MIL-I-83446/10, dated 1 March 1979.

M83446/10- (dash number from table I) C
supersedes M83446/10- (dash number from table I).

Examples:

M83446/10-21C supersedes M83446/10-21.
M83446/10-03C supersedes M83446/10-3.

Part number: The part number shall be in the following form.

M83446/10- 04 B

Sequentially assigned dash numbers (see table I)

Termination finish (see MIL-C-83446)

Custodians:
Army - ER
Navy - EC
Air Force - 85

Review activities:
Army - MI
Navy - AS
Air Force - 19
DLA - ES

User activities:
Navy - OS
Air Force - 11

Agent:
DLA - ES

Preparing activity:
Army - ER

(Project 5950-0633-5)

☆U.S. GOVERNMENT PRINTING OFFICE: 1985 — 506-038/21336