NOTE: The document identifier and heading has been changed on this page to reflect that this is a performance specification. There are no other changes to this document. The document identifier on subsequent pages has not been changed, but will be changed the next time this document is revised.

MIL-PRF-83446/13A
11 July 1994
SUPERSEDING
MIL-C-83446/13
16 December 1980

PERFORMANCE SPECIFICATION SHEET

COILS, RADIO FREQUENCY, CHIP, FIXED

This specification is approved for use by all Departments and Agencies of the Department of Defense.

The requirements for acquiring the product described herein shall consist of this specification sheet and the issue of the following specification listed in that issue of the Department of Defense Index of Specifications and Standards (DODISS) specified in the solicitation: MIL-C-83446.

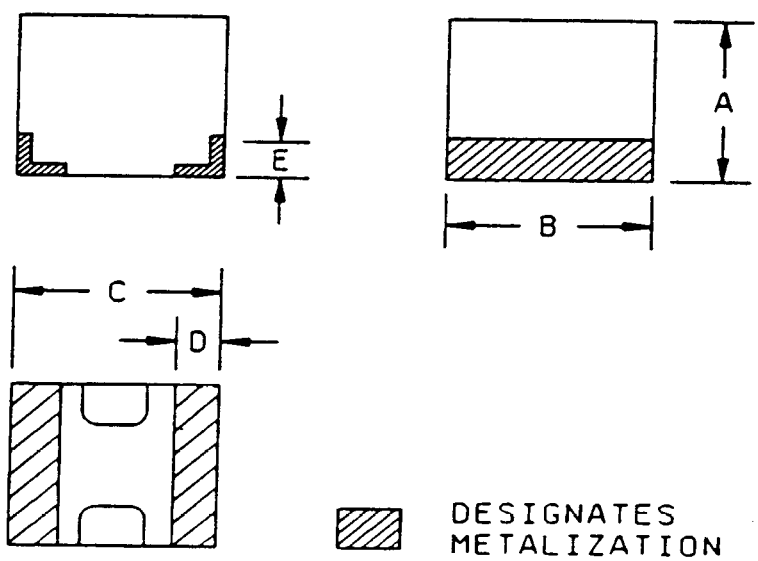

	Inches	mm
A.	.100 ±0.005	2.54 ±0.13
B.	.100 ±0.005	2.54 ±0.13
C.	.100 ±0.005	2.54 ±0.13
D.	.025 ±0.005	0.64 ±0.13
E.	.015 ±0.005	0.38 ±0.13

NOTES:
1. Dimensions are in inches.
2. Metric equivalents are given for general information only.

FIGURE 1. Fixed, chip coil.

(A) denotes changes

DISTRIBUTION STATEMENT A. Approved for public release; distribution is unlimited.

REQUIREMENTS:

Dimensions and configuration: See figure 1.

(A) Case: Diallyl phthalate.

(A) Weight: 0.02 ounce maximum.

Operating temperature range: -55°C to +125°C.

Temperature rise (at 90°C): 35°C.

Altitude: 70,000 feet.

Dielectric withstanding voltage: Method 301 of MIL-STD-202, test voltage 700 volts rms.

Barometric pressure: Method 105, test condition C, MIL-STD-202 (70,000 feet), test voltage 200 volts rms.

Electrical characteristics (initial): See table I.

Electrical characteristics (final): See table II.

TABLE I. Electrical characteristics (initial) and dash numbers.

Dash number	Inductance ±10%	Q (min)	Q (typ)	Test frequency 1/	Self-resonant frequency (min)	DC resistance (max)	Rated current (max) 2/	Incremental current 3/
	µH			MHz	MHz	Ohms	mA	mA
01	0.010	45	60	200	1200	0.020	750	
02	0.012	45	60	200	1200	0.025	750	
03	0.015	45	60	200	1200	0.035	750	
04	0.018	45	60	200	1200	0.040	750	
05	0.022	45	60	200	1000	0.045	750	
06	0.027	45	55	200	1000	0.050	750	
07	0.033	45	55	200	1000	0.055	640	
08	0.039	45	55	200	1000	0.060	600	
09	0.047	45	50	100	1000	0.065	550	
10	0.056	45	50	100	1000	0.060	520	
11	0.068	40	45	100	800	0.060	480	
12	0.082	35	40	100	800	0.080	470	
13	0.100	35	40	25.0	750	0.160	460	
14	0.120	35	40	25.0	700	0.170	455	
15	0.150	35	40	25.0	650	0.190	450	
16	0.180	35	40	25.0	600	0.200	430	
17	0.220	35	40	25.0	550	0.300	350	
18	0.270	35	40	25.0	480	0.350	310	
19	0.330	35	40	25.0	400	0.720	280	
20	0.390	35	40	25.0	380	0.800	250	
21	0.470	35	40	25.0	350	1.26	230	
22	0.560	35	40	25.0	330	1.30	220	
23	0.680	35	40	25.0	300	1.40	210	
24	0.820	35	40	25.0	250	1.50	200	
25	1.0	35	40	25.0	220	1.60	200	
26	1.2	32	40	7.90	200	1.70	200	
27	1.5	32	40	7.90	175	2.00	190	
28	1.8	32	40	7.90	150	2.00	185	

See footnotes at end of table.

TABLE I. Electrical characteristics (initial) and dash numbers - Continued.

Dash number	Inductance ±10%	Q (min)	Q (typ)	Test frequency 1/	Self-resonant frequency (min)	DC resistance (max)	Rated current (max) 2/	Incremental current 3/
	µH			MHz	MHz	Ohms	mA	mA
29	2.2	32	40	7.90	95	2.00	180	
30	2.7	30	35	7.90	85	2.00	175	
31	3.3	30	35	7.90	70	2.00	170	
32	3.9	30	35	7.90	60	2.10	165	
33	4.7	30	35	7.90	50	2.30	165	
34	5.6	30	35	7.90	40	2.50	165	
35	6.8	30	35	7.90	30	2.50	165	
36	8.2	27	32	7.90	22	2.50	120	
37	10.0	35	40	7.90	20	2.90	105	58
38	12.0	35	40	2.50	15	3.00	91	53
39	15.0	35	40	2.50	13	3.00	87	50
40	18.0	35	40	2.50	12	3.20	81	46
41	22.0	35	40	2.50	10	4.00	77	37
42	27	35	40	2.50	9.0	4.00	73	34
43	33	35	40	2.50	9.0	4.50	69	32
44	39	35	40	2.50	6.5	5.00	65	29
45	47	35	40	2.50	6.2	5.70	63	29
46	56	35	40	2.50	6.0	6.00	60	28
47	68	35	40	2.50	5.8	6.70	57	26
48	82	30	40	2.50	5.2	7.50	55	23
49	100	30	35	2.50	4.0	13.0	50	20
50	120	28	30	.790	4.0	14.0	40	20
51	150	28	30	.790	3.9	18.0	36	20
52	180	28	30	.790	3.5	20.0	33	19
53	220	28	30	.790	3.2	21.0	28	18
54	270	20	25	.790	3.1	25.0	25	17
55	330	20	25	.790	2.8	37.0	20	16
56	390	20	25	.790	2.5	39.0	17	16
57	470	20	25	.790	2.3	45.0	15	15
58	560	20	25	.790	2.2	57.0	13	14
59	680	20	25	.790	2.1	62.0	12	13
60	820	18	20	.790	2.1	78.0	11	11
61	1000	10	15	.790	1.1	96.0	10	10

1/ Test frequency range: 0.25 through 25 MHz:
Inductance shall be measured on instruments such as the HP260-A Q meter, HP4342A, HP250B RX meter, or equivalent with TF-405 test fixture, or equal (see figure 2). Fixture inductance (approximately 0.038 µH) and residual Q-meter inductance (approximately 0.01 µH) should be subtracted from indicated inductance.

Test frequency range: 25 through 200 MHz:
Inductance shall be measured on instruments such as the HP190-A Q-meter, HP260-A Q-meter, HP4342A, HP250B RX meter, or equivalent with TF-405 test fixture, or equal (see figure 2). Fixture inductance (approximately 0.009 µH) should be subtracted from calculated inductance.

2/ Maximum current allowed not to exceed the specified temperature rise.

3/ Applicable to ferrite core only.

TABLE II. Electrical characteristics (final).

Inspection group	Allowable variation from the initial measurements			
Qualification inspection	Inductance	DC resistance	Self-resonant frequency	Q
	Percent		Percent	Percent
Group II	±5	±(3% +0.001 ohm)	-8	-10
Group IV	±5	±(2% +0.001 ohm)	-10	-10
Group V	±2	- - - - -	- - -	-10
Quality conformance inspection				
Group C				
Subgroup II	±5	±(3% +0.001 ohm)	-8	-10
Subgroup IV	±5	±(3% +0.001 ohm)	-8	-10

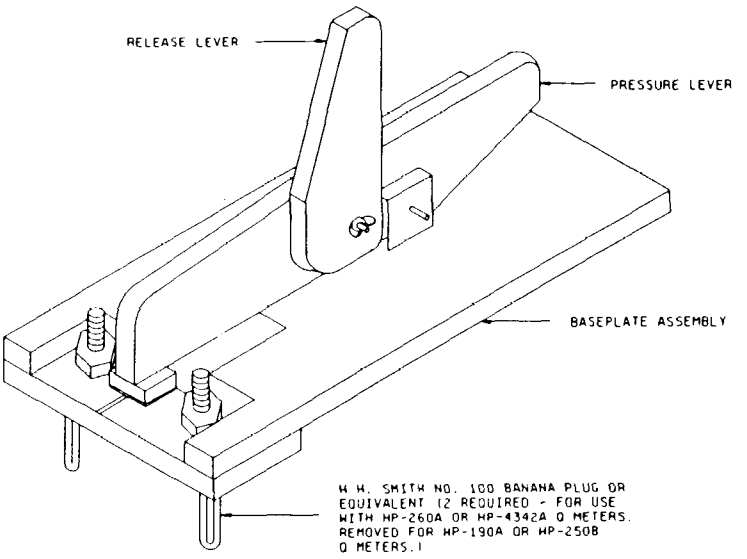

FIGURE 2. Typical chip coil test fixture (TF-405, or equal).

(A) Part or Identifying Number (PIN): The PIN shall be in the following form.

M83446/13- 04 B

Sequentially assigned dash numbers (see table I)

Termination finish (see MIL-C-83446)

CONCLUDING MATERIAL

Custodians:
Army - ER
Navy - EC
Air Force - 85

Review activities:
Army - MI
Navy - AS, OS
Air Force - 19
DLA - ES

Preparing activity:
Army - ER

Agent:
DLA - ES

(Project 5950-0830)