NOTE: The document identifier and heading has been changed on this page to reflect that this is a performance specification. *There are no other changes to this document.* The document identifier on subsequent pages has not been changed, but will be changed the next time this document is revised.

MIL-PRF-83446/19A
22 Nov 1982
SUPERSEDING
MIL-C-83446/19
1 June 1981

PERFORMANCE SPECIFICATION SHEET

COILS, RADIO FREQUENCY, VARIABLE

This specification is approved for use by all Departments and Agencies of the Department of Defense.

The complete requirements for procuring the coils described herein shall consist of this document and the latest issue of Specification MIL-C-83446.

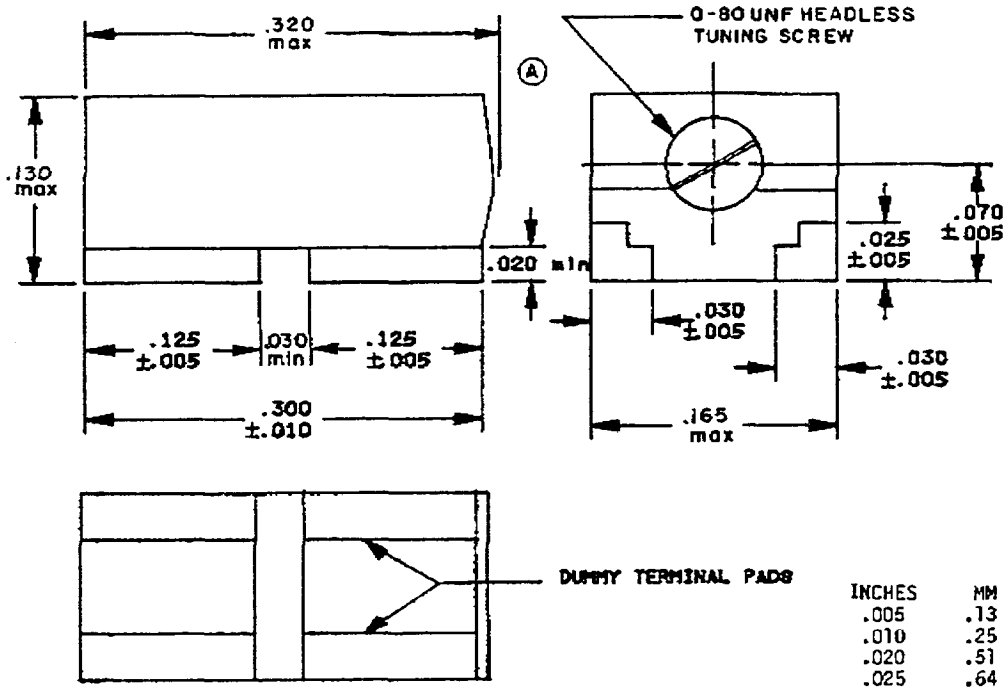

INCHES	MM
.005	.13
.010	.25
.020	.51
.025	.64
.030	.76
.070	1.78
.130	3.30
.165	4.19
.300	7.62
.320	8.13

NOTES:
1. Dimensions are in inches.
2. Metric equivalents are given for general information only and are based upon 1.00 inch = 25.4 mm.

FIGURE 1. Variable, chip coil.

(A) denotes changes

FSC 5950

REQUIREMENTS:

Dimensions and configuration: See figure 1.

Case: Epoxy.

Weight: 0.5 gram maximum.

Turning torque: .05 ounce - inches minimum, .50 ounce - inches maximum.

Operating temperature range: -55° to +125°C.

Temperature rise (at 90°C): 35°C.

Maximum operating temperature: 125°C.

Altitude: 70,000 feet.

Dielectric withstanding voltage: Method 301 of MIL-STD-202, test voltage 700 volts rms.

Barometric pressure: Method 105, test condition C, MIL-STD-202, (70,000 feet), test voltage 200 volts rms.

Electrical characteristics (initial): Shall be in accordance with table I. Test fixture shall be as shown on figure 2, or equal.

TABLE I. Electrical characteristics (initial).

Dash number	Inductance			Q min over L range	Q (typ) (at L Nom)	Test Frequency 1/	Self-resonant frequency (min)	DC resistance at 25°C (max)	Current (max) 2/	Incremental current (max) 3/
	Min	Nom	Max							
	µH	µH	µH			MHz	MHz	Ohms	mA	mA
01	0.010	0.013	0.016	50	60	200	1200	0.03	250	
02	0.018	0.022	0.025	50	60	200	1050	0.07		
03	0.036	0.044	0.051	40	50	100	740	0.13		
04	0.049	0.065	0.076	40	50	100	600	0.20		
05	0.071	0.085	0.100	30	40	25	530	0.32		
06	0.080	0.105	0.130				525	0.34	200	
07	0.107	0.129	0.150				500	0.35	200	
08	0.120	0.150	0.180				470	0.41	180	
09	0.157	0.189	0.220				400	0.45	180	
10	0.193	0.232	0.270				350	0.50	180	
11	0.236	0.283	0.330				320	0.60	140	
12	0.243	0.300	0.370				275	0.62	140	
13	0.336	0.403	0.470				255	0.65	100	
14	0.400	0.480	0.560				230	0.75		
15	0.485	0.583	0.680				190	0.85		
16	0.565	0.660	0.760				170	0.88		
17	0.586	0.703	0.820				150	0.90		
18	0.616	0.783	0.950				145	0.95		
19	0.666	0.833	1.00	25	35		140	0.98		
20	1.00	1.25	1.50			7.9	110	1.0		
21	1.47	1.84	2.20				100	1.4	80	
22	1.80	2.25	2.70				89	1.6	75	
23	2.20	2.75	3.30				77	1.8	65	
24	3.13	3.92	4.70				49	2.2	60	
25	3.87	4.84	5.80				38	2.8	58	
26	4.53	5.67	6.80				36	3.0	55	
27	5.47	6.84	8.20				21	3.0	55	
28	6.00	7.50	10.00			2.5	20	2.8	55	50
29	6.50	9.75	13.00			2.5	19	3.0	53	45

See footnotes at end of table.

TABLE I. Electrical characteristics (initial) - Continued.

Dash number	Inductance Min	Inductance Nom	Inductance Max	Q min over L range	Q (typ) (at L Nom)	Test Freq-uency 1/	Self-resonant frequency (min)	DC resistance at 25°C (max)	Current (max) 2/	Incre-mental current (max) 3/
	µH	µH	µH			MHz	MHz	Ohms	mA	mA
30	8.00	12.00	16.00	25	35	2.5	16	3.4	50	40
31	10.00	15.00	20.00				14	3.5	43	37
32	11.00	16.50	22.00				12	4.0	43	36
33	15.00	22.50	30.00				11	4.5	40	32
34	18.00	27.00	36.00				10	5.0	40	31
35	23.00	35.00	47.00				6.5	5.7	39	29
36	28.00	42.00	56.00				6.3	7.0	35	28
37	34.00	51.00	68.00				6.2	8.0	30	26
38	37.00	56.00	75.00				5.9	9.0	30	25
39	43.00	65.00	86.00				5.6	10.0	28	23
40	50.00	75.00	100				5.3	12.0	27	20
41	60.00	90.00	120	20	30	0.79	4.4	14.0	25	20
42	75.00	112.5	150				4.0	18.0	22	20
43	235	353	470				2.1	30.0	16	16
44	340	510	680				2.1	35.0	15	15
45	500	750	1000				1.1	75.0	11	11

1/ Test frequency range: 0.25 through 25 MHz.

Inductance shall be measured on instruments such as the HP260-A Q Meter, HP4342A, HP250B RX Meter, or equivalent with TF-405 test fixture, or equal (see figure 2). Fixture inductance (approximately 0.038 µH) and residual Q-Meter inductance (approximately 0.01 µH) should be subtracted from indicated inductance.

Ⓐ Test frequency range: 100 through 200 MHz.

Ⓐ Inductance shall be measured on instruments such as the HP260-A Q Meter, HP250B RX Meter, or equivalent with TF-405 test fixture, or equal (see figure 2). Fixture inductance (approximately 0.009 µH) should be subtracted from calculated inductance.

2/ Maximum current allowed not to exceed specified temperature rise.

3/ Applicable to ferrite core only.

Electrical characteristics (final): See table II.

TABLE II. Electrical characteristics (final).

Inspection group	Allowable variation from the initial measurements			
	Inductance	DC resistance	Self-resonant frequency	Q
Qualification inspection	Percent		Percent	Percent
Group II	±5	±(3% +0.001 ohm)	-8	-10
Group IV	±5	±(2% +0.001 ohm)	-10	-10
Group V	±2	---	---	-10
Quality conformance inspection				
Group C				
Subgroup II	±5	±(3% +0.001 ohm)	-8	-10
Subgroup IV	±5	±(3% +0.001 ohm)	-8	-10

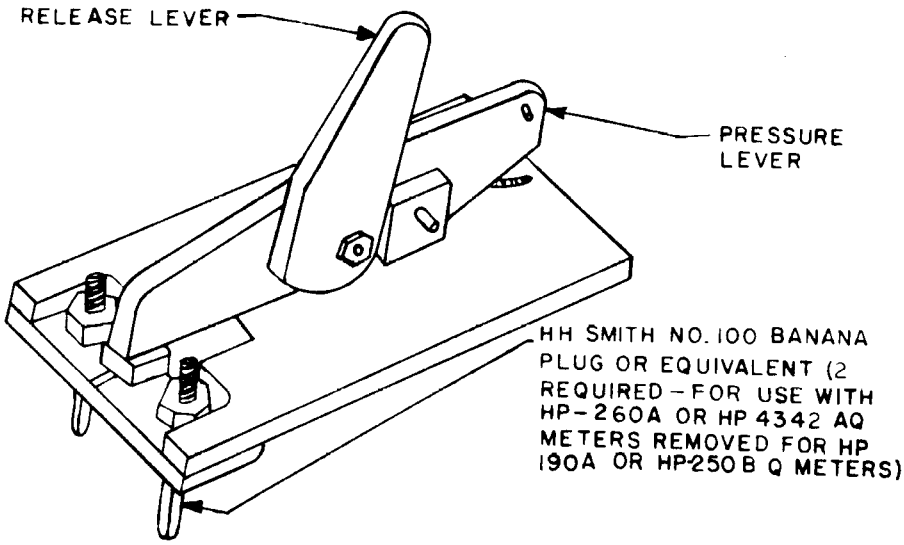

FIGURE 2. Typical chip coil test fixture (TF-405 or equal).

Part number. The part number shall be in the following form.

M83446/19- 04 B

Sequentially assigned dash numbers (see table I)

Termination finish (see MIL-C-83446)

Custodians:
Army - ER
Navy - EC
Air Force - 85

Review activities:
Army - MI
Navy - AS
Air Force - 19
DLA - ES

User activities:
Navy - OS
Air Force - 11

Agent:
DLA - ES

Preparing activity:
Army - ER

(Project 5950-0590-1)

☆U.S. GOVERNMENT PRINTING OFFICE: 1982 – 606-034/231