NOTE: The document identifier and heading has been changed on this page to reflect that this is a performance specification. *There are no other changes to this document. The document identifier* on subsequent pages has not been changed, but will be changed the next time this document is revised.

INCH-POUND

MIL-PRF-83446/20
20 DECEMBER 1988

PERFORMANCE SPECIFICATION SHEET

COILS, RADIO FREQUENCY, CHIP, FIXED, PHENOLIC CORE

This specification is approved for use by all Departments and Agencies of the Department of Defense.

The requirements for acquiring the product described herein shall consist of this specification sheet and the issue of the following specification listed in that issue of the Department of Defense Index of Specifications and Standards (DODISS) specified in the solicitation: MIL-C-83446.

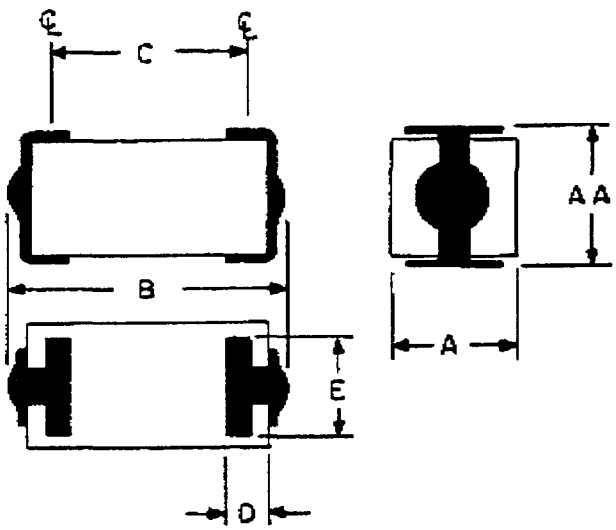

Letter	Dimensions	
	Minimum	Maximum
A	.075 (1.91)	.095 (2.41)
AA	.095 (2.41)	.115 (2.92)
B	.230 (5.84)	.255 (6.48)
C	.130 (3.30)	.160 (4.06)
D	.040 (1.02)	.060 (1.52)
E	.075 (1.91)	.081 (2.06)

NOTES:
1. Dimensions are in inches.
2. Metric equivalents are given for general information only.
3. Metric equivalents are in parentheses.
4. Dimensions AA and B are measured over the terminals.

FIGURE 1. Dimensions and configuration.

DISTRIBUTION STATEMENT A. Approved for public release; distribution is unlimited.

TABLE I. Electrical characteristics (initial).

Dash number	Inductance µH ±10%	Q (min)	Test frequency (L and Q) MHz	Self resonant frequency MHz (min)	DC resistance ohms (max)	Current rating mA (max)
-01	.10	25	25	640	.14	865
-02	.12	25	25	610	.17	785
-03	.15	25	25	530	.20	725
-04	.18	25	25	510	.22	690
-05	.22	25	25	480	.26	635
-06	.27	25	25	440	.40	510
-07	.33	25	25	410	.50	455
-08	.39	25	25	380	.60	415
-09	.47	25	25	340	.63	405

TABLE II. Electrical characteristics (final).

Inspection group	Allowable percent variation from the initial measurement			
	Inductance	Q	Self-resonant frequency	DC resistance
Qualification inspection:				
Group II	±5	-10	-8	±3 (+.001 ohm)
Group IV	±5	-10	-10	±3 (+.001 ohm)
Group V	±5	-15	---	---
Quality conformance inspection:				
Group C				
Subgroup II	±5	-15	-10	±2 (+.001 ohm)
Subgroup IV	±5	-10	-8	±3 (+.001 ohm)

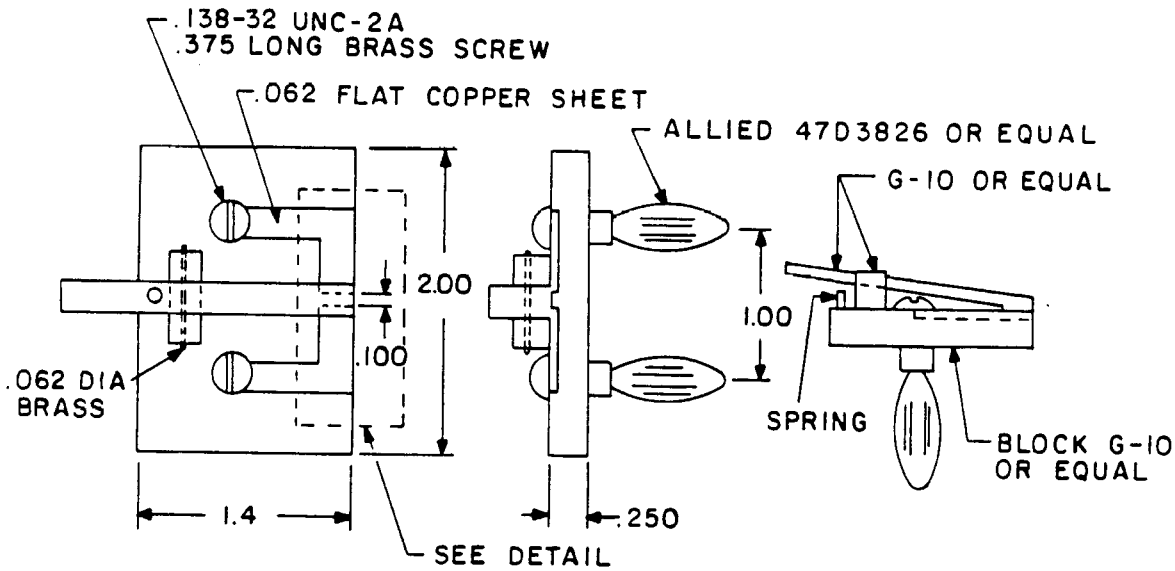

Inches	mm
.003	0.08
.010	0.25
.062	1.57
.063	1.60
.100	2.54
.138	3.51
.250	6.35
.312	7.92
.375	9.52
1.000	25.40
1.400	35.56
2.000	50.80

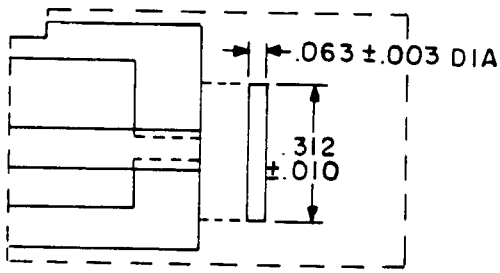

SHORTING BAR LOCATION DETAIL

NOTES:
1. Dimensions are in inches.
2. Metric equivalents are given for general information only.
3. Shorting bar material is brass.
4. The total fixture and residual inductance is approximately .049 μH (for references only).

FIGURE 2. General test fixture, (TF-397).

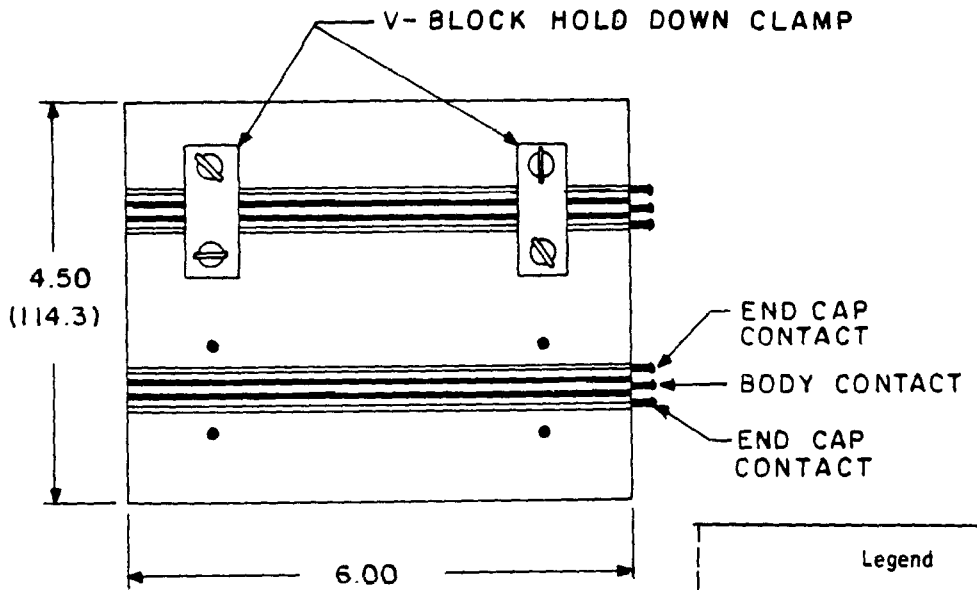

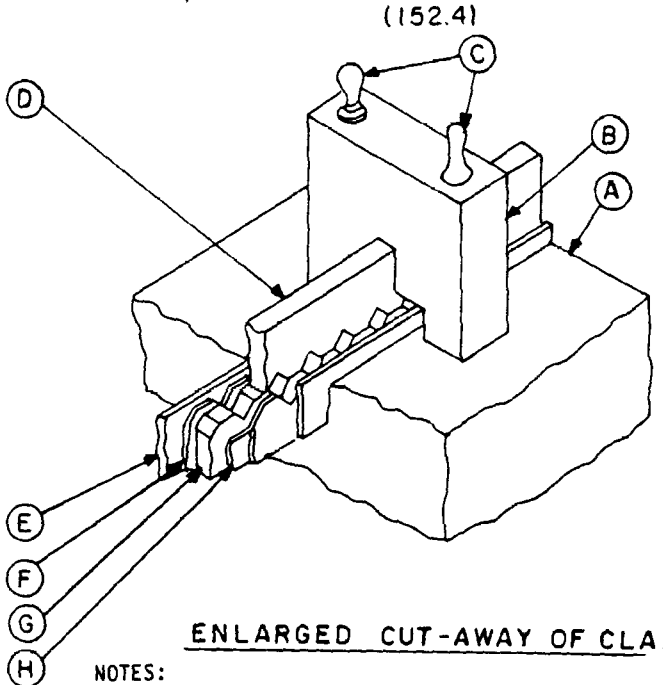

ENLARGED CUT-AWAY OF CLAMP

Legend	
LTR	Description
A	G-10 base
B	Upper V-block hold-down clamp
C	Clamp screws
D	Upper V-block (body contact)
E	End cap contact retaining wall
F	End cap contact V-block (in contact with E)
G	Lower V-block (body contact)
H	G-10 insulators (separating G from F/E)

NOTES:
1. Dimensions are in inches.
2. Metric equivalents are given for general information only.
3. Metric equivalents are in parentheses.

FIGURE 3. Test fixture for insulation resistance, dielectric withstanding voltage and barometric pressure.

REQUIREMENTS:

Dimensions and configuration: See figure 1.

Bond strength: Force 2 pounds.

Weight: 0.19 gram maximum.

Operating temperature range: -55°C to +125°C.

Temperature rise (at +90°C): +35°C.

Maximum operating temperature: +125°C.

Altitude: 70,000 feet.

Dielectric withstanding voltage: Method 301 of MIL-STD-202, test voltage 500 volts rms.

Barometric pressure: Method 105, test condtion C, MIL-STD-202, (70,000 feet), test voltage 200 volts rms.

Electrical characteristics (initial): See table I.

Electrical characteristics (final): See table II.

Test fixture: Tests shall be performed using test fixtures shown on figures 2 and 3, or equivalent.

M83446/20	04	B
Sequentially assigned dash numbers (see table I)		
Termination finish (see MIL-C-83446)		

CONCLUDING MATERIAL

Custodians:
Army - ER
Navy - EC
Air Force - 85

Review activities:
Army - MI
Navy - AS
Air Force - 19
DLA - ES

User activities:
Navy - OS
Air Force - 11

Preparing activity:
Army - ER

Agent:
DLA - ES

(Project 5950-0701-01)