PERFORMANCE SPECIFICATION SHEET

COILS, RADIO FREQUENCY, CHIP, FIXED, SHIELDED, MOLDED, SURFACE MOUNT

This specification is approved for use by all Departments and Agencies of the Department of Defense.

The requirements for acquiring the product described herein shall consist of this specification sheet and MIL-PRF-83446.

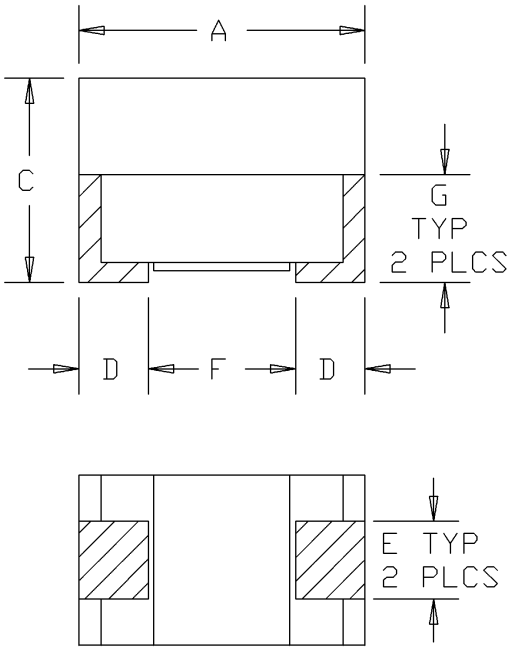

	Inches	mm
A	0.166 to 0.190	4.22 to 4.83
B	0.118 to 0.134	3.00 to 3.40
C	0.118 to 0.134	3.00 to 3.40
D	0.015 Min.	0.38 Min.
E	0.054 to 0.078	1.37 to 1.98
F	0.118 (Ref. Only)	3.00 (Ref. Only)
G	0.066 (Ref. Only)	1.7 (Ref only)

NOTES:
1. Dimensions are in inches.
2. Metric equivalents are given for general information only.

FIGURE 1. Dimensions and configuration.

TABLE I. Electrical characteristics (initial).

Dash number	Inductance (μH) (±10%)	Q (min)	Test frequency MHz	Self- 1/ resonant frequency MHz (min)	DC resistance ohms (max)	Current rating mA (max)
-01	0.10	50	25	460	0.09	1,490
-02	0.12	50	25	400	0.10	1,412
-03	0.15	50	25	390	0.11	1,347
-04	0.18	50	25	350	0.12	1,290
-05	0.22	50	25	310	0.15	1,154
-06	0.27	50	25	280	0.18	1,053
-07	0.33	40	25	240	0.22	952
-08	0.39	40	25	215	0.26	876
-09	0.47	40	25	205	0.31	802
-10	0.56	40	25	185	0.37	735
-11	0.68	40	25	166	0.44	675
-12	0.82	40	25	155	0.53	614
-13	1.0	40	7.9	160	0.35	755
-14	1.2	40	7.9	140	0.38	725
-15	1.5	40	7.9	110	0.40	706
-16	1.8	40	7.9	100	0.43	681
-17	2.2	40	7.9	90	0.46	658
-18	2.7	40	7.9	67	0.49	638
-19	3.3	40	7.9	61	0.70	534
-20	3.9	40	7.9	56	0.84	487
-21	4.7	40	7.9	50	0.90	471
-22	5.6	40	7.9	40	1.00	447
-23	6.8	40	7.9	32	1.20	408
-24	8.2	40	7.9	30	1.44	372
-25	10	50	2.5	25	1.80	333
-26	12	50	2.5	22	2.00	315
-27	15	50	2.5	18	2.20	301
-28	18	50	2.5	15	2.40	288
-29	22	50	2.5	14	2.60	277
-30	27	50	2.5	13	2.80	267
-31	33	50	2.5	12	3.00	258
-32	39	50	2.5	11	3.20	250
-33	47	50	2.5	9.0	3.40	242
-34	56	50	2.5	8.0	3.60	235
-35	68	50	2.5	7.6	4.30	215
-36	82	50	2.5	7.2	5.20	196
-37	100	40	0.79	7.0	7.00	169
-38	120	40	0.79	6.0	7.50	163
-39	150	40	0.79	5.0	8.00	158
-40	180	40	0.79	4.5	8.50	153
-41	220	40	0.79	4.2	9.00	149
-42	270	40	0.79	4.0	11.0	135
-43	330	40	0.79	3.7	12.0	129
-44	390	40	0.79	3.5	18.0	105

See footnote at end of table.

TABLE I. Electrical characteristics (initial). - Continued.

Dash number	Inductance (μH) (±10%)	Q (min)	Test frequency MHz	Self- 1/ resonant frequency MHz (min)	DC resistance ohms (max)	Current rating mA (max)
-45	470	40	0.79	3.3	24.0	91
-46	560	40	0.79	2.8	28.0	84
-47	680	40	0.79	2.6	32.0	79
-48	820	40	0.79	2.2	40.0	71
-49	1,000	40	0.79	2.0	55.0	60

1/ The specified minimum values of Self Resonant Frequency (SRF) over 250 MHz are estimates and to be used for design reference only.

TABLE II. Electrical characteristics (final).

Inspection group	Allowable percent variation from the initial measurement			
Qualification inspection:	Inductance	Q	Self-resonant frequency 1/	DC resistance
Group II	±5	-10	-8	±3 (+.001 ohm)
Group IV	±5	-10	-10	±2 (+.001 ohm)
Group V	±2	-10	-----	-----
Conformance inspection:				
Group C				
Subgroup II	±5	-10	-8	±3 (+.001 ohm)
Subgroup IV	±5	-10	-8	±3 (+.001 ohm)

1/ Not applicable to Self Resonant Frequency (SRF) exceeding 250 MHz.

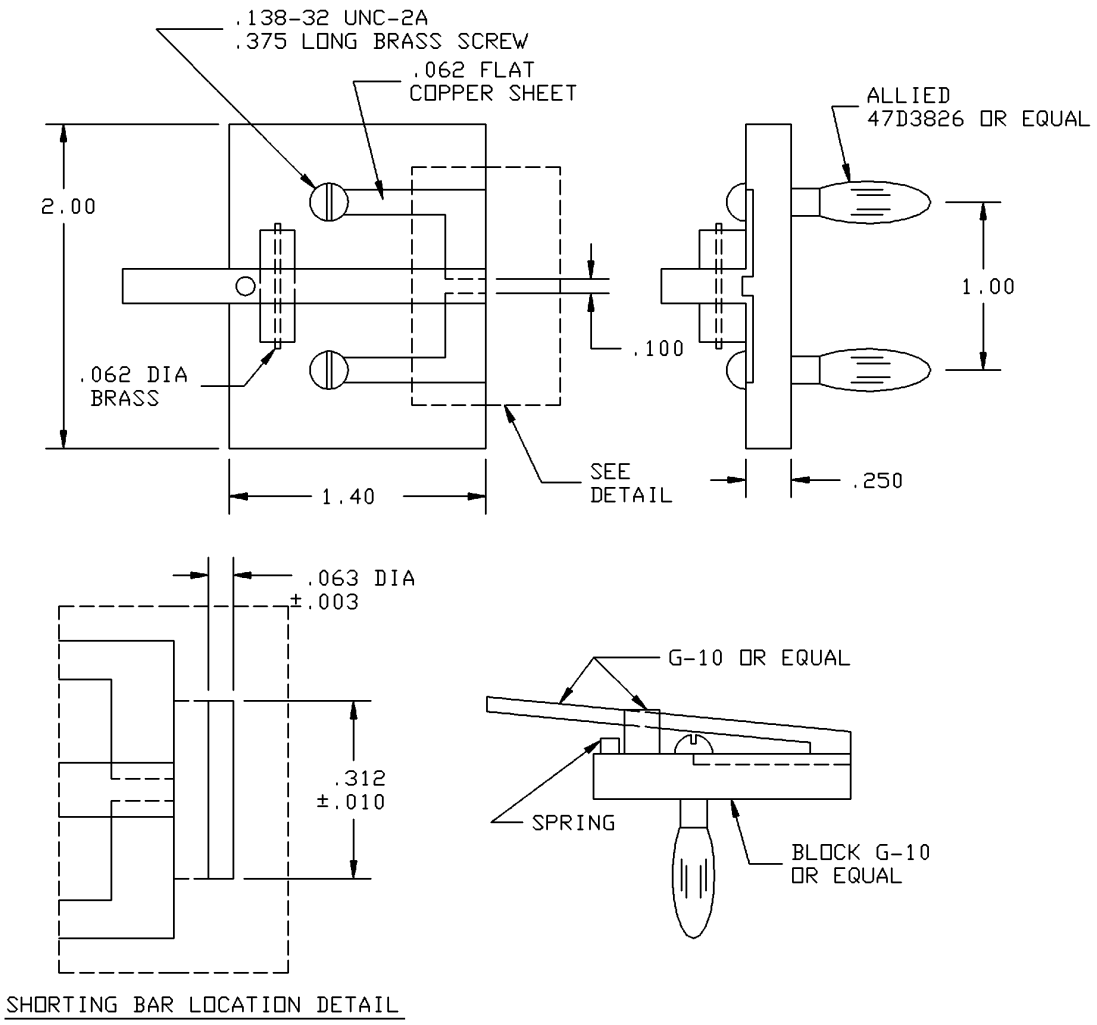

NOTES:
1. Dimensions are in inches.
2. Metric equivalents are given for general information only.
3. Shorting bar material is brass.
4. The total fixture and residual inductance is approximately .049 μH (for references only).

FIGURE 2. Typical chip coil test fixture.

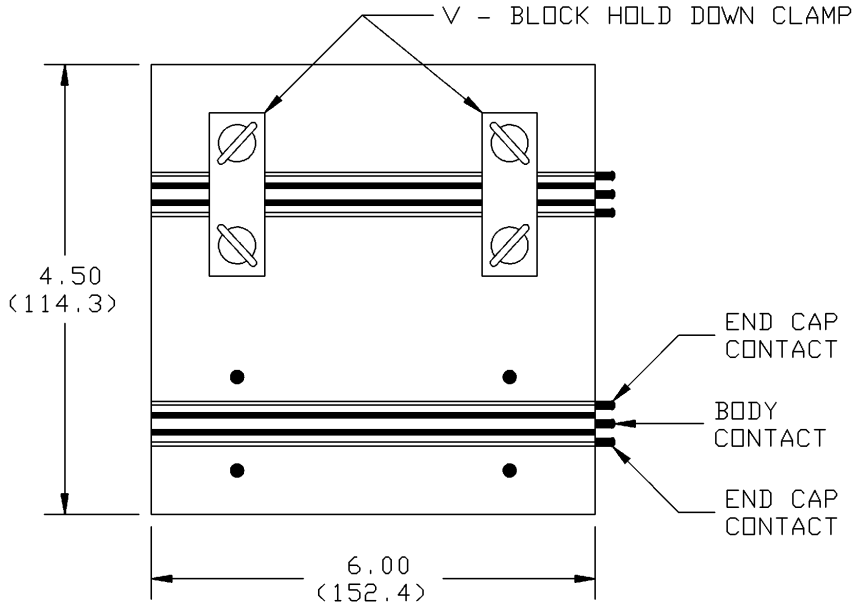

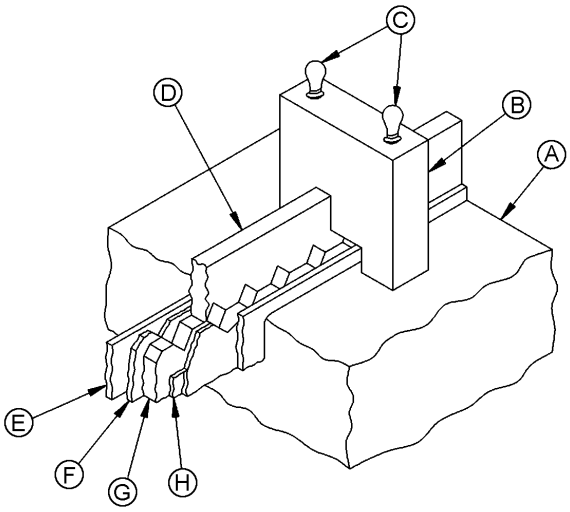

ENLARGED CUT-AWAY OF CLAMP

Legend	
Ltr	Description
A	G-10 base
B	Upper V-block hold-down clamp
C	Clamp screws
D	Upper V-block (body contact)
E	End cap contact retaining wall
F	End cap contact V-block (in contact with E)
G	Lower V-block (body contact)
H	G-10 insulators (separating G from F/E)

NOTES:
1. Dimensions are in inches.
2. Metric equivalents are given for general information only.
3. Metric equivalents are in parentheses.

FIGURE 3. Test fixture for insulation resistance, dielectric withstanding voltage and barometric pressure.

REQUIREMENTS:

Dimensions and configuration: See figure 1.

Bond strength: Force 2.0 pounds.

Weight: 0.15 gram maximum.

Operating temperature range: -55°C to +125°C.

Temperature rise (at +90°C): +35°C.

Maximum operating temperature: +125°C.

Altitude: 70,000 feet.

Dielectric withstanding voltage: Method 301 of MIL-STD-202, test voltage 200 V rms.

Barometric pressure: Method 105, test condition C, MIL-STD-202, (70,000 feet), test voltage 80 V rms.

Electrical characteristics (initial): See table I.

Electrical characteristics (final): See table II.

Test fixture: Test shall be performed using text fixture shown on figure 2 and 3, or equivalent.

Part or Identifying Number (PIN): The PIN shall be in the following form:

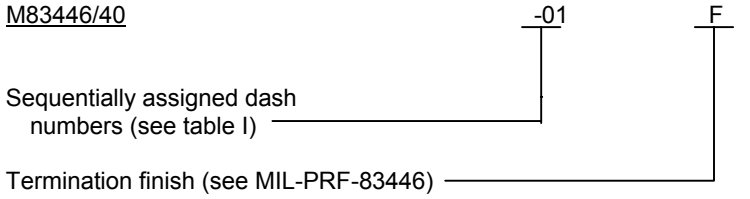

Note: “Suffix “P” denotes lead (Pb) free solderable termination finish”

Referenced documents. In addition to MIL-PRF-83446, this document references MIL-STD-202.

Custodians:
Army - CR
Navy - EC
Air Force - 11

Review activities:
Navy - AS, OS
Air Force - 19

Preparing activity:
DLA - CC

(Project 5950-1182)