INCH-POUND

MIL-PRF-83500/1C
1 October 2002
SUPERSEDING
MIL-C-83500/1B(USAF)
28 June 1993

PERFORMANCE SPECIFICATION SHEET

CAPACITORS, FIXED, ELECTROLYTIC (NONSOLID ELECTROLYTE), TANTALUM ANODE AND CATHODE, STYLES CRL01, CRL02, AND CRL03

This specification is approved for use by all departments and agencies of the Department of Defense.

The requirements for acquiring the capacitors described herein shall consist of this specification and MIL-PRF-83500.

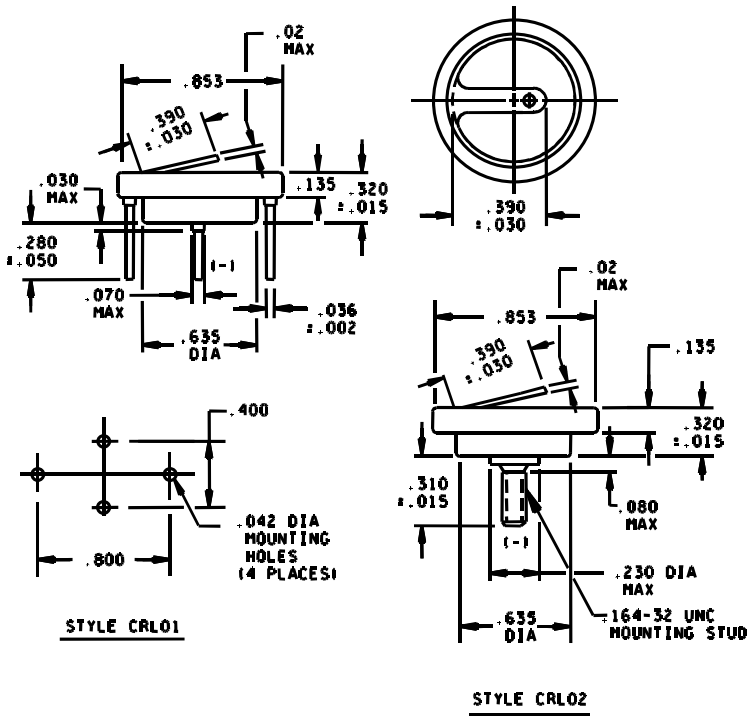

FIGURE 1. Styles CRL01, CRL02, and CRL03 capacitors.

DISTRIBUTION STATEMENT A. Approved for public release; distribution is unlimited.

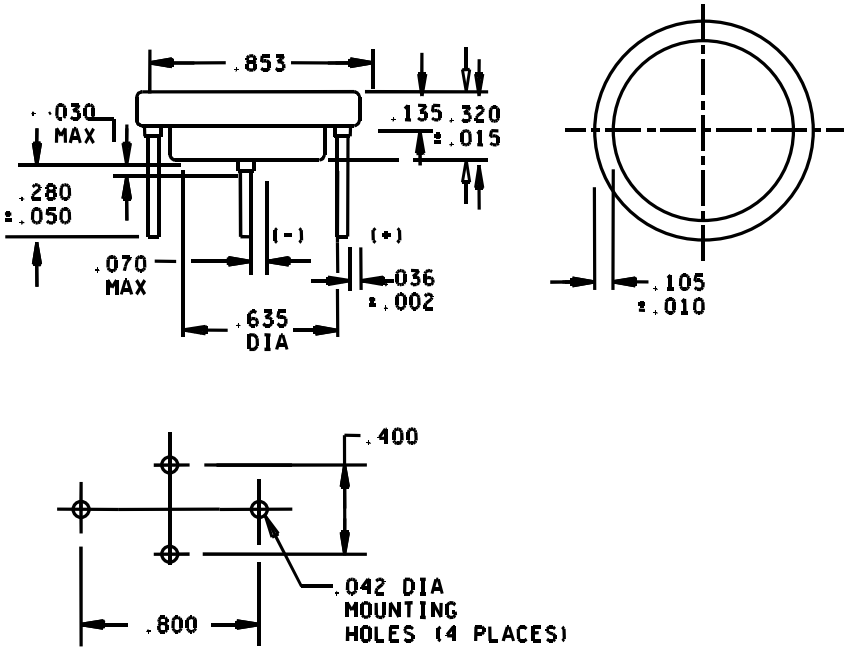

STYLE CRL03

Inches	mm	Inches	mm
.002	0.05	.135	3.43
.010	0.25	.230	5.84
.015	0.38	.280	7.11
.020	0.50	.310	7.87
.030	0.76	.320	8.13
.036	0.91	.390	9.91
.042	1.07	.400	10.16
.050	1.27	.635	16.13
.070	1.78	.800	20.32
.080	2.03	.853	21.67
.105	2.67		

NOTES:

1. Dimensions are in inches.
2. Metric equivalents are given for general information only.
3. Unless otherwise specified, tolerance is ±.010 inch (0.25 mm).

FIGURE 1. Styles CRL01, CRL02, and CRL03 capacitors – Continued.

TABLE I. Capacitor characteristics.

DC rated voltage	Cap. (nom.)	Cap. tolerance	DC leakage (max)		Dissipation factor (max)	Impedance (max) -55°C	Capacitance change			PIN M83500/01-		
			+25°C	+85°C +125°C			-55°C	+85°C	+125°C	Style CRL01	Style CRL02	Style CRL03
Volts	µF	percent	µA	µA	percent	ohms	percent	percent	percent			
6	1,200	20	8	24	144	20	-90	+30	+35	0001	1001	2001
8	1,000	20	8	24	120	20	-90	+27	+30	0002	1002	2002
10	820	20	8	24	100	20	-85	+22	+25	0003	1003	2003
15	680	10	8	24	85	20	-85	+17.5	+20	0004	1004	2004
15	680	20	8	24	85	20	-85	+17.5	+20	0005	1005	2005
20	560	10	5	24	75	25	-85	+17.5	+20	0006	1006	2006
20	560	20	5	24	75	25	-85	+17.5	+20	0007	1007	2007
20	470	10	5	24	72	25	-85	+12.5	+15	0008	1008	2008
20	470	20	5	24	72	25	-85	+12.5	+15	0009	1009	2009
20	390	10	5	24	60	30	-80	+12.5	+15	0010	1010	2010
20	390	20	5	24	60	30	-80	+12.5	+15	0011	1011	2011
30	330	10	5	24	48	30	-75	+12.5	+15	0012	1012	2012
30	330	20	5	24	48	30	-75	+12.5	+15	0013	1013	2013
30	270	10	5	24	40	30	-70	+12.5	+15	0014	1014	2014
30	270	20	5	24	40	30	-70	+12.5	+15	0015	1015	2015
50	220	10	3	24	33.6	35	-70	+12.5	+15	0016	1016	2016
50	220	20	3	24	33.6	35	-70	+12.5	+15	0017	1017	2017
50	180	10	3	24	27.6	35	-65	+12.5	+15	0018	1018	2018
50	180	20	3	24	27.6	35	-65	+12.5	+15	0019	1019	2019
50	150	10	3	24	22.8	40	-65	+10	+12.5	0020	1020	2020
50	150	20	3	24	22.8	40	-65	+10	+12.5	0021	1021	2021
75	120	10	3	24	25.7	45	-55	+10	+12.5	0022	1022	2022
75	120	20	3	24	25.7	45	-55	+10	+12.5	0023	1023	2023
75	100	10	3	24	23	50	-40	+10	+12.5	0024	1024	2024
75	100	20	3	24	23	50	-40	+10	+12.5	0025	1025	2025
75	82	10	3	18	20.7	55	-30	+10	+12.5	0026	1026	2026
75	82	20	3	18	20.7	55	-30	+10	+12.5	0027	1027	2027
75	68	10	3	15	19	60	-30	+8	+10	0028	1028	2028
75	68	20	3	15	19	60	-30	+8	+10	0029	1029	2029
100	56	10	2	20	17.5	60	-25	+8	+10	0030	1030	2030
100	56	20	2	20	17.5	60	-25	+8	+10	0031	1031	2031
125	47	10	5	50	15	60	-20	+8	+10	0032	1032	2032
125	47	20	5	50	15	60	-20	+8	+10	0033	1033	2033

REQUIREMENTS:

Design and construction:

Dimensions and configuration: See figure 1.

Case type: Tantalum anode and cathode with outer jacket of nickel.

Seal type: Nonhermatic.

Terminals: See figure 1.

Rated temperature: -55°C to +85°C, voltage derated linearly to a maximum of 66 percent of rated voltage between +85°C to +125°C.

Rated voltage: See table I.

DC leakage (DCL) (max) (at +25°C): See table I.

Capacitance (Cap.) (nominal): See table I.

Cap. tolerance: ±10 percent or ±20 percent as shown in table I.

Dissipation factor (DF) (max): See table I.

Solderability: In accordance with MIL-PRF-83500.

Terminal tabs for styles CRL01 and CRL02.

Radial pin terminals for styles CRL01 and CRL03.

Stability at low and high temperatures:

Step 1 (+25°C):

DCL (max): See table I.

Cap.: Within tolerance of table I value.

DF (max): Shall not exceed initial requirement.

Step 2 (-55°C):

Impedance: See table I.

ΔCap.: See table I.

Step 3 (+25°C):

DCL (max): See table I.

ΔCap.: Within $\pm$5 percent of initial measurement.

DF (max): Shall not exceed initial requirement.

Step 4 (+85°C):

DCL (max): See table I.

ΔCap.: See table I.

DF (max): Shall not exceed initial requirement.

Step 5 (+125°C):

DCL (max): See table I.

ΔCap.: See table I.

DF (max): Shall not exceed initial requirement.

Step 6 (+25°C):

DCL (max): See table I.

ΔCap.: Within $\pm$5 percent of initial measurement.

DF (max): Shall not exceed initial requirement.

Barometric pressure (reduced): In accordance with MIL-PRF-83500. DC rated voltage applied.

Reverse voltage: In accordance with MIL-PRF-83500.

Life at +85°C:

2,000 hours (qualification):

DCL (max): See table I (+85°C and +25°C).

ΔCap.: Within $\pm$10 percent of initial measurement.

DF (max): Shall not exceed initial requirement.

240 hours (group B):

DCL (max): See table I (+85°C and +25°C).

ΔCap.: Within ±10 percent of initial measurement.

DF (max): Shall not exceed initial requirement.

6,000 and 10,000 hours (group C):

DCL (max) at +85°C: Shall not exceed 125 percent of +25°C value of table I.

DCL (max): See table I (+25°C).

ΔCap.: Within +10 percent, -20 percent of initial measurement.

DF (max): 150 percent of initial requirement.

Life at +125°C:

DCL (max): See table I (+125°C and +25°C).

ΔCap.: Within +10 percent, -20 percent of initial measurement.

DF (max): 150 percent of initial requirement.

Vacuum life at +125°C:

DCL: See table I (+125°C and +25°C).

ΔCap.: Within ±20 percent of initial measurement.

DF: See table I.

Weight loss: 4.1 milligrams maximum.

AC ripple life at +125°C:

DCL (max): See table I (+125°C and +25°C).

ΔCap.: Within ±15 percent of initial measurement.

DF (max): See table I.

Marking: In accordance with MIL-PRF-83500.

Part or Identifying Number (PIN): M83500/01- (dash number from table I).

Polarity: Plus (+) symbol marked on positive terminal.

Revision letters are not used to denote changes due to the extensiveness of the changes.

Custodians:
Air Force - 11
Navy - EC
DLA - CC

Preparing activity:
DLA - CC

(Project 5910-2159-01)