MILITARY SPECIFICATION SHEET

RECEPTACLE, PLUG, ELECTRICAL, 4-PIN GROUNDED, 40-AMPERE, 450-VOLT, ALTERNATING CURRENT, 60-HERTZ (SYMBOL NO. 717.1)

(C) This specification is approved for use within the Naval Sea Systems Command, Department of the Navy, and is available for use by all Departments and Agencies of the Department of Defense.

(C) The requirements for acquiring the receptacle described herein shall consist of this specification and the latest issue of MIL-R-2726.

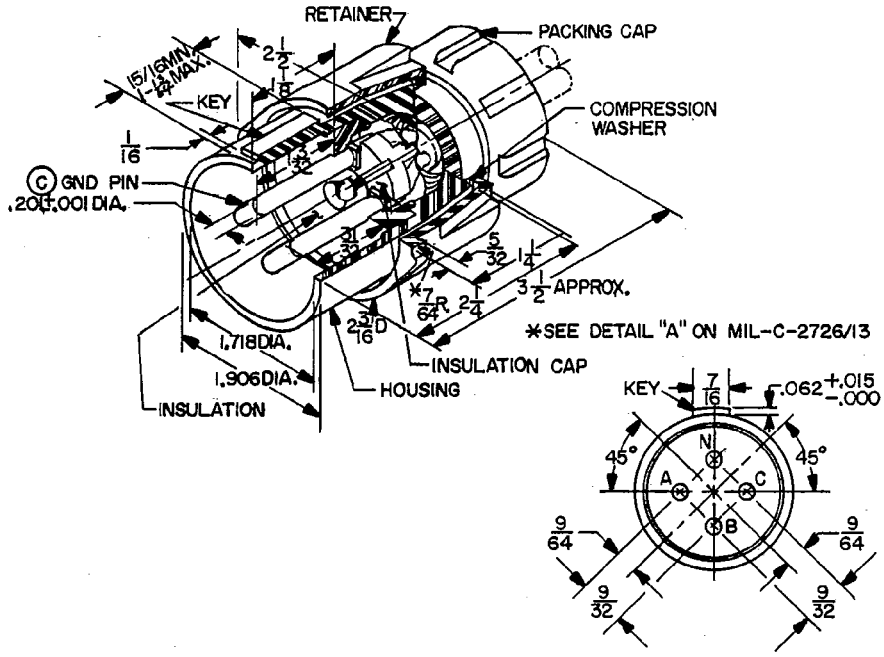

SH 9073

NOTES:

(C) 1. Dimensions are in inches. Unless otherwise specified, tolerances are ± 1/64 inch for fractions and ± 0.005 inch for decimals. Angular tolerance is ± 1/2 degree.

2. Supersedes: Drawing 9000-S6202-73882, pc. 30, symbol 717.

FIGURE 1. Dimensions and configuration.

(C) denotes changes.

AMSC N/A FSC 5935

DISTRIBUTION STATEMENT A Approved for public release; distribution unlimited

REQUIREMENTS:

1. Dimensions and configuration: See figure 1.
2. Effectiveness of enclosure: Watertight in accordance with MIL-STD-108 when coupled with mating receptacle.
3. Strain relief: 30 pounds.
4. Material: Housing and retainer - polyamide (nylon).
   Plug insulation and cap - type MAI-60 of MIL-M-14.
   Compression washer - beryllium copper (spring grade).
5. Contact hardness: Minimum of Rockwell 80F.
6. Packing assembly: MIL-S-19622/19, part number M19622/19-0005 (not furnished).
7. Mating receptacle: MIL-R-2726/9, part number M2726/9-001 or M2726/9-002 (not furnished).
8. Test cable: MIL-C-24643 and MIL-C-24643/3 (not furnished).
9. Assembly: Tapping of insulation (inserts not required) for assembly with housing is permitted.
10. Packing cap: MIL-S-19622/10, part number M19622/10-0005 to be furnished.
11. Electrical rating: 40-amperes, 450-volt, alternating current, 60-hertz.
12. Part number: M2726/3-001.
13. Contact finish: Silver plate.

QUALITY ASSURANCE:

Quality assurance shall be as specified in MIL-R-2726 and table I herein. The first article and quality conformance inspections shall consist of the inspections as specified in table I, in the order shown.

TABLE I. First article and quality conformance inspection.

Inspection	Requirement	Test method	First article	Quality conformance
Examination	3.1, 3.3, 3.4, 3.5, 3.6 and 3.7	4.6.1	X	X
Insulation resistance	3.5.1	4.7.1	X	X
Dielectric withstanding voltage	3.5.2	4.7.2	X	X
Contact resistance	3.5.3.1	4.7.3.1	X	X
Endurance	3.5.5	4.7.5	X	
Salt spray	3.5.11	4.7.11	X	
Contact resistance	3.5.3.1	4.7.3.1	X	
Current load	3.5.12	4.7.12	X	
Vibration	3.5.9	4.7.9	X	
Shock	3.5.10	4.7.10	X	
Effectiveness of enclosure	3.5.4	4.7.4	X	X
Dielectric withstanding voltage	3.5.2	4.7.2	X	
Mechanical abuse	3.5.8	4.7.8	X	
Ball drop impact	3.5.15	4.7.15	X	
Strain relief	3.5.7	4.7.7	X	
Rockwell hardness	3.5.14	4.7.14	X	

Preparing activity:
Navy - SH
(Project 5935-N255-4)