MILITARY SPECIFICATION SHEET

(A) RECEPTACLE, ELECTRICAL, 3-PIN GROUNDED, 10-AMPERE, 450-VOLT, 400-HERTZ, SINGLE PHASE (SYMBOL NO. 1264)

(A) This specification is approved for use within the Naval Sea Systems Command, Department of the Navy, and is available for use by all Departments and Agencies of the Department of Defense.

(A) The requirements for acquiring the receptacle described herein shall consist of this specification and the latest issue of MIL-R-2726.

(A) denotes changes.

AMSC N/A
FSC 5935
DISTRIBUTION STATEMENT A Approved for public release; distribution unlimited

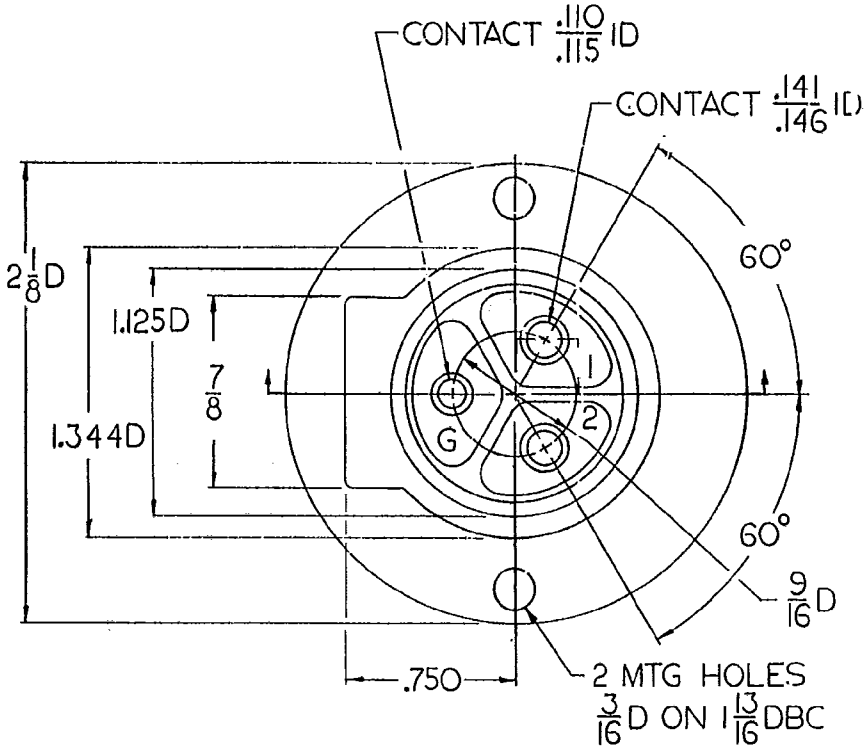

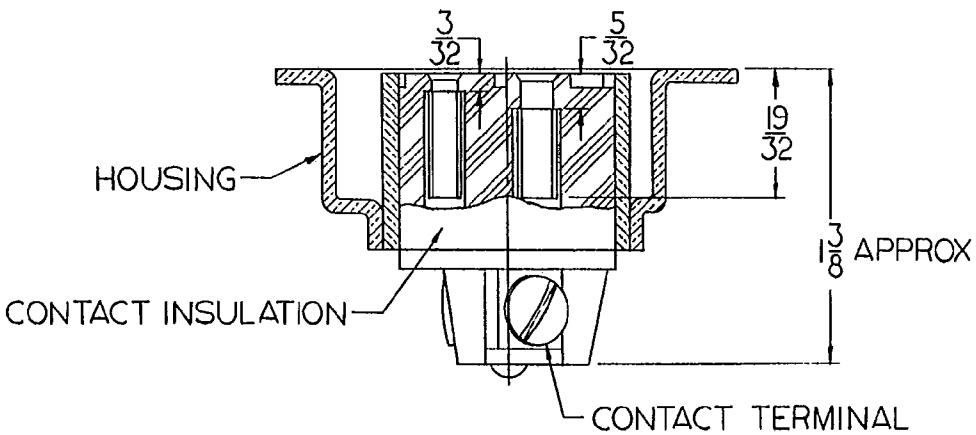

SH 9140

NOTE:

1. Dimensions are in inches. Unless otherwise specified, tolerances are ± 1/64 inch for fractions and ± 0.005 inch for decimals. Angular tolerance is ± 1/2 degree.

FIGURE 1. Dimensions and configuration.

REQUIREMENTS:

1. Dimensions and configuration: See figure 1.
2. Effectiveness of enclosure: Watertight in accordance with MIL-STD-108, when mounted in a suitable enclosure.
3. Material: Housing - optional - polyamide (nylon) or metal. Contact insulation - in accordance with type MAI-60 of MIL-M-14.
4. Contact hardness: Minimum of Rockwell 80F.
5. Mating plug: MIL-R-2726/54, part number M2726/54-001.
6. Design: Plastic housing and insulation may be a one-piece molded unit.
7. Part number: M2726/59-001.
8. Electrical rating: 10-ampere, 450-volt, alternating current, 400-hertz.

QUALITY ASSURANCE:

Quality assurance shall be as specified in MIL-R-2726 and table I herein. The first article and quality conformance inspections shall consist of the inspections as specified in table I, in the order shown.

TABLE I. First article and quality conformance inspection.

Inspection	Requirement	Test method	First article	Quality conformance
Examination	3.1, 3.3, 3.4, 3.5, 3.6 and 3.7	4.6.1	X	X
Insulation resistance	3.5.1	4.7.1	X	X
Dielectric withstanding voltage	3.5.2	4.7.2	X	X
Contact resistance	3.5.3.1	4.7.3.1	X	X
Endurance	3.5.5	4.7.5	X	
Salt spray	3.5.11	4.7.11	X	
Contact resistance	3.5.3.1	4.7.3.1	X	
Current load	3.5.12	4.7.12	X	
Vibration	3.5.9	4.7.9	X	
Shock	3.5.10	4.7.10	X	
Effectiveness of enclosure	3.5.4	4.7.4	X	X
Dielectric withstanding voltage	3.5.2	4.7.2	X	
Rockwell hardness	3.5.14	4.7.14	X	

Preparing activity:
Navy - SH
(Project 5935-N255-60)