MILITARY SPECIFICATION

RELAYS, REED, DRY, GENERAL SPECIFICATION FOR

This specification is approved for use by the Department of the Air Force, and is available for use by all Departments and Agencies of the Department of Defense.

1. SCOPE

1.1 Scope. This specification establishes the general requirements for dry reed relays. (See 6.1.)

2. APPLICABLE DOCUMENTS

2.1 Government specifications and standards. Unless otherwise specified, the following specifications and standards, of the issue listed in that issue of the Department of Defense Index of Specifications and Standards specified in the solicitation, form a part of this specification to the extent specified herein.

SPECIFICATIONS

FEDERAL

J-W-1177	-	Wire, Magnet, Electrical.
ZZ-R-765	-	Rubber, Silicone.
PPP-B-566	-	Boxes, Folding, Paperboard.
PPP-B-585	-	Boxes, Wood, Wirebound.
PPP-B-601	-	Boxes, Wood, Cleated-Plywood.
PPP-B-621	-	Boxes, Wood, Nailed and Lock-Corner.
PPP-B-636	-	Boxes, Shipping, Fiberboard.
PPP-B-676	-	Boxes, Setup.

MILITARY

MIL-I-10	-	Insulating Compound, Electrical, Ceramic, Class L.
MIL-M-14	-	Molding Plastics and Molded Plastic Parts, Thermosetting.
MIL-C-17	-	Cables, Radio Frequency, Flexible and Semirigid, General Specification for.
MIL-P-116	-	Preservation, Methods of.
MIL-P-997	-	Plastic Material, Laminated, Thermosetting, Electrical Insulation: Sheets, Glass Cloth, Silicone Resin.
MIL-P-15037	-	Plastic Sheet, Laminated, Thermosetting, Glass-Cloth, Melamine-Resin.
MIL-P-15047	-	Plastic Sheets, Laminated Thermosetting, Nylon Fabric Base, Phenolic-Resin.
MIL-R-83516/1	-	Relays, Reed, Dry, Dual In-Line Package (DIP), General Purpose.
MIL-R-83516/2	-	Relays, Reed, Dry, Dual In-Line Package (DIP), Latching.
MIL-R-83516/3	-	Relays, Reed, Dry, Single In-Line Package (SIP), General Purpose.
MIL-R-83516/4	-	Relays, Reed, Dry, Dual In-Line Package (DIP), General Purpose, Low-Power Coil.
MIL-R-83516/5	-	Relays, Reed, Dry, Single In-Line Package (SIP), General Purpose, Low-Power Coil.

Beneficial comments (recommendations, additions, deletions) and any pertinent data which may be of use in improving this document should be addressed to: Electronic Support Directorate, AFLC (AFALD/PTS), Gentile Air Force Station, Dayton, OH 45444, by using the self-addressed Standardization Document Improvement Proposal (DD Form 1426) appearing at the end of this document or by letter.

STANDARDS

MILITARY

MIL-STD-129	-	Marking for Shipment and Storage.
MIL-STD-202	-	Test Methods for Electronic and Electrical Component Parts.
MIL-STD-454	-	Standard General Requirements for Electronic Equipment.
MIL-STD-794	-	Parts and Equipment, Procedures for Packaging of.
MIL-STD-883	-	Test Methods and Procedures for Microelectronics.
MIL-STD-1285	-	Marking of Electrical and Electronic Parts.
MIL-STD-45662	-	Calibration Systems Requirements.

(Copies of specifications, standards, handbooks, drawings, and publications required by manufacturers in connection with specific acquisition functions should be obtained from the contracting activity or as directed by the contracting officer.)

2.2 Order of precedence. In the event of a conflict between the text of this specification and the references other than specification sheets cited herein, the text of this specification shall take precedence.

3. REQUIREMENTS

3.1 Specification sheets. The individual item requirements shall be as specified herein and in accordance with the applicable specification sheet. In the event of any conflict between the requirements of this specification and the specification sheet, the latter shall govern (see 6.2).

3.2 Qualification. Relays furnished under this specification shall be products which are qualified for listing on the applicable qualified products list at the time set for opening of bids (see 4.4 and 6.3).

3.3 Materials. Materials shall be as specified herein. However, when a definite material is not specified, a material shall be used which will enable the relays to meet the performance requirements of this specification. Acceptance or approval of any constituent material shall not be construed as a guaranty of the acceptance of the finished product.

3.3.1 Plastic. Laminated plastic material shall conform to MIL-P-997, MIL-P-15037, or MIL-P-15047. Molded plastic material shall conform to MIL-M-14. Cotton-filled or wood-flour-filled materials shall not be used.

3.3.2 Ceramic. Ceramic insulating material shall conform to MIL-I-10, grade L422 or higher. Ceramic used for external surfaces shall be glazed.

3.3.3 Metals. Metals shall be of a corrosion-resistant type or shall be plated or treated to resist corrosion.

3.3.4 Magnet wire. Magnet wire shall conform to J-W-1177.

3.3.5 Rubber. Rubber shall conform to ZZ-R-765.

3.3.6 Fungus-resistant. Materials used in the construction of relays shall be fungus inert (see requirement 4 of MIL-STD-454).

3.4 Design and construction. Relays shall be of the design, construction, and physical dimensions specified (see 3.1).

3.4.1 Enclosures. Unless otherwise specified (see 3.1), relays shall be provided with a molded package to surround the coil and reed capsule and, when applicable (see 3.1), the diodes and electrostatic shielding.

3.4.2 Contacts. Contacts shall be glass enclosed, shall have the load ratings and arrangements as specified (see 3.1), and shall be capable of carrying the maximum rated current continuously.

3.4.3 Coils. Coils shall be adequately insulated electrically from the enclosure and the contacts, and shall be designed for continuous operation at rated voltage. The resistance and rated voltage shall be as specified (see 3.1).

3.4.4 Terminal identification. The terminals shall be identified as specified (see 3.1).

3.4.5 Circuit diagram. The circuit diagram shall be as specified (see 3.1).

3.4.6 Operating temperature range. The operating temperature range shall be as specified (see 3.1).

3.5 Thermal shock. When tested as specified in 4.6.2, relays shall meet the following requirements at each operating temperature extreme:

Insulation resistance - - - -	Shall be as specified in 3.10. At high operating temperature, the insulation resistance between coil and enclosure shall be not less than 500 megohms.
Pickup and dropout voltages (as applicable, see 3.1)- - -	Shall be as specified in 3.13.
Operate and release times (as applicable, see 3.1)- - -	Shall be as specified in 3.16.
Visual examination- - - - - -	There shall be no evidence of cracking, peeling, or flaking of the finish.

3.6 Run in. When relays are tested as specified in 4.6.3, the contact resistance shall not exceed 0.120 ohm (120 milliohms).

3.7 Contact stability. When relays are tested as specified in 4.6.4, the difference between static contact resistance measurements shall not exceed 0.005 ohm (5 milliohms).

3.8 Solderability (applicable to relays with solder terminals). When relays are tested as specified in 4.6.5, the dipped surface of solid wire-lead and pin terminals shall be at least 95 percent covered with a continuous new solder coating. The remaining 5 percent may contain only small pinholes or rough spots; these shall not be concentrated in one area. Bare base metal where the solder dip failed to cover the original coating is an indication of poor solderability, and shall be cause for failure. For solder-lug terminals greater than 0.045 inch in diameter, 95 percent of the total length of fillet, which is between the standard wrap wire and the terminal, shall be tangent to the surface of the terminal being tested, and shall be free of pinholes, voids, etc. A ragged or interrupted line at the point of tangency between the fillet and the terminal under test shall be considered a failure.

3.9 Dielectric withstanding voltage. When tested as specified in 4.6.6, relays shall withstand the specified voltage (see 3.1) without damage. The leakage current shall not exceed 1 milliampere (mA) and there shall be no evidence of damage due to arcing (air discharge), flashover (surface discharge), or insulation breakdown (puncture discharge).

3.10 Insulation resistance. When relays are tested as specified in 4.6.7, the insulation resistance shall be not less than 10,000 megohms unless otherwise specified (see 3.1).

3.11 DC coil resistance. When relays are tested as specified in 4.6.8, the dc coil resistance shall be as specified (see 3.1).

3.12 Coil transient suppression (applicable to relays with internal diodes). When relays are tested as specified in 4.6.9, the transient negative voltage shall not exceed the value specified (see 3.1).

3.13 Pickup and dropout voltages (as applicable, see 3.1). When relays are tested as specified in 4.6.10, the pickup and dropout voltages (as applicable) shall be as specified (see 3.1). (NOTE: Dropout voltage is not applicable to latching relays.)

3.14 Coil power dissipation (when specified, see 3.1). When relays are tested as specified in 4.6.11, the power dissipated shall be as specified (see 3.1).

3.15 Static contact resistance. When relays are tested as specified in 4.6.12, the static contact resistance (or voltage drop) of any pair of mated contacts shall not exceed 0.130 ohm before life, 1.0 ohm during life, and 1.0 ohm after life. For group A inspection, static contact resistance shall not exceed 0.200 ohm.

3.16 Operate and release times (as applicable see 3.1). When relays are tested as specified in 4.6.13, the operate and release times (as applicable) (including bounce) shall be as specified (see 3.1). (NOTE: Release time is not applicable to latching relays.)

3.17 Resistance to solvents. When relays are tested as specified in 4.6.14, the marking shall remain legible.

3.18 Contact noise (when specified, see 3.1). When relays are tested as specified in 4.6.15, the peak-to-peak ratings for the bandwidth (dc to 10 kilohertz (kHz)) shall be 400 microvolts (μV) at closure; 200 μV at 1.5 milliseconds (ms); 125 μV at 2 ms; 60 μV at 2.5 ms; 35 μV at 3 ms; 15 μV at 4 ms; and 10 μV at 5 ms.

3.19 Thermal EMF (when specified, see 3.1). When relays are tested as specified in 4.6.16, the thermal EMF shall be as specified (see 3.1).

3.20 Capacitance (when specified, see 3.1). When relays are tested as specified in 4.6.17, the capacitance shall be as specified (see 3.1).

3.21 Shock (specified pulse). When relays are tested as specified in 4.6.18, there shall be no evidence of mechanical or electrical damage.

3.22 Vibration, high frequency. When relays are tested as specified in 4.6.19, there shall be no evidence of breaking, cracking, chipping, or flaking of the finish, and no loosening of the terminals.

3.23 Moisture resistance. When relays are tested as specified in 4.6.20, there shall be no evidence of breaking, cracking, chipping, or flaking of the finish, and no loosening of the terminals. Immediately after step 6 of the final cycle, the insulation resistance shall be not less than 100 megohms. After the 24-hour drying period, the dielectric withstanding voltage; insulation resistance; static contact resistance; and pickup and dropout voltages (as applicable, see 3.1) shall be as specified in 3.9, 3.10, 3.15, and 3.13, respectively.

3.24 Contact sticking. When relays are tested as specified in 4.6.21, the release time (or operate time for latching relays) shall not exceed 1.0 ms (1.5 ms for form C contacts).

3.25 Resistance to soldering heat. When relays are tested as specified in 4.6.22, the insulation resistance; static contact resistance; pickup and dropout voltages (as applicable, see 3.1); and dc coil resistance shall be as specified in 3.10, 3.15, 3.13, and 3.11, respectively.

3.26 Salt spray (corrosion). When relays are tested as specified in 4.6.23, there shall be no evidence of breaking, cracking, chipping, or flaking of the finish, and no exposure of the base metal due to corrosion which would adversely affect the application or performance characteristics of the relay.

3.27 Lead integrity. When relays are tested as specified in 4.6.24, there shall be no evidence of loosening or breaking of the terminals or other damage that could adversely affect the normal operation of the relay. Bending of printed circuit terminals shall not be construed as damage provided they can be satisfactorily reformed to their original configuration.

3.28 Cross talk (applicable to relays with electrostatic shielding). When relays are tested as specified in 4.6.25, the attenuation shall be not less than -20 decibels.

3.29 Life. When tested as specified in 4.6.26, relays shall remain electrically operative and no mechanical damage shall exist. During and following this test, relays shall meet the following requirements:

DC coil resistance- - - - - - - -	Shall be as specified in 3.11.
Static contact resistance - - - -	Shall be as specified in 3.15.
Pickup and dropout voltages (as applicable, see 3.1)- - - -	Shall be as specified in 3.13.
Operate and release times (as applicable, see 3.1)- - - -	Shall be as specified in 3.16.
Dielectric withstanding voltage -	Shall be as specified in 3.9.
Insulation resistance - - - - - -	Shall be as specified in 3.10.

3.30 Marking. Relays shall be marked in accordance with method I of MIL-STD-1285 with the following information:

a. Military part number (see 3.1).

b. Rated coil voltage (see 3.1).

c. Source and date codes.

d. Manufacturer's part number.

3.31 Workmanship. Relays shall be so fabricated as to be uniform in quality, and shall be free from cracks, displaced parts, sharp edges, burrs, and other defects that will affect life, serviceability, and appearance.

4. QUALITY ASSURANCE PROVISIONS

4.1 Responsibility for inspection. Unless otherwise specified in the contract or purchase order, the contractor is responsible for the performance of all inspection requirements as specified herein. Except as otherwise specified in the contract or purchase order, the contractor may use his own or any other facilities suitable for the performance of the inspection requirements specified herein, unless disapproved by the Government. The Government reserves the right to perform any of the inspections set forth in the specification where such inspections are deemed necessary to assure supplies and services conform to prescribed requirements.

4.1.1 Test equipment and inspection facilities. Test and measuring equipment and inspection facilities of sufficient accuracy, quality, and quantity to permit performance of the required inspection shall be established and maintained by the contractor. The establishment and maintenance of a calibration system to control the accuracy of the measuring and test equipment shall be in accordance with MIL-STD-45662.

4.2 Classification of inspections. The inspections specified herein are classified as follows:

a. Qualification inspection (see 4.4).

b. Quality conformance inspection (see 4.5).

4.3 Inspection conditions. Unless otherwise specified herein, all inspections shall be performed in accordance with the test conditions specified in the "GENERAL REQUIREMENTS" of MIL-STD-202.

4.4 Qualification inspection. Qualification inspection shall be performed at a laboratory acceptable to the Government (see 6.3) on sample relays produced with equipment and procedures normally used in production.

4.4.1 Sample size. The number of relays to be subjected to qualification inspection shall be as specified in table I. The sample shall be selected from a production run and shall be produced with equipment and procedures normally used in production. The qualification sample shall be as defined in table I.

4.4.2 Inspection routine. Sample units shall be subjected to the qualification inspection specified in table I, except that groups II through IV may be conducted concurrently. Except for the solderability test, all sample units shall be subjected to the inspections of group I. The sample shall then be divided into three groups and subjected to the inspections specified for their particular group.

TABLE I. Qualification inspection. 1/

Inspection 2/	Requirement paragraph	Test method paragraph	Number of sample relays to be inspected	Number of defectives permitted
Group I				
Visual and mechanical examination (internal)	3.1, 3.3, 3.4, and 3.31	4.6.1.1	1 open sample unit	
Visual and mechanical examination (external)	3.1, 3.3, 3.4, 3.30, and 3.31	4.6.1.2	All relays in sample 3/	1
Thermal shock	3.5	4.6.2		
Run in	3.6	4.6.3		
Contact stability	3.7	4.6.4		
Solderability (applicable to relays with solder terminals)	3.8	4.6.5	2 1/	
Dielectric withstanding voltage	3.9	4.6.6	All relays in sample 3/	
Insulation resistance	3.10	4.6.7		
DC coil resistance	3.11	4.6.8		
Coil transient suppression (applicable to relays with internal diodes)	3.12	4.6.9		
Pickup and dropout voltages (as applicable, see 3.1)	3.13	4.6.10		
Coil power dissipation (when specified, see 3.1)	3.14	4.6.11		
Static contact resistance	3.15	4.6.12		
Operate and release times (as applicable, see 3.1)	3.16	4.6.13		
Group II				
Resistance to solvents	3.17	4.6.14	4	0
Contact noise (when specified, see 3.1)	3.18	4.6.15		
Thermal EMF (when specified, see 3.1)	3.19	4.6.16		
Capacitance (when specified, see 3.1)	3.20	4.6.17		
Shock (specified pulse)	3.21	4.6.18		
Vibration, high frequency	3.22	4.6.19		
Moisture resistance	3.23	4.6.20		
Visual and mechanical examination (external)	3.1, 3.3, 3.4, 3.30, and 3.31	4.6.1.2		
Group III				
Contact sticking	3.24	4.6.21	4	
Resistance to soldering heat	3.25	4.6.22		
Salt spray (corrosion)	3.26	4.6.23		
Lead integrity	3.27	4.6.24		
DC coil resistance	3.11	4.6.8		
Static contact resistance	3.15	4.6.12		
Pickup and dropout voltages (as applicable, see 3.1)	3.13	4.6.10		
Operate and release times (as applicable, see 3.1)	3.16	4.6.13		
Dielectric withstanding voltage	3.9	4.6.6		
Insulation resistance	3.10	4.6.7		
Group IV				
Cross talk (applicable to relays with electrostatic shielding)	3.28	4.6.25	4	
Life	3.29	4.6.26		
DC coil resistance	3.11	4.6.8		
Static contact resistance	3.15	4.6.12		
Pickup and dropout voltages (as applicable, see 3.1)	3.13	4.6.10		
Operate and release times (as applicable, see 3.1)	3.16	4.6.13		
Dielectric withstanding voltage	3.9	4.6.6		
Insulation resistance	3.10	4.6.7		

1/ Select the specified number of relays at random from the 13 sample units.
2/ A test procedure (e.g., dielectric withstanding voltage) required at the conclusion of a procedure shall be known as a post test of that procedure. Some post tests are required to be repeated on sample units as post tests for more than one test procedure. At the option of the manufacturer, such post testing shall be required only at the conclusion of the life test.
3/ One additional sample unit is included in each sample of 13 sample units to permit substitution for the failure allowed in group I.

4.4.3 Failures. Failures in excess of those allowed in table I shall be cause for refusal to grant qualification approval.

4.4.4 Retention of qualification. To retain qualification, the contractor shall forward a report at 12-month intervals to the qualifying activity. The qualifying activity shall establish the initial reporting date. The report shall consist of:

a. A summary of the results of the tests performed for inspection of product for delivery (group A), indicating as a minimum the number of lots that have passed and the number that have failed. The results of tests of all reworked lots shall be identified and accounted for.

b. A summary of the results of tests performed for periodic inspection (group B), including the number and mode of failures. The summary shall include results of all periodic inspection tests performed and completed during the 36-month period. If the test results indicate nonconformance with specification requirements, and corrective action acceptable to the qualifying activity has not been taken, action may be taken to remove the failing product from the qualified products list.

Failure to submit the report within 30 days after the end of each 12-month period may result in loss of qualification for the product. In addition to the periodic submission of inspection data, the contractor shall immediately notify the qualifying activity at any time during the 12-month period that the inspection data indicates failure of the qualified product to meet the requirements of this specification.

In the event that no production occurred during the reporting period, a report shall be submitted certifying that the company still has the capabilities and facilities necessary to produce the relay. If during two consecutive reporting periods there has been no production, the manufacturer may be required, at the discretion of the qualifying activity, to submit a representative relay of each specification sheet for testing in accordance with the qualification inspection requirements.

4.5 Quality conformance inspection.

4.5.1 Inspection of product for delivery. Inspection of product for delivery shall consist of group A inspection.

4.5.1.1 Inspection lot. An inspection lot, as far as practicable, shall consist of all relays covered by a single specification sheet produced under essentially the same conditions within a period not to exceed 4 weeks and offered for inspection at one time.

4.5.1.2 Group A inspection. Group A inspection shall consist of the inspections specified in table II.

4.5.1.2.1 Sampling plan. Subgroups 1 and 2 tests shall be performed on each relay offered for inspection.

4.5.1.2.2 Rejected lots.

4.5.1.2.2.1 Subgroup 1. If over 10 percent of an inspection lot fails, the relays contained in that lot shall be rejected and shall not be resubmitted for inspection. Relays which have failed to pass subgroup 1 tests to which they have been subjected, shall be removed from the lot and discarded.

4.5.1.2.2.2 Subgroup 2. If an inspection lot is rejected, the manufacturer may rework it to correct the defects, or screen out the defective units and resubmit for reinspection. Resubmitted lots shall be inspected using tightened inspection and shall not thereafter be tendered for acceptance unless the former rejection or requirement of correction is disclosed. Such lots shall be separate from new lots and shall be clearly identified as reinspected lots.

4.5.1.2.3 Disposition of sample units. Sample relays which have passed all the group A inspection may be delivered on the contract or purchase order, if the lot is accepted and the sample relays are still within the specified electrical tolerances.

TABLE II. Group A inspection.

Inspection 1/	Requirement paragraph	Test method paragraph	Quality level (percent defective)
Subgroup 1			
Thermal shock- - - - - - - - - - -	3.5	4.6.2	100% inspection (discard all failed relays)
Run in - - - - - - - - - - - - - - -	3.6	4.6.3	
Contact stability- - - - - - - - -	3.7	4.6.4	
Dielectric withstanding voltage-	3.9	4.6.6	
Insulation resistance- - - - - -	3.10	4.6.7	
DC coil resistance - - - - - - -	3.11	4.6.8	
Coil transient suppression (applicable to relays with internal diodes) - - - - - - -	3.12	4.6.9	
Pickup and dropout voltages (as applicable, see 3.1) - - -	3.13	4.6.10	
Coil power dissipation (when specified, see 3.1)- - - - - -	3.14	4.6.11	
Static contact resistance- - - -	3.15	4.6.12	
Operate and release times (as applicable, see 3.1) - - -	3.16	4.6.13	
Subgroup 2			
Visual and mechanical examination (external) 2/ - -	3.1, 3.3, 3.4, 3.30, and 3.31	4.6.1.2	100% inspection

1/ The order of performing the inspections shall be as listed except the order of performing the electrical characteristics tests is optional.
2/ Physical dimensions shall be checked on only two relays selected at random from each lot.

4.5.2 Periodic inspection. Periodic inspection shall consist of group B. Except where the results of these inspections show noncompliance with the applicable requirements (see 4.5.2.2), delivery of products which have passed group A inspection shall not be delayed pending the results of these periodic inspections.

4.5.2.1 Group B inspection. Group B inspection shall consist of the inspections specified in table I. Group B inspection shall be made on sample units selected from inspection lots which have passed the group A inspection.

4.5.2.1.1 Sampling plan. Every 36 months, 13 sample units shall be subjected to the inspections of table I. The number of failures allowed shall be as specified in table I.

4.5.2.1.2 Failures. If the number of failures exceed the number allowed in table I, the sample shall be considered to have failed.

4.5.2.1.3 Disposition of sample units. Sample units which have been subjected to group B inspection shall not be delivered on the contract or purchase order.

4.5.2.2 Noncompliance. If a sample fails to pass group B inspection, the manufacturer shall notify the qualifying activity and the cognizant inspection activity of such failure and take corrective action on the materials or processes, or both, as warranted, and on all units of product which can be corrected and which were manufactured under essentially the same conditions, with essentially the same materials and processes, and which are considered subject to the same failure. Acceptance and shipment of the product shall be discontinued until corrective action acceptable to the qualifying activity has been taken. After the corrective action has been taken, group B inspection shall be repeated on additional sample units (all inspection, or the inspection which the original sample failed, at the option of the qualifying activity). Group A inspection may be reinstituted; however, final acceptance and shipment shall be withheld until the group B inspection has shown that the corrective action was successful. In the event of failure after reinspection, information concerning the failure shall be furnished to the cognizant inspection activity and the qualifying activity.

4.5.3 Inspection of packaging. The sampling and inspection of the preservation and interior package marking shall be in accordance with groups A and B quality conformance inspection requirements of MIL-P-116. The sampling and inspection of the packing and marking for shipment and storage shall be in accordance with the quality assurance provisions of the applicable container specification and the marking requirements of MIL-STD-129.

4.6 Methods of inspection. When applicable, testing of relays with plug-in terminations shall be performed with the appropriate connector mated to the relay. When it is necessary to monitor contact operation during the specified testing, the contact monitor used shall not load the respective contact in excess of 1/10 watt. A NE-2 neon lamp in series with a 100,000-ohm resistor, represents a suitable contact monitoring device.

4.6.1 Visual and mechanical examination.

4.6.1.1 Internal. Relays shall be examined to verify that the internal design and construction, physical dimensions, materials, and workmanship are in accordance with the applicable requirements (see 3.1, 3.3, 3.4, and 3.31).

4.6.1.2 External. Relays shall be examined to verify that the external design and construction, physical dimensions, materials, marking, and workmanship are in accordance with the applicable requirements (see 3.1, 3.3, 3.4, 3.30, and 3.31).

4.6.2 Thermal shock (see 3.5). Relays shall be tested in accordance with method 107 of MIL-STD-202. The following details and exceptions shall apply:

a. Special mounting - Relays shall be suspended in the test chamber by twine, or other nonheat-conducting material, in a plane parallel to the normal airflow. Test leads may be used for mounting, however, they shall not provide a heat sink.

b. Test condition - B, except the high temperature shall be +105°C, and exposure time at temperature extreme during the fifth cycle shall be for 2 hours each (see 3.1).

c. Measurements at each operating temperature extreme - During steps 1 and 3 of the fifth cycle at the end of each temperature exposure, and with the relays still in the conditioning chamber, the insulation resistance, pickup and dropout voltages (as applicable, see 3.1), and operate and release times (as applicable, see 3.1) shall be measured as specified in 4.6.7, 4.6.10, and 4.6.13, respectively.

d. Examination after test - Relays shall be visually examined for evidence of cracking, peeling, and flaking of the finish.

4.6.3 Run-in (see 3.6). Relays shall be preconditioned prior to run-in by performing a dry buzz of contacts for a minimum of 5 million operations under no load conditions. Contacts shall not be monitored during dry buzz. Following dry buzz, run-in shall be performed for a minimum of 1 million operations with the following loads:

a. The coil shall be energized at rated voltage.

b. Test load for qualification inspection, 5 V dc at 10 mA; test load for group A inspection, 0.05 V dc at 10 mA.

During run-in, each pair of mated contacts shall be monitored for contact resistance as specified in 4.6.3.1 or 4.6.3.2.

4.6.3.1 Noncontinuously monitored test. Contact resistance shall be measured as a voltage drop across the relay while the contacts are held closed and while test load current is being carried by the contacts. An oscilloscope shall be used to monitor opening and closing of the contacts under static load conditions to determine welding or sticking of the contacts. The number of operations at which the above characteristics are monitored shall be 18,000, 36,000, 54,000, 72,000, 90,000, 1×10^6, 5×10^6, and every 5×10^6 thereafter until end of test. Contact resistance shall be measured as specified in 4.6.12.

4.6.3.2 Continuous miss detection test. Relays shall be monitored for stick fault failures each time the contacts open or close. If the contacts fail to open in 1 ms (1.5 ms for form C contacts) after the coil drive is removed, a stick fault shall be detected and indicated. The contact resistance level shall be monitored for a period of 50 percent of coil "on" time and if the contact resistance exceeds the values specified in 3.15, a contact resistance miss will be detected and indicated.

4.6.4 Contact stability (see 3.7). The coil shall be energized and deenergized for 10 consecutive operations. After each operation, contact resistance shall be measured and the maximum difference between the 10 measured values of contact resistance shall not exceed 0.005 ohm.

4.6.5 Solderability (applicable to relays with solder terminals) (see 3.8). Relays shall be tested in accordance with method 208 of MIL-STD-202. The following details and exception shall apply:

a. Number of terminations of each part to be tested - All.

b. Depth of immersion in flux and solder - Leads shall be immersed to within 0.0625 inch (1.59 mm) of the molded package.

c. Temperature of molten solder - Shall be a uniform 260°C ±5°C (500°F ±9°F).

4.6.6 Dielectric withstanding voltage (see 3.9). Relays shall be tested in accordance with method 301 of MIL-STD-202. The following details shall apply:

a. Points of application and magnitude of test voltage - Shall be as specified (see 3.1).

b. Maximum leakage current - 1.0 mA.

c. Duration of application of test voltage - 60 seconds for qualification inspection; 5 seconds for group A inspection.

d. Examinations following test - Relays shall be examined for evidence of arcing, flashover, insulation breakdown, and damage.

4.6.7 Insulation resistance (see 3.10). Relays shall be tested in accordance with method 302 of MIL-STD-202. The following details shall apply:

a. Test condition - A.

b. Points of measurement - Shall be as specified (see 3.1).

4.6.8 DC coil resistance (see 3.11). Relays shall be tested in accordance with method 303 of MIL-STD-202.

4.6.9 Coil transient suppression (applicable to relays with internal diodes) (see 3.12). Nominal rated voltage shall be applied to the coil. A cathode ray oscilloscope shall be used to monitor the voltage across the coil. The coil voltage shall be instantaneously removed and the monitor observed to verify the transient voltage generated.

4.6.10 Pickup and dropout voltages (as applicable, see 3.1) (see 3.13). Relays shall be tested as specified in 4.6.10.1 and 4.6.10.2, as applicable. The relay mounting position shall be as specified (see 3.1). A suitable indicating device shall be used to monitor contact operation.

4.6.10.1 Pickup voltage.

4.6.10.1.1 Latching relays. Before measuring the pickup (operate) voltage on dual coil relays, establish that all contacts are in their last energized mode. If not, apply rated voltage to establish the last energized contact position. Gradually increase the voltage to the latching coil until the contacts transfer and measure the operate voltage. Apply rated latching voltage and reduce to zero. Gradually increase the voltage to the reset coil (or in the reset direction for single coil relays) until the contacts transfer and measure the reset (operate) voltage.

4.6.10.1.2 All other relays. Rated voltage shall be applied to the coil for a period of 1 to 3 seconds. The voltage shall be gradually reduced to zero. The voltage shall then be gradually increased until the relay operates, and the pickup voltage shall be measured.

4.6.10.2 Dropout voltage (not applicable to latching relays). Rated voltage shall be applied to the coil. The voltage shall be gradually reduced until the contacts return to the deenergized position, and the dropout voltage shall be measured.

4.6.11 Coil power dissipation (when specified, see 3.1) (see 3.14). Relays shall have the coil energized with rated voltage (see 3.1) with the relay stabilized at 25°C ±5°C. The coil power shall be measured within the first minute.

4.6.12 Static contact resistance (see 3.15). Relays shall be tested in accordance with method 307 of MIL-STD-202. The following details and exceptions shall apply:

a. Method of connection - Between the measuring apparatus and the relay terminals. Voltage-sensing leads shall be connected in such a way as to exclude the resistance of the current-carrying leads.

b. Test loads - 5 V dc at 10 mA (maximum or peak ac) for qualification inspection; 0.05 V dc at 10 mA (maximum or peak ac) for group A inspection.

c. Points of measurements - All mated contacts in their closed position (the coil shall be energized with rated voltage if necessary to effect contact closure).

d. Number of activations prior to measurement - None.

e. Number of test actuations - Three for qualification inspection (the contact load shall not be applied during contact transfer). For quality conformance inspection, one test actuation shall be made.

f. Number of measurements per actuation - One in each closed contact position.

4.6.13 Operate and release times (as applicable, see 3.1) (see 3.16). The operate and release times (including bounce) shall be measured using an oscilloscope. Rated voltage shall be applied to the coil. The circuit shown on figure 1, or equivalent, shall be used. For qualification inspection, timing measurements shall be made on all contact sets. For quality conformance inspection, all open contacts may be wired in series, and all closed contacts may be wired in parallel.

4.6.14 Resistance to solvents (see 3.17). Relays shall be tested in accordance with method 215 of MIL-STD-202. The following details and exceptions shall apply:

a. Portion of the specimen to be brushed - All marking.

b. Number of speciments to be tested - A total of four; two shall be tested using the first solvent solution; and one specimen each shall be tested using the second and third solvent solutions.

c. Examination - Specimens shall be examined for legibility of marking.

4.6.15 Contact noise (when specified, see 3.1) (see 3.18). Contact noise shall be measured using the test circuit shown on figure 2. The mercury switch shall be pulsed at a rate not to exceed 5 Hz with "on" and "off" time approximately equal. The input filter bandwidth of the oscilloscope shall be set at 600 Hz to 100 kHz. An oscilloscope, such as Tektronix Inc. type 561A, with type 2A61 plug-in, or equal, shall be used, with its time scale adjusted to 2 ms per centimeter and its gain control adjusted for adequate deflection. The peak-to-peak voltage shall be determined at 10 ms. The oscilloscope trace shall be recorded using an oscilloscope record camera.

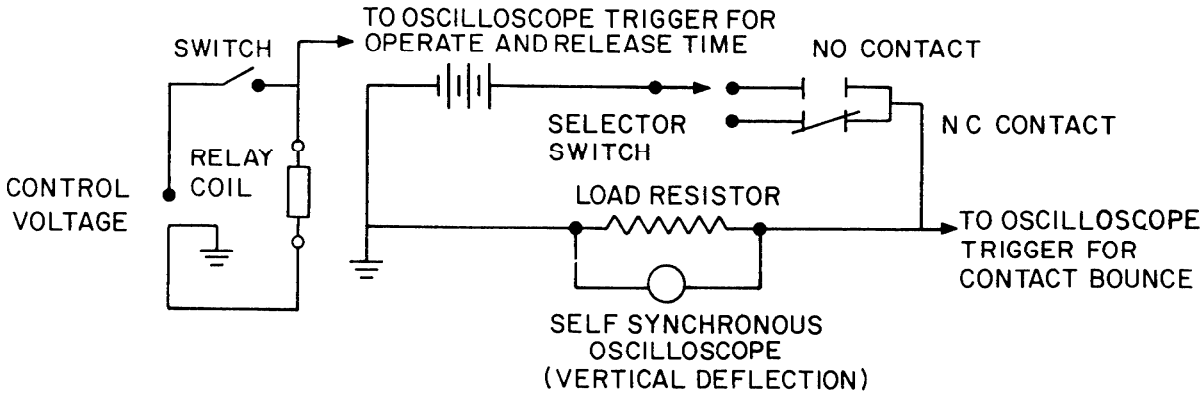

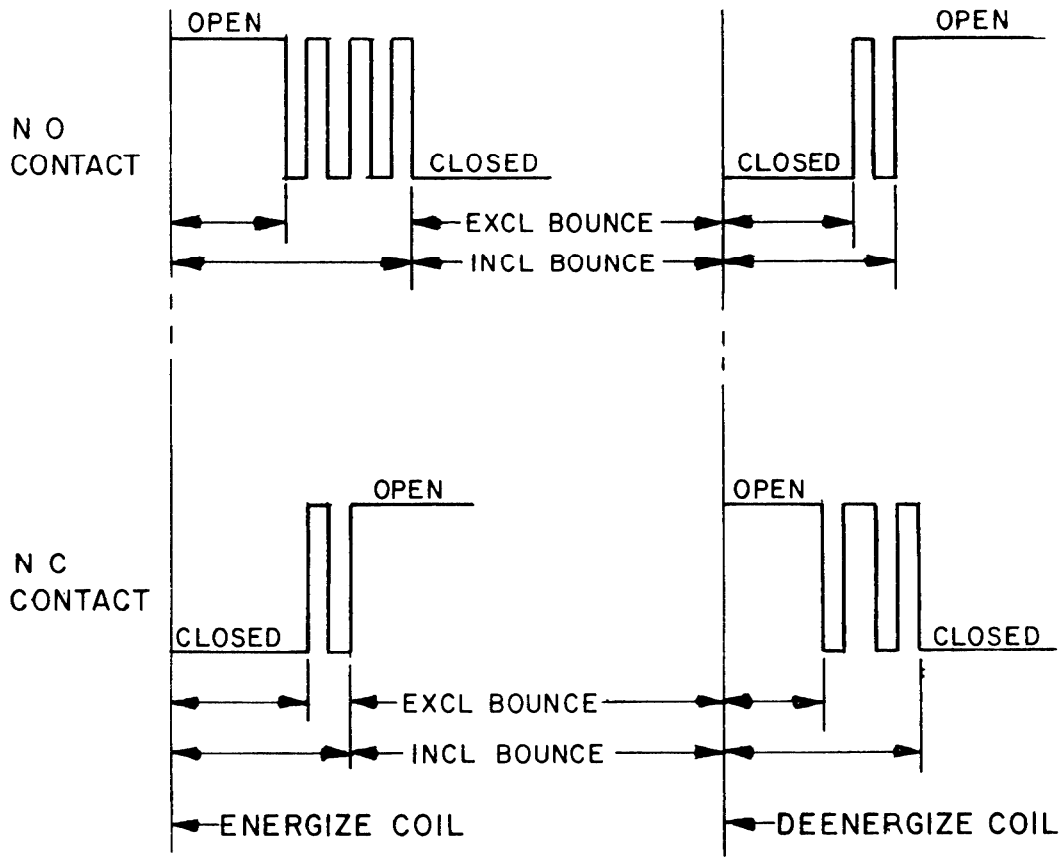

FIGURE 1. Typical circuit for operate and release time and contact bounce with typical traces.

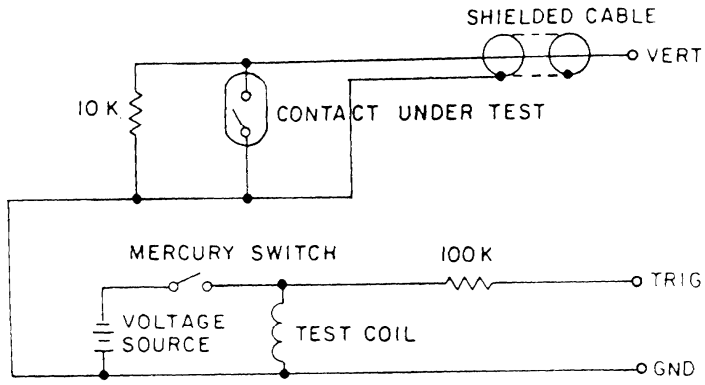

FIGURE 2. Procedure for observing contact noise on closing.

4.6.16 Thermal EMF (when specified, see 3.1) (see 3.19). Thermal EMF shall be measured on each contact which closes when the relay is energized and deenergized respectively. Rated voltage shall be used to energize the relay. Each thermal EMF measurement shall be made for approximately 30 minutes after the relay is energized or deenergized. When the relay incorporates more than one contact pole, as many as two closed contacts may be connected in series and measured at a given time. A suitable test circuit is shown on figure 3 for two contacts in series.

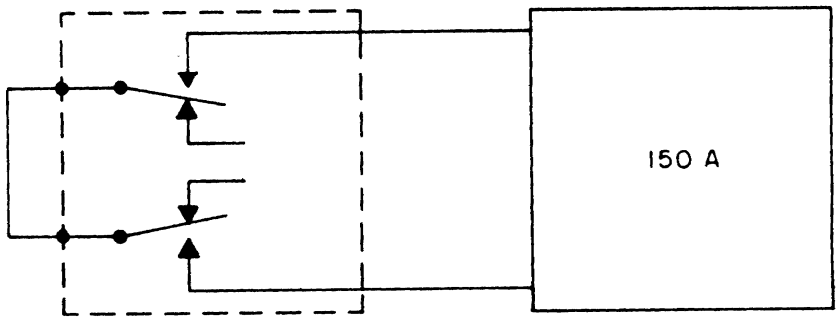

FIGURE 3. Thermal EMF test circuit.

4.6.17 Capacitance (when specified, see 3.1) (see 3.20). Relays shall be tested in accordance with method 305 of MIL-STD-202. The following details shall apply:

a. Test frequency - 1 kHz.

b. Points of measurement - Shall be as specified (see 3.1).

4.6.18 Shock (specified pulse) (see 3.21). Relays shall be tested in accordance with method 213 of MIL-STD-202. The following details and exceptions shall apply:

a. Mounting method - Rigidly mounted by normal mounting means. (Relays designed without mounting provisions shall be rigidly secured to a suitable nonmagnetic mounting plate by means of potting or adhesive applied between the top of the relay and the mounting plate.)

b. Test condition - A (50 g).

c. Electrical load conditions - The coil shall be deenergized and the contacts shall not be loaded or monitored for chatter and closure.

d. Measurements and examinations after shock - Dielectric withstanding voltage, static contact resistance, and pickup and dropout voltages (as applicable, see 3.1) shall be measured as specified in 4.6.6, 4.6.12, and 4.6.10, respectively. Relays shall then be examined for loosening of parts.

4.6.19 Vibration, high frequency (see 3.22). Relays shall be tested in accordance with method 204 of MIL-STD-202. The contacts shall not be loaded or monitored for chatter or closure during vibration. The following details shall apply:

a. Mounting - Shall be as specified in 4.6.18a.

b. Test condition - D, except amplitude shall not exceed 20 g and frequency range shall be 10 to 2,000 Hz.

c. Measurements - Shall be as specified in 4.6.18d.

4.6.20 Moisture resistance (see 3.23). Relays shall be tested in accordance with method 106 of MIL-STD-202. The following details and exceptions shall apply:

a. Mounting - On a corrosion-resistant panel by normal mounting means.

b. Initial measurements - Not applicable.

c. Loading voltage - Not applicable.

d. Final measurements - Upon completion of step 6 of the final cycle, insulation resistance shall be measured as specified in 4.6.7. After a 24-hour drying period at a relative humidity of 50 ±5 percent, dielectric withstanding voltage shall be measured as specified in 4.6.6, except the test voltage shall be 90 percent of the initial potential. The insulation resistance, static contact resistance, and pickup and dropout voltages (as applicable, see 3.1) shall be measured as specified in 4.6.7, 4.6.12, and 4.6.10, respectively.

e. Examination after test - Relays shall be examined for evidence of breaking, cracking, chipping or flaking of the finish, and loosening of the terminals.

4.6.21 Contact sticking (see 3.24). Relays shall be energized for 24 hours at maximum operating temperature with 120 percent of rated voltage applied to the coil. No load shall be applied to the contacts. At the end of this period, without physically disturbing the relay, the coil shall be deenergized and the release time (or operate time for latching relays) shall be measured as specified in 4.6.13.

4.6.22 Resistance to soldering heat (see 3.25). Relays shall be tested in accordance with method 210 of MIL-STD-202. The following details and exceptions shall apply:

a. Depth of immersion in molten solder - Within 0.060 ±0.020 inch (1.52 ±0.51 mm) of the relay base.

b. Test condition - C.

c. Measurements after test - Insulation resistance, static contact resistance, pickup and dropout voltages (as applicable, see 3.1), and dc coil resistance shall be measured as specified in 4.6.7, 4.6.12, 4.6.10, and 4.6.8, respectively.

4.6.23 Salt spray (corrosion) (see 3.26). Relays shall be tested in accordance with method 101 of MIL-STD-202. The following details and exceptions shall apply:

a. Test condition - B

b. Examination after test - Relays shall be examined for evidence of peeling, chipping, flaking of the finish, and exposure of base material due to corrosion.

4.6.24 Lead integrity (see 3.27). Relays shall be tested in accordance with method 2004 of MIL-STD-883, test condition B2. The following details shall apply:

a. Test condition - B2.

b. Force to be applied - Shall be as specified (see 3.1).

c. Number of terminals per relay to be tested - Two.

4.6.25 Cross talk (applicable to relays with electrostatic shielding) (see 3.28). Cross talk shall be measured using equipment which shall have an input impedance of 1 megohm, minimum, shall be paralleled with a capacitance of 20 picofarads maximum. A 1.0 to 10.0 volt peak-to-peak input signal at frequencies up to 10 MHz shall be applied to the switching circuit through coaxial cable, terminated in 50 ohms ±5 percent at the device terminal. The coaxial cable shall conform to MIL-C-17. The input signal amplitude shall be measured at the input connection of the switch. The cross-talk signal shall be connected through a similar type coaxial cable, terminated in 50 ohms ±5 percent at the measuring device. The resultant attenuation in decibels equals:

20 (Log (to the base 10) of E_{in} divided by E_{out})

4.6.26 Life (see 3.29). Relays shall be tested for a minimum of 50 million operations. The following details shall apply:

a. Test temperature - Room temperature.

b. Energizing voltage - Rated voltage (see 3.1) shall be used to energize the coil.

c. Cycling rate - The cycling rate shall be not less than 60 Hz or more than 120 Hz. "On" and "off" periods shall be approximately equal.

d. Contact monitoring - The contacts shall not be monitored during the actual life cycling.

e. Test load - 5 V dc at 10 mA.

f. Periodic measurements - Upon completion of approximately 5 million operations, the life cycling shall be stopped and the electric power removed from the relays for approximately 1 hour. The dc coil resistance, static contact resistance, pickup and dropout voltages (as applicable, see 3.1), and operate and release times (as applicable, see 3.1) shall be measured as specified in 4.6.8, 4.6.12, 4.6.10, and 4.6.13, respectively. In addition, dielectric withstanding voltage and insulation resistance shall be measured as specified in 4.6.6 and 4.6.7, at the end of the life cycling (50 million operations). Relays shall then be externally examined to verify that no physical damage exists.

5. PACKAGING

5.1 Preservation. Preservation shall be level A or C as specified (see 6.2).

5.1.1 Level A.

5.1.1.1 Cleaning. Relays shall be cleaned in accordance with MIL-P-116, process C-1.

5.1.1.2 Drying. Relays shall be dried in accordance with MIL-P-116.

5.1.1.3 Preservative application. Preservatives shall not be used.

5.1.1.4 Unit packs. Each relay shall be individually unit packed in accordance with MIL-P-116, submethod IA-8 insuring compliance with the applicable requirements of that specification. Each unit pack exceeding 15 cubic inches shall be placed in a supplementary container conforming to PPP-B-566 or PPP-B-676.

5.1.1.5 Intermediate packs. Relays packaged as specified in 5.1.1.4, shall be placed in intermediate containers conforming to PPP-B-566 or PPP-B-676. Intermediate containers shall be uniform in size, shape, and quantities, and shall be of minimum tare and cube and shall contain multiples of 5 unit packs, not to exceed 100 unit packs. No intermediate packs are required when supplementary containers are used or when the total quantity shipped to a single destination is less than 100 unit packs.

5.1.2 Level C. The level C preservation for relays shall conform to the MIL-STD-794 requirements for this level.

5.2 Packing. Packing shall be level A, B, or C as specified (see 6.2).

5.2.1 Level A. The packaged relays shall be packed in wood boxes conforming to PPP-B-601, overseas type; PPP-B-621, class 2 or PPP-B-585, class 3. Closure and strapping shall be in accordance with the applicable container specification.

5.2.2 Level B. The packaged relays shall be packed in fiberboard containers conforming to PPP-B-636, class weather resistant, style optional, special requirements. The requirements for box closure, waterproofing, and reinforcing shall be in accordance with method V of the PPP-B-636 appendix.

5.2.3 Level C. The level C packing for relays shall conform to the MIL-STD-794 requirements for this level.

5.3 Marking. In addition to any special or other identification marking required by the contract (see 6.2), each unit pack and intermediate and exterior container shall be marked in accordance with MIL-STD-129.

5.4 General.

5.4.1 Exterior containers. Exterior containers (see 5.2.1, 5.2.2, and 5.2.3) shall be of a minimum tare and cube consistent with the protection required and shall contain equal quantities of identical stock numbered items to the greatest extent practicable.

5.4.2 Packaging inspection. The inspection of these packaging requirements shall be in accordance with 4.5.3.

6. NOTES

6.1 Intended use. Relays conforming to this specification are intended for use in dc or ac (single or polyphase) electronic and communication equipment as a means of controlling the making and breaking of circuits for electrically operated equipment and devices.

6.1.1 Paralleling contacts. Contacts shall not be paralleled on the assumption that doing so will increase their switching capacity. Being paralleled for the sake of redundancy may result in make before break, due to one transfer contact operating slightly ahead of the other.

6.2 Ordering data. The contract or purchase order should specify the following:

a. Title, number, and date of this specification.

b. Title, number, and date of the applicable specification sheet, and the specification sheet part number (see 3.1).

c. Levels of preservation and packing required (see 5.1 and 5.2).

d. Special or other identification marking required (see 5.3).

6.3 Qualification. With respect to products requiring qualification, awards will be made only for products which are, at the time set for opening of bids, qualified for inclusion in Qualified Products List No. QPL-83516 whether or not such products have actually been so listed by that date. The attention of the contractors is called to these requirements, and manufacturers are urged to arrange to have the products that they propose to offer to the Federal Government tested for qualification in order that they may be eligible to be awarded contracts or purchase orders for the products covered by this specification. The activity responsible for the qualified products list is the Electronic Support Directorate, Department of the Air Force; however, information pertaining to qualification of products may be obtained from the Defense Electronics Supply Center (DESC-E), Dayton, OH 45444.

6.4 Magnetic interference. Relays are subject to interaction with stray magnetic fields. To keep within operating parameters, relays shall be mounted as specified (see 3.1).

6.5 Glossary. The definitions listed herein are definitions of the technical terms as applied within this specification.

6.5.1 Coil. One or more windings on a common form.

6.5.2 Contacts. The current-carrying parts of a relay that open or close electrical circuits.

6.5.3 Contact, dry reed. A glass enclosed magnetically-operated contact using reeds as the contacting members.

6.5.4 Contact arrangement. The combination of contact forms that make up the entire relay switching structure.

6.5.5 Operate time. The interval between the application of a step function input signal and closing of all normally open contacts. Bounce time is included.

6.5.6 Pickup voltage. The voltage at which the armature seats against the coil core by assuming its fully operated position.

6.5.7 Relay. Most simply defined as an electrically controlled device that opens and closes electrical contacts to effect the operation of other devices in the same or another electrical circuit.

6.5.8 Release time. The interval between the trailing edge of a step function input signal and closing of all normally closed contacts. Bounce time is included.

6.6 Changes from previous issue. Asterisks are not used in this revision to identify changes with respect to the previous issue due to the extensiveness of the changes.

Custodian:
Air Force - 85

Review activities:
Air Force - 99
DLA - ES

Agent:
DLA - ES

Preparing activity:
Air Force - 85

(Project 5945-F508)