MILITARY SPECIFICATION

RELAYS, REED, DRY,
GENERAL SPECIFICATION FOR

This amendment forms a part of Military Specification MIL-R-83516A(USAF), dated 3 March 1983, and is approved for use by the Department of the Air Force and is available for use by all Departments and Agencies of the Department of Defense.

PAGE 9

* 4.6.2a., following the first sentence insert the following: "For group A testing, thermal shock may be performed with relays mounted in a suitable test rack to facilitate performance of electrical tests required during and after temperature cycling".

* 4.6.3, second and fourth lines: Delete "operations" and substitute "cycles". Make this same change wherever applicable in the specification.

4.6.3.1, delete in its entirety and substitute:

* "4.6.3.1 Noncontinuously monitored test. Contact resistance shall be measured as a voltage drop across the relay while the contacts are held closed and while test load current is being carried by the contacts. An oscilloscope shall be used to monitor opening and closing of the contacts under static load conditions to determine welding or sticking of the contacts. For life testing the number of cycles at which the above characteristics are monitored shall be 18,000, 36,000, 54,000, 72,000, 90,000, $1x10^6$, $5x10^6$, and every $5x10^6$ thereafter until the end of tests. For group A testing the number of cycles at which the above characteristics are monitored shall be 15,000, 30,000, 45,000, 60,000, 75,000, 90,000, and $1x10^6$. Contact resistance for life testing and group A testing shall be as specified in 4.6.12."

PAGE 12

FIGURE 1: Delete and substitute new figure 1 as printed on page 2 of this amendment.

NOTE: The margins of this amendment are marked with asterisks to indicate where changes from the previous amendment were made. This was done as a convenience only and the Government assumes no liability whatsoever for any inaccuracies in these notations. Bidders and contractors are cautioned to evaluate the requirements of this document based on the entire content irrespective of the marginal notations and relationship to the last previous amendment.

Custodian:
Air Force - 85

Review activities:
Air Force - 99
DLA - ES

Agent:
DLA - ES

Preparing activity:
Air Force - 85

(Project 5945-F552)

FSC 5945

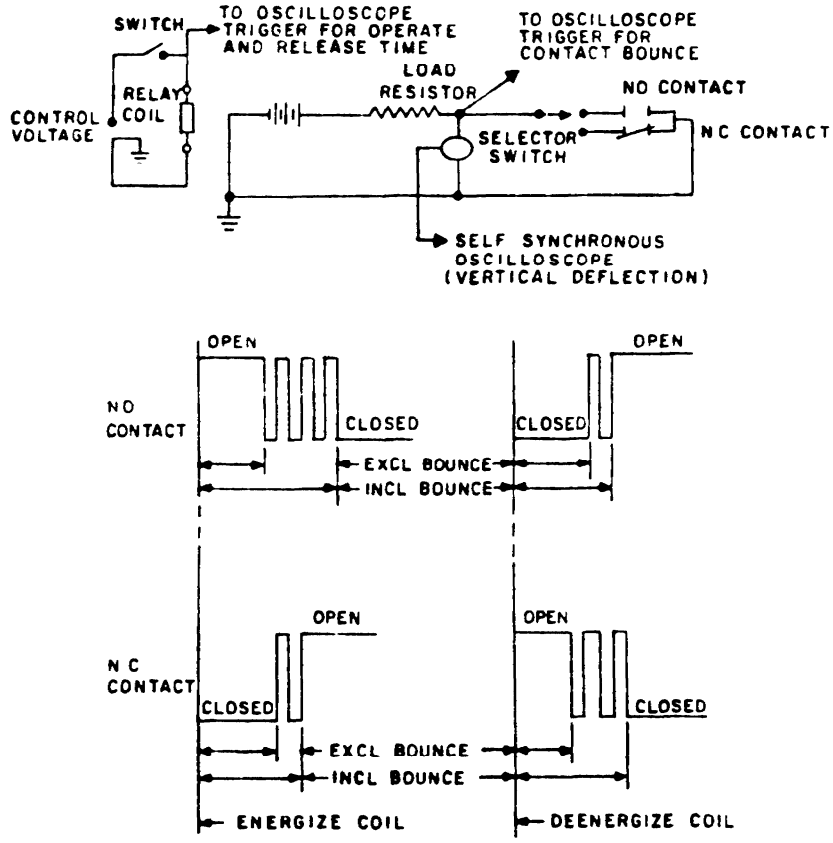

FIGURE 1. Typical circuit for operate and release time and contact bounce with typical traces.