FED. SUP CLASS
5930

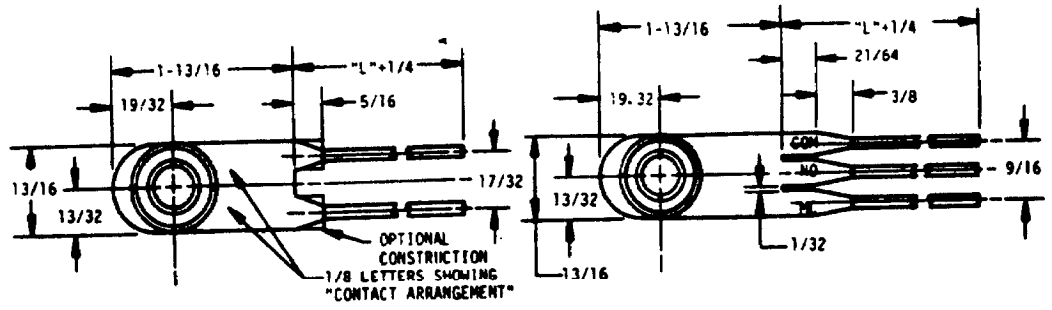

TYPE I

TYPE II

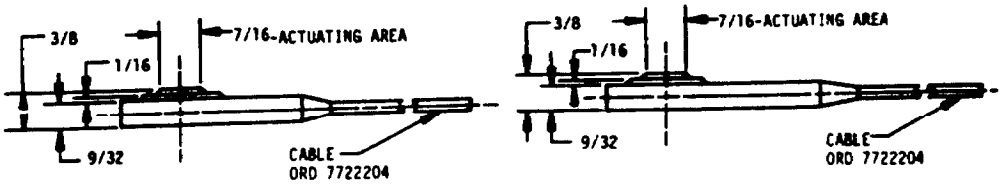

MS PART NO.	FORMER PART NO.	SWITCH TYPE	CONTACT ARRANGEMENT	"L" DIM.
MS39058-1	ORD 7974220	I SP/ST	NORMALLY OPEN	31
MS39058-2	ORD 7974221	I SP/ST	NORMALLY CLOSED	12-3/16
MS39058-3	ORD 7974222	II SP/ST	NORMALLY OPEN/ NORMALLY CLOSED	12-3/16

REQUIREMENTS:

(B) 1. SWITCH TYPE SHALL BE AS SPECIFIED IN TABULATION.

2. SWITCH CASING MATERIAL: RUBBER SC 410 AC_1 E_3 F_7 IN ACCORDANCE WITH MIL-R-3065.

3. ACTUATION FORCE: 1 TO 2 POUNDS WITHIN 1/8 INCH OF CENTER OF ACTUATION AREA.

RELEASE FORCE:..... 6 OUNCES MINIMUM
RELEASE TIME:..... 1/4 SECOND MAXIMUM
PRETRAVEL:..... .015 MINIMUM.
OVERTRAVEL:..... .015 MINIMUM
MOVEMENT DIFFERENTIAL:..... .005 MAXIMUM
CURRENT RATING:..... 7-1/2 AMPERES LAMP LOAD; 7-1/2 AMPERES INDUCTIVE LOAD (L/R RATIO .026); IS AMPERES RESISTIVE LOAD.

NOTES:

1. DIMENSIONS ARE IN INCHES. TOLERANCE IS ± 1/32 FOR FRACTIONS.

(B) 2. IN THE EVENT OF A CONFLICT BETWEEN THE TEXT OF THIS STANDARD AND THE REFERENCES CITED HEREIN, THE TEXT OF THIS STANDARD SHALL TAKE PRECEDENCE.

(B) 3. REFERENCED GOVERNMENT DOCUMENTS OF THE ISSUE LISTED IN THAT ISSUE OF DEFENSE INDEX OF SPECIFICATIONS AND STANDARDS (DoDISS) SPECIFIED IN THE SOLICITATION FORM A PART OF THIS STANDARD TO THE EXTENT SPECIFIED HEREIN.

(B) DENOTES CHANGE

APPROVED 9 SEPT 1958 REVISED (A) 12 JUNE 1962 (B) 16 FEBRUARY 1988

P. A. ARMY-AT Other Cust	INTERNATIONAL INTEREST	TITLE SWITCH, SENSITIVE - 24 VOLT DC (WATERPROOF)	MILITARY STANDARD MS39058(AT)
PROCUREMENT SPECIFICATION MIL-S-13484	SUPERSEDES:		SHEET 1 OF 1

5930-A632

DD FORM 672-1 COORDINATED

USER ACTIVITIES:

REVIEWER ACTIVITIES ARMY-MI DLA-ES

This military standard is approved for use by the US Army Tank-Automotive Command, Department of the Army, and is available for use by all Departments and Agencies of the Department of Defense. AMSC N/A

DISTRIBUTION STATEMENT A. Approved for public release; distribution is unlimited.

☆U.S. GOVERNMENT PRINTING OFFICE: 1988 — 506-033/91203