INCH-POUND
MIL-S-15291E(SH)
22 July 1991
SUPERSEDING
MIL-S-15291D(SH)
17 April 1981
(See 6.10)

MILITARY SPECIFICATION

SWITCHES, ROTARY, SNAP ACTION AND DETENT/SPRING RETURN ACTION, GENERAL SPECIFICATION FOR

This specification is approved for use by the Naval Sea Systems Command, Department of the Navy, and is available for use by all departments and agencies of the Department of Defense.

1. SCOPE

1.1 Scope. This specification covers snap-action and detent and spring action rotary switches for use in alternating and direct current applications, with ratings as specified (see 3.1).

1.2 Class. The class designation shall be composed of a number indicating the current rating followed by the letters SR or SRN, the component designator for rotary switches covered by this specification (see table I).

TABLE I *Class designation.*

Class	Maximum current in amperes	Maximum Vac	Maximum Vdc	Positioning mechanism
1SR	10	125	120	Snap
1SRN	10	125	-	Detent/spring return
3SR	30	500	250	Snap
6SR	60	500	250	Snap
20SR	200	500	250	Snap

1.2.1 Positioning mechanism. Detent and spring return mechanism, designated by the letter N, shall be driven directly from the handle shafts with an increment of handle and blade rotation of 90 degrees. Omission of the letter N from the class designation shall mean that a snap mechanism which shall activate from a handle shaft rotation of not greater than 135 degrees is required. Actuation of the snap mechanism shall cause the switch blades to rotate 90 degrees to

Beneficial comments (recommendations, additions, deletions) and any pertinent data which may be of use in improving this document should be addressed to Commander, Naval Sea Systems Command, SEA 55Z3, Department of the Navy, Washington, DC 20362-5101 by using the self-addressed Standardization Document Improvement Proposal (DD Form 1426) appearing at the end of this document or by letter

AMSC N/A - FSC 5930
DISTRIBUTION STATEMENT A. Approved for public release, distribution is unlimited

the directed position at a speed independent of the speed at which the handle shaft is turned After the blades have moved into the directed position and the handle has been released, the handle shall reverse its rotation approximately 45 degrees to correspond with the 90-degree switch throw increment.

1.3 Identification. Switches covered by this specification shall be identified by a part or identifying number (PIN), (see 3.1 and 6.8). Type designations, where assigned in addition to PINs, are for reference to identifications established in previous issues of this specification (see 3.3 and 6.7).

2. APPLICABLE DOCUMENTS

2.1 Government documents.

2.1.1 Specifications, standards, and handbooks. The following specifications, standards, and handbooks form a part of this document to the extent specified herein. Unless otherwise specified, the issues of these documents are those listed in the issue of the Department of Defense Index of Specifications and Standards (DODISS) and supplement thereto, cited in the solicitation (see 6.2).

SPECIFICATIONS

FEDERAL

QQ-B-750	Bronze, Phosphor, Bar, Plate, Rod, Sheet, Strip, Flat Wire, and Structural and Special Shaped Sections
QQ-C-502	Copper Rods and Shapes, and Flat Products with Finished Edges (Flat Wire Strips and Bars)
QQ-C-576	Copper, Flat Products with Slit, Slit and Edge-Rolled, Sheared, Sawed, or Machined Edges, (Plate, Bar, Sheet, and Strip)
QQ-N-290	Nickel Plating (Electrodeposited)
PPP-F-320	Fiberboard Corrugated and Solid Sheet Stock (Container Grade) and Cut Shapes

MILITARY

MIL-M-14	Molding Compounds, Thermosetting
MIL-S-901	Shock Tests, HI (High Impact) Shipboard Machinery, Equipment, and Systems, Requirements for

MIL-A-8625	Anodic Coatings, for Aluminum and Aluminum Alloys
MIL-P-15035	Plastic Sheet; Laminated, Thermosetting, Cotton-Fabric-Base, Phenolic-Resin
MIL-E-17555	Electronic and Electrical Equipment, Accessories, and Provisioned Items (Repair Parts): Packaging of
MIL-L-19140	Lumber and Plywood, Fire-Retardant Treated
MIL-G-23827	Grease, Aircraft and Instrument, Gear and Actuator Screw, NATO Code Number G-354, Metric

STANDARDS

FEDERAL

FED-STD-595	Colors Used in Government Procurement
FED-STD-H28	Screw-Thread Standards for Federal Service

MILITARY

MIL-STD-105	Sampling Procedures and Tables for Inspection by Attributes
MIL-STD-167-1	Mechanical Vibrations of Shipboard Equipment (Type I – Environmental and Type II – Internally Excited)
MIL-STD-202	Test Methods for Electronic and Electrical Component Parts
MIL-STD-454	Standard General Requirements for Electronic Equipment
MIL-STD-1285	Marking of Electrical and Electronic Parts

(Unless otherwise indicated, copies of federal and military specifications, standards, and handbooks are available from the Standardization Documents Order Desk, Bldg. 4D, 700 Robbins Avenue, Philadelphia, PA 19111-5094.)

2.2 Non-Government publications. The following document forms a part of this document to the extent specified herein. Unless otherwise specified, the issues of the documents which are DOD adopted are those listed in the issue of the DODISS cited in the solicitation Unless otherwise specified, the issues of documents not listed in the DODISS are the issues of the documents cited in the solicitation (see 6.2).

AMERICAN SOCIETY FOR TESTING AND MATERIALS (ASTM)

B 633 Standard Specification for Zinc On Iron and Steel, Electrodeposited Coatings of; (DOD adopted)

(Application for copies should be addressed to the American Society for Testing and Materials, 1916 Race Street, Philadelphia, PA 19103.)

(Non-Government standards and other publications are normally available from the organizations that prepare or distribute the documents. These documents also may be available in or through libraries or other informational services.)

2.3 Order of precedence. In the event of a conflict between the text of this document and the references cited herein (except for specification sheets), the text of this document takes precedence. Nothing in this document, however, supersedes applicable laws and regulations unless a specific exemption has been obtained.

3. REQUIREMENTS

3.1 Specification sheets. The individual item requirements shall be as specified herein and in accordance with the applicable specification sheet. In the event of any conflict between the requirements of this specification and the specification sheet, the latter shall govern.

3.2 Qualification. Switches furnished under this specification shall be products which are authorized by the qualifying activity for listing on the applicable qualified products list at the time of award of contract (see 4.4 and 6.6).

3.3 Switch types. Switches furnished under this specification shall be as specified in 3.3.1 and 3.3.2.

3.3.1 Switches covered by specification sheet and identified by PINs. Switches which are completely defined by a military specification sheet (see 3.1) shall be as specified in 6.2.

3.3.2 Switch types not shown on a specification sheet. Where the specification sheet does not show a specific switch type (see 3.3.1), the individual part requirements shall be as specified in complementary documents such as manufacturer's drawings or data sheets (see 6.2). The switches shall be a product of the basic style, design and construction as the switches shown on the specification sheets and shall be acquired from a source listed on the qualified products list for the same specification sheet (see 3.2). Unless otherwise specified (see 6.2), the individual switch shall comply with the inspection requirements shown in 4.6

3.4 Material. Unless otherwise specified (see 6.2), material shall be as specified herein. When a definite material is not specified, a material which will enable the switches to meet the performance requirements of this specification shall be used. Acceptance of any constituent material shall not be construed as a guarantee of the acceptance of the finished product.

3.4.1 Metals. Metals shall be of sea water corrosion-resistant alloys or shall be zinc plated in accordance with ASTM B 633; nickel plated in accordance with class 1, grade G of QQ-N-290 or anodized in accordance with MIL-A-8625 (aluminum alloys only), to resist corrosion. Operating springs lubricated in accordance with 3.4.1.4.1 and enclosed in snap mechanisms need not be plated to resist corrosion.

3.4.1.1 Aluminum. Aluminum shall not be used for major structural parts, such as the front plate, bushing, shaft, detent, and shall not be used for current carrying.

3.4.1.2 Ferrous material. Ferrous material shall not be used for current carrying parts.

3.4.1.3 Dissimilar metals. When dissimilar metals are used in intimate contact with each other, protection against electrolysis and corrosion shall be provided. The use of dissimilar metals in contact, which tend toward active electrolytic corrosion (particularly copper alloys, copper, steel used in contact with aluminums or aluminum alloy) is not acceptable. However, metal plating or metal spraying of dissimilar base metals to provide similar or suitable abutting surfaces is permitted The use of dissimilar metals separated by a suitable insulating material is also permitted.

3.4.1.4 Lubrication.

3.4.1.4.1 Operating mechanism. The operating mechanism and other mechanical moving parts shall be lubricated with a compound in accordance with MIL-G-23827.

3.4.1.4.2 Contacts. Contacts shall be lubricated with a compound in accordance with MIL-G-23827, or equal. The method for fabricating the contacts shall result in the application of a minute amount of lubrication on the contacts.

3.4.2 Insulation.

3.4.2.1 Plastic laminates. Unless otherwise specified (see 3.1 and 6.2), plastic laminates shall be in accordance with MIL-P-15035, type FBE.

3.4.2.2 Plastic molding. Molded plastic insulating spacers (stationary contact carriers) and rotors shall be type MAI-60 or MAI-30 of MIL-M-14. Color shall be gray, approximating color chip Number 26307 of FED-STD-595. Plastic handles shall be molded of CFI-5 or CFI-10 of MIL-M-14, color black. Molded parts shall be free of flash. Surfaces shall comply with MIL-M-14 Material for molded plastic parts not covered herein, shall be as specified in 3.1.

3.4.2.3 Fungus-resistance. Insulation material shall be nonfungus nutrient in accordance with MIL-STD-454, requirement 4.

3.4.2.4 Flammable material. Insulation material shall be fire retardant in accordance with MIL-STD-454, requirement 3.

3.4.2.5 Toxic and hazardous material. Toxic and hazardous materials shall conform to requirement 1 of MIL-STD-454.

3.4.3 Recovered materials. Unless otherwise specified herein, all equipment, material, and articles incorporated in the products covered by this specification shall be new and may be fabricated using materials produced from recovered materials to the maximum extent practicable without jeopardizing the intended use. The term "recovered materials" means materials which have been collected or recovered from solid waste and reprocessed to become a source of raw materials, as opposed to virgin raw materials. None of the above shall be interpreted to mean that the use of used or rebuilt products is allowed under this specification unless otherwise specifically specified.

3.5 Design and construction. Switches shall be of closed construction so that the switching mechanism and the switching contacts are fully enclosed (except terminals and unused terminal locations), to prevent foreign matter from entering the switch mechanism or interfering with the contacts. Switches shall be constructed to ensure proper operation when mounted in any position. The switches shall be of the design, construction, class, and physical dimensions specified (see 3.1) and the switch circuit configuration shall conform to the applicable switching characteristics specified (see 3.1 and 6.2).

3.5.1 Assembled switches. Parts of the assembled switch shall work freely and the switch shall be positive in action.

3.5.2 Relation of parts. In assembling the switch, the relationship between the handle shaft assembly and the switch blades shall be as specified in 3.1 so that the shaft or handle positions will agree with the mounting of switches in electrical switchboards and equipments.

3.5.3 Contact mating. The moving switch blade contacts shall mate with both sides of the stationary contacts at the contact engagement areas with uniform positive pressure.

3.5.4 Threaded parts. Unless otherwise specified (see 3.1 and 6.2), threaded parts shall be in accordance with FED-STD-H28. Wherever possible, unified screw threads shall be used. Where a special diameter-pitch combination is required, the thread shall be of American National Form and of any pitch which is used in the fine-thread series.

3.5.4.1 Engagement of threaded parts. Threaded parts shall engage at least three full threads in soft metals like aluminum and its alloys. Not less than two full threads shall be used in harder materials such as brass or steel. When a screw mates with a plastic part, a threaded metal insert shall be molded therein.

3.5.5 Locking of screw-thread assemblies. Unless otherwise specified (see 3.1), except for terminal hardware screw-thread assemblies shall be rendered resistant to loosening under vibration. Unless otherwise specified (see 3.1), bronze, stainless steel or plated steel split type, or internal-tooth lockwashers shall be provided under nuts or screw heads. The use of locknuts is permitted in lieu of lockwashers.

3.5.6 Terminal hardware. The terminal hardware shall be as specified (see 3.1 and 6.2). If the terminal hardware is not assembled to the switch, it shall be placed in a bag and firmly secured to the switch.

3.5.7 Moving contact material. Unless otherwise specified (see 3.1), the movable contact material shall be composition A phosphor bronze in accordance with QQ-B-750.

3.5.8 Stationary contact material. Unless otherwise specified (see 3.1), the stationary contact material shall be copper in accordance with QQ-C-576. Threaded holes shall have not less than three full threads.

3.5.9 Contact studs. For rear connected switches, the contact studs shall be copper in accordance with QQ-C-502.

3.5.10 Handles. Unless otherwise specified (see 6.2), switches shall be provided with handles as specified (see 3.1).

3.5.11 Operating shafts. The operating shaft shall be insulated from current carrying members.

3.5.12 Rear support for front mounted switch assemblies. Rear support is recommended for front mounted switch assemblies where the total number of decks, including spacers, exceeds 9 and shall have features which will readily allow attachment of brackets or other supports to the rear of the switch.

3.6 Performance.

3.6.1 Operation. Class SR switches shall transfer from one position to the next adjacent position, in either direction, when the handle shafts are rotated not more than 135 degrees from the initial position. Class SRN switches shall transfer similarly when the handle shafts are rotated 60 to 90 degrees Unless otherwise specified, the rest positions of switch handles shall be integral multiples of 90 degrees, with a non-cumulative tolerance of plus or minus 3 degrees, from the off

or normal positions (see 3.1). Switches having limited rotation (stop) or momentary positions (spring return to a detented position) shall not change circuit continuity, open or closed as specified, when rotated into a stop from the adjacent detented or momentary position.

3.6.1.1 Momentary position return. The handle shaft shall return to the rest position, within plus or minus 5 degrees and each contact shall return to the condition (open or closed) that is normal in the rest position (see 4.8.1.1). After return to rest position, handle shaft float shall not exceed 3 degrees. This requirement is applicable to classes 1SR and 1SRN only.

3.6.1.2 Stop strength (applicable to switches with stops). The stop shall not be overrun, and there shall be no damage to the switch or malfunction of operation (see 4.8.1.2 and 6.2).

3.6.1.3 Transfer time (applicable to snap action transfer only). The transfer time shall not exceed ten milliseconds (see 4.8.1.3)

3.6.2 Moisture resistance. The insulation resistance, immediately after conclusion of the test and while the switches are still in the humidity chamber, shall be greater than 10 megohms (see 4.8.2). At the end of the drying period, the insulation resistance shall be greater than 100 megohms. At the conclusion of the test there shall be no evidence of corrosion, breaking, cracking, spalling or loosening of hardware, and the mounting and terminal hardware shall be readily removable.

3.6.3 Salt spray (corrosion). There shall be no evidence of excessive corrosion (see 4.8.3). Excessive corrosion is defined as corrosion which interferes with the electrical or mechanical performance, or, in the case of plated metals, corrosion which has passed through the plating and exposed the base metal. After the test, mounting and terminal hardware shall be readily removable

3.6.4 Vibration. There shall be no opening of closed contacts in excess of 10 microseconds. There shall be no change in shaft position or evidence of broken, loose, deformed, or displaced parts (see 4.8.4).

3.6.5 High-impact shock. Switches shall remain mechanically and electrically operative and there shall be no opening of closed contacts in excess of 20 milliseconds, or closure of open contacts, or evidence of broken, loose, deformed, or displaced parts (see 4.8.5).

3.6.6 Dielectric withstanding voltage. Switches shall withstand the application of the specified voltages without arcing, breakdown of insulation, or damage, and there shall be no leakage current greater than 100 microamperes (see 4.8.6).

3.6.7 Overload. The switches shall remain mechanically and electrically operative when subjected to the overload test specified (see 4 8.7) (applicable to 1SR and 3SR only).

3.6.8 Contact resistance. The contact resistance shall not exceed the following values for the class of switch indicated (see 4.8.8)

Class	Maximum allowable contact resistance (ohms)
1SR and 1SRN	0.02
3SR	0.01
6SR	0.005
20SR	0.0015

3.6.9 Temperature rise. The temperature rise at the switch stationary contact shall not exceed 50 degrees celsius (°C) when measured as specified (see 4.8.9).

3.6.10 Endurance. The switch shall remain mechanically and electrically operative during and following the endurance test as specified (see 4.8.10.1 or 4.8.10.2, as applicable).

3.6.11 Insulation resistance. The insulation resistance shall be not less than 200 megohms (see 4.8.11).

3.7 Marking. Except as indicated herein (see 6.2), marking shall be in accordance with MIL-STD-1285.

3.7.1 Identification of product. Switches shall be marked with the information required in 3.7.3 or 3.7.4 as applicable. Electrical ratings shall be marked on the switch caps. Other required marking shall be located on the terminal boards of back-connected switches and, except for terminal markings, on the base plates of side-connected switches. Terminal boards shall be marked by silk screening, hot stamping, or engraving. Base plates and caps shall be marked by die stamping or engraving.

3.7.2 Terminal marking. Terminal marking on back-connected switches shall be located on the terminal boards, adjacent to the terminals designated. Terminal marking on side-connected switches shall be die stamped on the terminals, clear of the screw heads, and shall be visible from the rear of front mounted switches and from the front of base mounted switches.

3.7.3 Switches covered by specification sheets. Switches covered by specification sheets shall be identified by:

a. Electrical rating
b. Part or identifying number (PIN) (for example M15291/1-001)
c. Type designation, where assigned (for example 1SR2A1) (see 1.3 and 6.7)
d. Manufacturer's name, symbol, or CAGE
e. Date code
f. Terminal identification as specified in the applicable specification sheet

3.7.4 Switches not covered by specification sheets. Switches not covered by specification sheets shall be identified by:

a Electrical rating
b Manufacturer's part number
c. Government drawing number
d Manufacturer's name, symbol, or CAGE
e. Date code
f. Terminal identification.

4. QUALITY ASSURANCE PROVISIONS

4.1 Responsibility for inspection. Unless otherwise specified in the contract or purchase order the contractor is responsible for the performance of all inspection requirements (examinations and tests) as specified herein. Except as otherwise specified in the contract or purchase order, the contractor may use his own or any other facilities suitable for the performance of the inspection requirements specified herein, unless disapproved by the Government. The Government reserves the right to perform any of the inspections set forth in the specification where such inspections are deemed necessary to ensure supplies and services conform to prescribed requirements.

4.1.1 Responsibility for compliance. All items shall meet all requirements of sections 3 and 5. The inspection set forth in this specification shall become a part of the contractor's overall inspection system or quality program (see 6.3). The absence of any inspection requirements in the specification shall not relieve the contractor of the responsibility of ensuring that all products or supplies submitted to the Government for acceptance comply with all requirements of the contract. Sampling inspection, as part of the manufacturing operations, is an acceptable practice to ascertain conformance to requirements, however, this does not authorize submission of known defective material, either indicated or actual, nor does it commit the Government to accept defective material.

4.1.2 Inspection conditions. Unless otherwise specified herein, inspections shall be performed in accordance with the test conditions specified in the "General requirements" of MIL-STD-202.

4.2 Classification of inspections. The inspection requirements specified herein are classified as follows:

a. Materials inspection (see 4.3)
b. Qualification inspection (see 4.4)
c Quality conformance inspection (see 4.5).

4.3 Materials inspection. Materials inspection shall consist of certification that the materials listed in table II, used in fabricating the switches, are in accordance with the applicable referenced specifications or requirements prior to such fabrication.

TABLE II *Materials inspection*

Material	Requirement	Applicable document
Material plating or treatment	3 4.1	ASTM B 633, QQ-N-290, or MIL-A-8625
Lubrication	3 4.1 4	MIL-G-23827
Insulation		
Plastic	3.4.2.1 and 3 4.2.2	MIL-M-14 or MIL-P-15035
Fungus	3.4.2.3	MIL-STD-454
Flammable material	3 4.2.4	MIL-STD-454
Toxic and hazardous material	3 4.2.5	MIL-STD-454
Metals		
Bronze	3.5.7	QQ-B-750
Copper	3.5.8 and 3.5.9	QQ-C-576 and QQ-C-502

4.4 Qualification inspection. Qualification inspection shall be conducted at a laboratory satisfactory to the Naval Sea Systems Command (NAVSEA). Qualification shall consist of the examination and tests specified in tables III A and III B.

4.4.1 Samples for qualification. Sample switches of each class for which qualification is sought shall be subjected to the tests specified in tables III A and III B, in the order shown. The SRN class is considered a distinct class, however when qualifying both the class 1SR and class 1SRN reduced testing of the 1SRN is permitted (see table III B).

TABLE III. Qualification inspection.

Test	Requirement	Test	Sample number1/2/						
			1	2	3	4	5	6	7
General examination	3.5 and 3.7	4.7	1	1	1	1	1	1	1
Operation	3.6.1	4.8.1	2	2	2	2	2	2	2
Momentary position return	3.6.2	4.8.2		3			3	3	
Stop strength	3.6.3	4.8.3		4			4	4	
Vibration	3.6.4	4.8.4			3	3	5		
Shock	3.6.5	4.8.5			4	4	6		
Dielectric withstanding voltage	3.6.6	4.8.6			5	5	7		
Overload	3.6.7	4.8.7			6				
Contact resistance	3.6.8	4.8.8	3	5	3	7	6	8	5
Temperature rise	3.6.9	4.8 9	4	6	4			6	
Endurance, ac	3.6.10	4.8.10.1	5	7					7
Endurance, dc	3.6.10	4.8.10.2			5				
Insulation resistance	3.6.11	4.8.11	6	8	6	8			8
Operation	3.6.1	4.8 1	7	9	7	9	7	9	9
General examination	3.5	4 7	8	10	8	10	8	10	10

1/ For classes 1SR, 3SR, 6SR and 20SR samples 1 through 5 shall be tested. Samples 1, 2, and 5 shall be front mounted and have a minimum of three poles. Sample 2 shall have stops. Samples 3 and 4 may be base mounted and have 2 poles.

2/ For class 1SRN, samples 1, 6, and 7 shall be tested. Samples 1 and 6 shall have two-level operating mechanisms (figure 1 of MIL-S-15291/4) and the maximum number of poles specified for this mechanism (see 3.1). Sample 7 shall have a single level operating mechanism, shall provide single line break and shall be tested with a single-phase load.

TABLE III A. *Qualification inspection for SR classes.*

Inspection	Requirement	Test method	Sample number[1]						
			1	2	3	4	5	6	7
General examination	3.5 and 3.7	4.7	1	1	1	1	1	1	1
Operation	3 6 1	4.8.1	2	2	2	2	2	2	2
Momentary position return	3.6 1.1	4.8 1 1		3					
Stop strength	3 6 1.2	4 8 1.2		4					
Transfer time	3.6.1.3	4.8 1.3	3		3	3	3	3	3
Moisture resistance	3.6.2	4.8.2						4	4
Salt spray	3 6.3	4 8.3						5	5
Vibration	3 6 4	4.8 4				4	4		
Shock	3 6 5	4.8.5				5	5		
Dielectric withstanding voltage	3 6 6	4 8 6	4	5		6	6	7	
Overload	3 6 7	4 8 7				7			
Contact resistance	3.6.8	4.8.8	5	6	4		7	8	7
Temperature rise	3 6.9	4.8.9	6	7	5				
Endurance, ac	3 6.10	4 8 10 1	7	8					
Endurance, dc	3 6 10	4 8 10 2			6				
Insulation resistance	3 6 11	4 8.11	8	9	7	8			8
Transfer time	3.6.1.3	4.8.1.3	10	11	9	10	9	10	11
Operation	3 6.1	4.8 1	9	10	8	9	8	9	9
General examination	3.5	4.7	11	12	10	11	10	11	12

[1]For classes 1SR, 3SR, 6SR, or 20SR the test sample shall be of the following types for each class

Sample

1 Type SR3B2 - Front mounted, side connected
2 Type SR3B2 - With stop and spring return
3 Type SR3A2 - Front mounted, side connected
4 Type SR3B1 - Front mounted, back connected
5 Type - Longest front mounted switch not requiring rear support listed on the applicable specification sheet
6 Type SR3A3 - Base mounted, side connected

7. Type SR3B3 - Base mounted, side connected.

TABLE III B. *Qualification inspection for SRN classes.*

Inspection	Requirement	Test method	Sample number[1,2]						
			1	2	3	4	5	6	7
General examination	3.5 and 3.7	4.7	1	1	1	1	1	1	1
Operation	3.6.1	4.8.1	2	2	2	2	2	2	2
Momentary position return	3.6 1.1	4 8 1.1		3			3		3
Stop strength	3.6.1.2	4.8.1.2		4			5		4
Moisture resistance	3.6.2	4.8.2				3	6		
Salt spray	3.6.3	4.8.3				4	7		
Vibration	3.6 4	4.8.4		5	4				
Shock	3.6.5	4.8.5		6	7				
Dielectric withstanding voltage	3.6.6	4 8.6	3	7	8	5	8	3	5
Overload	3.6 7	4.8.7			9				
Contact resistance	3.6.8	4.8.8	4	8	10	6	9	4	6
Temperature rise	3.6.9	4 8.9	5						7
Endurance, ac	3.6 10	4 8.10.1	6						8
Insulation resistance	3.6 11	4.8.11	7	9	11	7	10	5	9
Operation	3.6.1	4.8.1	8	10	12	8	11	6	10
General examination	3.5	4.7	9	11	13	9	12	7	11

[1]Samples for qualification of class 1SRN switches shall be of the following types:

Samples 1, 2, and 4 - M15291/4-001
Samples 3 and 5 - M15291/4-006
Samples 6 - M15291/4-004
Samples 7 - M15291/4-002.

[2]When qualifying both class 1SR and 1SRN only samples 1, 2, and 7 are required to be tested

4.4.2 Retention of qualification. In order to retain qualification, the contractor shall forward via the Government inspector, at 12-month intervals, to the activity responsible for qualification, a summary of the results of group A and B inspection tests performed during that interval, including the number and type of any part failures. Summaries of results of group C tests shall be forwarded at 3-year intervals for classes 1SR, 1SRN, and 3SR and at 4-year intervals for classes 6SR and 20SR. Group B and C test reports shall be forwarded to the qualifying activity and shall include copies of original data sheets Each summary and test report shall be validated by the Government quality assurance representative. If the test results indicate nonconformance with specification requirements, requalification will be required unless proof of corrective action for each failure is provided. Failure to submit the summaries will result in loss of qualification for that

product In addition to the periodic submission of inspection data, the contractor shall immediately notify the qualifying activity at any time during the intervals that inspection data indicates failure of the qualified product to meet the requirements of the specification. In case there is no production during the intervals, a statement to this effect shall be forwarded to the qualifying activity.

4.4.3 Qualification inspection requirements for switches not covered by specification sheets. Qualification inspection requirements for switches not covered by specification sheets shall be performed by the contractor after award of contract and prior to production. Unless otherwise specified (see 6.2), inspection shall be as specified in 4 4

4.4.3.1 Samples. Unless otherwise specified (see 6.2), the samples and test routine shall be as specified in 4.4.1 and table III. This acceptance is valid only on the contract under which it is granted unless extended by the Government to another contract Samples subjected to this inspection shall not be delivered on the contract or order.

4.4.3.2 Failures. One or more failures will be cause for refusal to grant inspection acceptance.

4.5 Quality conformance inspection.

4.5.1 Inspection of product for delivery. Inspection of product for delivery shall consist of groups A, B, and C inspection (see 6.3).

4.5.2 Inspection lot. All rotary switches of the same class presented for delivery at one time shall be considered a lot. The lot may include the entire contract quantity or it may be the production of any convenient time period.

4.5.3 Group A inspection. Sample switches shall be selected from each lot in accordance with inspection level II of MIL-STD-105 for examination and tests specified in table IV and shall be conducted in the order listed. Classification of defects shall be as specified in table V. Defective switches shall not be offered for delivery until the defects have been corrected and the rotary switches re-examined and retested.

TABLE IV. *Group A inspection.*

Inspection	Requirement	Test method
General examination	3.5 and 3 7	4.7
Operation	3 6 1	4 8 1
Momentary position return (where applicable)	3 6 1 1	4 8 1 1
Dielectric withstanding voltage	3 6 6	4 8 6

TABLE V. *Classification of defects*

Categories	Defects
Critical.	
1	Operating shaft not insulated from live circuits for protection against electric shock
Major.	
101	Class and type not as specified
102	Materials other than those specified in this specification; evidence of unauthorized materials used, evidence of breaks, cracks, splits, holes, porosity, deep pits, or foreign inclusions
103	Parts not coated to prevent corrosion as required; electrodepositing nonconforming, coating not smooth or uniform, bare or uncoated areas; nonadherent, evidence of flaking or peeling
104	Switch not positive acting; evidence of sticking, binding, or excessive looseness
105	Number of positions, voltage, and contact rating not as specified
106	Relation of flat or hole on handle shaft to switch blades not as specified
107	Terminal binding screws damaged, missing, or nonconforming; threads chipped, torn, crossed, or stripped
108	Cap assembly not as specified, threaded bushing and jam nut damaged or nonconforming, threads not as specified, chipped, not secured as required; stop pin missing, damaged or forming, height not within required limits or not located as specified when required
109	Overall height to shaft end face and to cap exceeds maximum limits; space between handle and bushing not within tolerances; overall width of cap not within limits
110	Handle missing, damaged or nonconforming; not smooth or free from sharp edges and flash; not fitted or assembled to shaft and lever drive screw as required; screw and lockwasher missing, damaged or nonconforming; screw not secured or recessed as required
111	Securing rods nonconforming; ends not firmly riveted; nuts and washers missing; damaged, nonconforming or not tightened and positioned as required
112	Parts missing, damaged, nonconforming, improperly fitted or assembled
113	Surfaces not smooth, not free from dents, nicks, burrs, fins, or sharp edges
114	Terminal board, when required, missing, damaged or nonconforming, contact terminals not positioned or secured as required, terminal markings missing, incorrect, illegible, or not stamped as required
115	Transfer time not within specified limit
Minor	
201	Preservation, packaging, and packing not as required
202	Marking, drawing number, type, date code, and manufacturer's monogram missing, incorrect, illegible, or not stamped and located as specified

4.5.3.1 Sampling plan. As a minimum, the contractor shall inspect a sample quantity in accordance with the sampling plan specified herein. Sample size depends on classification of the characteristic as shown in table VI. The sample size for each characteristic is shown in table VI below. If one or more defects is found in any sample, the entire lot shall be rejected. The contractor has the option of screening 100 percent of the rejected lot for all specified attributes, or providing a new lot, which shall be inspected in accordance with the sampling plan.

TABLE VI. Sampling.

Lot size characteristic	Critical characteristic	Major characteristic	Minor characteristic
2 to 50	All	5	3
51 to 90	All	7	6
91 to 150	125	11	7
151 to 280	125	13	10
281 to 500	125	16	11
501 to 1200	125	19	15
1201 to 3200	125	23	18
3201 to 10,000	192	29	22
10,001 to 35,000	294	35	29
35,001 to 150,000	294	40	29

4.5.4 Group B inspection. Two switches of each class shall be selected for group B tests at the end of each 12-month interval for 1SR, 1SRN, and 3SR switches and at the end of each 24-month interval for 6SR and 20SR switches. Group B tests and examination shall be as specified in table VII. Whenever the manufacturer has had no production for the switch class in the 12- or 24-month period, the samples shall be selected from the first production run following this period. Whenever the requirements for group B tests coincide with group C, group B tests will not be performed (see 4.5.5) The sample switches for group B tests shall not be delivered on a contract or order.

TABLE VII *Group B inspection.*

Inspection	Requirement	Test method
Stop strength	3 6 1 2	4.8.1 2
Dielectric withstanding voltage	3 6.6	4 8 6
Contact resistance	3.6 8	4 8.8
Temperature rise	3 6.9	4 8.9
Endurance, ac	3 6 10	4 8.10.1
Insulation resistance	3.6.11	4.8.11

4.5.5 Sampling for group C tests. At 3-year intervals for classes 1SR, 1SRN, and 3SR and at 4-year intervals for classes 6SR and 20SR, following qualification approval, test samples selected in accordance with table VIII shall be subjected to the tests specified in table III for like numbered samples. Whenever the manufacturer has had no production for the switch class in the specified period, the samples shall be selected from the first production following this period. The inspection may also be required by the contracting activity when an important design feature of the switch or the material of a vital part has been changed Sample switches shall not be delivered on a contract or order

TABLE VIII. *Sampling for group C tests.*

Switch class	Test sample numbers (see table III)
1SR	1,4, 5, and 7
1SRN	2,5
3SR	1,4, 5, and 7
6SR	1,5, and 7
20SR	1,5, and 7

4.6 Acceptance — groups B and C tests. The results of each test shall be compared with the specification requirements. In the event of failure to conform to this specification for any of the applicable tests, the contractor shall correct the cause of failure on future production units and shall repair the deficiency on all undelivered switches produced on the contract or order. Quality conformance inspection shall be discontinued until corrective action has been taken. After the corrective action, sample units shall be subjected to the necessary group B or C inspection (all tests or the failed tests, at the option of the inspector). Group A inspection may be reinstituted; however, final acceptance shall be withheld until the group B or C inspection, as applicable, has shown that the corrective action was successful.

4.7 General examination. Switches shall be examined to verify that the materials, design, construction, physical dimensions, and marking are in accordance with this specification. Defects are classified as shown in table V

4.8 Test procedures.

4.8.1 Operation. The operation test shall consist of the minimum number of electrical operations to ascertain that the switching action is in accordance with 3.6.1. The switch shall be energized at any convenient voltage and current within the switch rating A suitable audible or visual device shall be used to indicate the opening and closing of the circuits at each position and/ or each deck for multideck switches. Suitable measuring devices shall be used to determine whether transfer action is as specified.

4.8.1.1 Momentary position return. The switch shall be mounted by its normal mounting means. The switch operating shaft shall be rotated 75 ± 5 degrees from an adjacent rest position toward a momentary position and released. This test shall be made for each momentary position of the switch blades. Normally closed circuits shall be tested for continuity and handle shaft displacement and float shall be measured

4.8.1.2 Stop strength. The switch shall be mounted by its normal mounting means The switch shaft shall be rotated to the clockwise and counterclockwise extremes and a torque in accordance with table IX shall be applied to the switch shaft and maintained for 10 seconds Switch contacts shall be monitored for open or closed conditions in the stop positions

TABLE IX. Stop strength.

Switch class	Torque (inch-pounds)
1SR	30
1SRN	50
3SR	100
6SR	100
20SR	100

4.8.1.3 Transfer time (see 3.6.1.3). The time between the opening of an initially closed contact and the closing of the initially open contact shall be measured using an oscilloscope capable of measuring to 500 microseconds. The contacts being used for measurement shall be of the make before-break style and shall be 90 degrees a part. Three clockwise measurements and three counterclockwise measurements shall be taken and the average transfer time shall comply with 3.6.1.3.

4.8.2 Moisture resistance (see 3.6.2). Switches shall be tested in accordance with method 106 of MIL-STD-202. The following details shall apply:

a. Mounting – Switches shall be mounted on a corrosion-resistant metal panel with the shaft in the vertical position.

b. Polarization – During steps 1 to 6 inclusive, a polarization voltage of 100 Vdc shall be applied between two terminals tied together on opposite sides and adjacent to a through bolt, or a terminal adjacent to a grounded metal portion if no through bolting is used, and the metal panel. Polarization voltage shall also be applied to two other adjacent terminals elsewhere on the switch section. One section of each switch shall be so tested. The negative polarity shall be applied to the metal panel. Load voltage is not applied.

c. Final measurements – Immediately after the conclusion of the test and while the switches are still in the humidity chamber, insulation resistance shall be measured as specified in 4.8.11, unless otherwise specified (see 3.1). At the end of the drying period, insulation resistance shall again be measured as specified in 4.8.11, unless otherwise specified (see 3.1).

Within twenty-four hours after the test, the switches shall be examined for evidence of corrosion, breaking, cracking, spalling, or loosening of terminals. A movement of the terminal within the confines of the terminal anchoring device will be permitted provided continuity of electrical contact is not impaired. Mounting and terminal hardware shall be removable at the end of the test.

4.8.3 Salt spray (corrosion) (see 3.6.3). Switches with their mounting hardware, assembled with their mounting means, shall be tested in accordance with method 101 of MIL-STD-202. The following details shall apply:

a. Test condition – B

b. Measurements after exposure – Not applicable.

After the test, switches shall be examined for evidence of excessive corrosion. Mounting and terminal hardware shall be removable at the end of the test.

4.8.4 Vibration. Switches shall be tested in accordance with MIL-STD-167-1, type I. The following details and exceptions shall apply:

a. Test and measurements prior to vibration – Not applicable

b. Method of mounting – Switches shall be rigidly mounted by their normal mounting means. The mounting fixture shall be free from resonance over the test frequency range. Rear support shall be provided with switches having 10 or more decks, including blank decks.

c. Direction of motion – One of the directions of vibration shall be in a plane perpendicular to the longitudinal axis of the switch.

d. Electrical test conditions – The test circuit shall be in accordance with method 310 of MIL-STD-202, and shall consist of all closed mated contacts in an ON switch position At the option of the manufacturer, contacts may be wired in series.

e. Test measurements during vibration – Contacts shall be monitored for opening.

f. Measurements after vibration – Not applicable

g. Examination after test – Switches shall be examined for change in shaft position, and evidence of broken, loose, deformed, or displaced parts.

4.8.5 High-impact shock. High-impact shock tests shall be conducted in accordance with MIL-S-901 for grade A, class I equipment (see 3.6.5). Rear support shall be provided with switches having 10 or more decks, including blank decks. The switch shall be energized in an operating position at rated voltage. The coil of a relay calibrated for the rated voltage of the switch being tested and having a drop-out time of 0.02 second, shall be connected in series with the energized contacts of the switch to determine conformance with 3.6.5. An alternate monitoring method using a calibrated timing device and a supervisory test current similar to method 310 of MIL-STD-202 may be substituted for the calibrated relay method. A latching type circuit shall be connected to an energized normally open contact during the MIL-S-901 testing. The latching of this circuit will indicate that the contact is momentarily closed.

4.8.6 Dielectric withstanding voltage (see 3.6.6 and 6.2). The switch shall be tested in accordance with method 301 of MIL-STD-202. The following details shall apply:

a. For switches rated at 125 volts ac (Vac), the test voltage shall be 1250 volts root means square (rms). For switches rated at 500 Vac the test voltage shall be 2000 volts rms.

b. For group A inspection, the test voltage shall be applied for 5 seconds. For qualification and groups B and C inspections, the test voltage shall be applied for 1 minute.

c. In each switch position, the test voltage shall be applied between open circuits contacts, and between closed contacts and noncurrent carrying parts.

4.8.7 Overload. The switches shall be operated for 50 operations to interrupt 600 percent of the rated alternating current at the rated voltage. The circuit shall provide for ON-OFF switching and one operation shall consist of throwing the switch from the OFF to the ON position and returning to the OFF position. The test rate shall be 2 operations per minute and the duty cycle shall be 50 percent ON and 50 percent OFF (applicable to 1SR and 3SR only).

4.8.8 Contact resistance. Contact resistance between the stationary contacts which have been energized for the endurance tests (see 4.8.10), shall be determined in accordance with method 307 of MIL-STD-202, and the exceptions listed herein. The following details shall apply:

a. Test leads shall be connected by a method suitable for the switch terminals.

b. Test current and voltage shall be the rated current and voltage energizing the switch during the endurance tests (see tables X and XI).

c. Prior to each measurement, the switch shall be operated once.

d. Five separate measurements shall be taken at each interval and the average value calculated.

e. The contact resistance shall be determined prior to the endurance tests, and during the endurance tests at intervals of : 5000 operations for classes 1SR and 1SRN, 4000 operations for class 3SR and at 1000 operations for classes 6SR and 20SR.

4.8.9 Temperature rise. The temperature rise of the switch stationary contacts energized during the electrical endurance tests shall be determined by means of thermocouples of small wire gauge (28-32 AWG). The temperature sensitive elements shall be placed on the contacts where they first emerge from the switch body. Temperature measurements shall be taken prior to and immediately following the electrical endurance test. The contacts shall be energized at rated current at any convenient voltage within the switch rating. Temperature measurements shall be taken at half-hour intervals until three successive measurements are within plus or minus 1 °C.

4.8.10 Endurance.

4.8.10.1 Alternating current. Referring to the columnar headings of table X, the switch shall make, break, and carry (a) amperes at (b) volts at unity power factor for a total of (c) operations (see 6.2). The rate of testing shall not exceed (d) operations per minute. An operation is defined as one make and one break, of the same switch contact and the number of operations is determined by the contact either movable or stationary which is subjected to the largest number of makes and breaks. Following this, the switch shall be de-energized and operated for additional (e) operations. The duty cycle shall be 50 percent ON and 50 percent OFF.

TABLE X. *AC endurance.*

Switch class	(a) Current (amperes rms)	(b) Voltage (volts rms)	(c) Electrical operations (number of operations)	(d) Test rate (operations per minute)	(e) De-energized operations (number of operations)
1SR	10	125	30,000	30	20,000
1SRN	10	125	20,000	30	10,000
3SR	30	500	20,000	30	10,000
6SR	60	500	6,000	10	4,000
20SR	200	500	6,000	8	4,000

4.8.10.1.1 Test wiring. The test wiring for qualification testing shall be in accordance with figure 1 (see 6.2) For tests involving type designations other than the SR3B, the wiring for qualification testing shall simulate an intended switch application

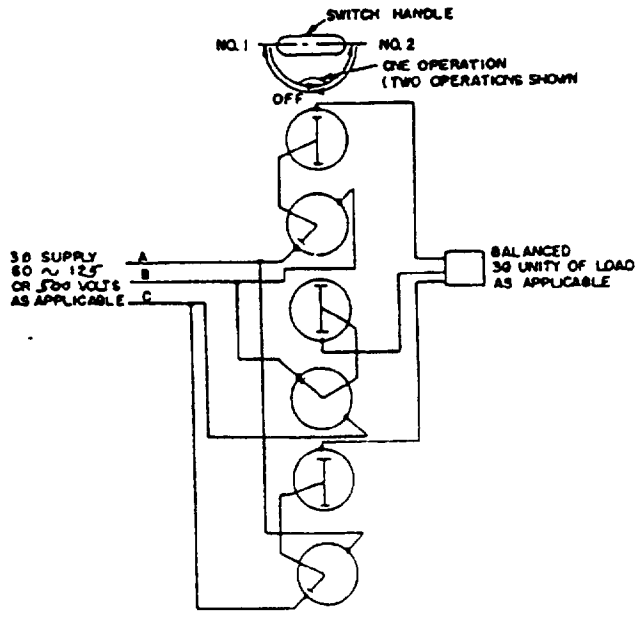

SH4456

Figure 1 *Test wiring for ac endurance testing of switches, type designation SR3B*

4.8.10.2 Direct current. Referring to the columnar headings of table XI, the switch shall make, break, and carry (a) amperes at (b) volts for a total of (c) operations (see 6.2). An operation is specified in 4.8.10.1. The rate of testing shall not exceed (d) operations per minute. The test loading shall be nominally resistive. The duty cycle shall be 50 percent ON and 50 percent OFF The test wiring for qualification testing for other than switching characteristic A, shall be in accordance with figure 2. Test wiring for other switching characteristics shall simulate intended switch applications (see 3.1) Direct current endurance tests are required for class SR (snap action) switches only.

TABLE XI. *DC endurance*

Switch class	(a) Current (amperes)	(b) Voltage (volts)	(c) Electrical operations (number of operations)	(d) Test rate (operations per minute)
1SR	10	120	20,000	15
3SR	30	250	15,000	15
6SR	60	250	4,000	5
20SR	200	250	4,000	3

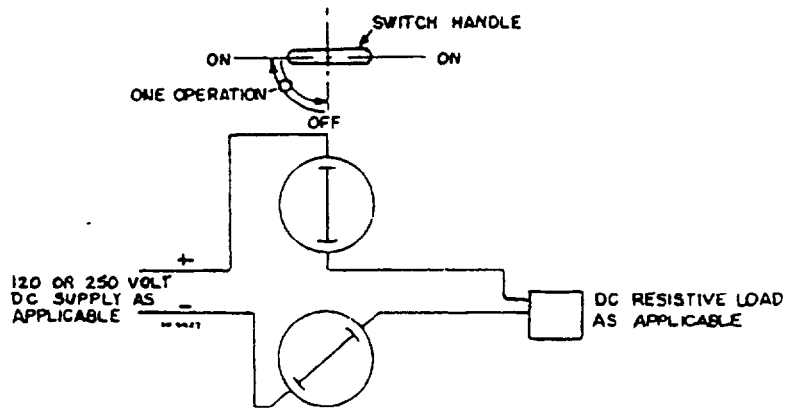

FIGURE 2 *Test wiring for dc endurance testing of switches, type designation SR3A, characteristic A*

4.8.11 Insulation resistance. The switch shall be tested in accordance with method 302 of MIL-STD-202 The following details shall apply:

a Test condition B shall be used.

b. In each switch position, the test voltage shall be applied between open circuit contacts, and between closed contacts and noncurrent carrying parts.

c. Test potential shall be applied for one minute.

d. The test shall be conducted at a room temperature of approximately 75 degrees Fahrenheit (°F), and at a relative humidity of approximately 50 percent

4.9 Packaging inspection. Sample packages and packs, and the inspection of the preservation, packing, and marking for shipment, stowage, and storage shall be in accordance with the requirements of section 5 and the documents specified therein.

5. PACKAGING

(The packaging requirements specified herein apply only for direct Government acquisition For the extent of applicability of the packaging or preparation for delivery requirements of referenced documents listed in section 2, see 6 9.)

5.1 Packaging requirements. The packaging (preservation, packing and marking) requirements shall be in accordance with MIL-E-17555 for the level of preservation, the level of packing, including marking and packaging acquisitioning option therein, as specified (see 6.2). In addition, for Navy acquisitions, the following applies:

a. Navy fire-retardant requirements.

(1) Lumber and plywood. Unless otherwise specified (see 6.2), all lumber and plywood including laminated veneer material used in shipping container and pallet construction, members, blocking, bracing, and reinforcing shall be fire-retardant treated materials conforming to MIL-L-19140 as follows:

Level A and B - Type II - Weather resistant
Category 1 - General use

Level C - Type I - Non-weather resistant
Category 1 - General use

(2) Fiberboard Fiberboard used in the construction of interior (unit and intermediate) and exterior boxes including interior packaging forms shall conform to the class-domestic/fire retardant or class-weather resistant/fire retardant materials requirements as specified (see 6.2) of PPP-F-320.

6. NOTES

(This section contains information of a general or explanatory nature that may be helpful, but is not mandatory.)

6.1 Intended use. The switches covered by this specification are intended for use in power and control equipment where reliability and ruggedness are required.

6.1.1 Voltage and current ratings. The voltage and current ratings specified in table I are applicable for the number of operations indicated in tables X and XI. Other current and voltage ratings are possible where the switch will be subjected to fewer operations. Such ratings based on test data are listed as extended ratings in the specification sheets (see 3.1). The extended ratings are applicable to snap action switches only.

6.2 Acquisition requirements. Acquisition documents must specify the following:

a. Title, number, and date of this specification

b. Issue of DODISS to be cited in the solicitation, and if required, the specific issue of individual documents referenced (see 2.1.1 and 2.2)

c. Kit for panel seal mounting (see 3.1)

d PINs of switches to be acquired (see 3.3.1)

e Applicable complimentary documents (see 3 3.2)

f. Inspection requirements if other than as specified (see 3.3.2)

g Materials, if other than as specified (see 3.4)

h Insulation, if other than as specified (see 3.4.2.1)

i Design, class and construction (see 3.5)

j Threaded parts, if other than as specified (see 3.5.4)

k Terminal hardware (see 3.5.6)

l Handles (see 3.5.10)

m. Whether stops are required and their positions (see 3.6.1.2)

n Marking (see 3 7)

o Inspection for switches not covered by inspection sheets·

(1) The laboratory at which inspection is to be performed (see 4.4.3)

(2) Samples, submission of data, and test routine, if other than as specified (see 4 4.3 1)

p Dielectric withstanding voltage Test voltage, if other than as specified (see 4.8.6)

q. Circuit configuration and diagrams to be used for specifying the circuit configuration for each switch section (see 4.8.10.1.1)
r Endurance, if other than as specified (see 4 8.10 1 and 4.8.10.2)
s. Level of preservation, level of packing, and other packaging options required (see 5.1)
t. When fire retardant lumber and plywood is not required (see 5.1a(1)).
u. Class of fire retardant firberboard required (see 5.1.a(2)).

6.3 Consideration of data requirements. The following data requirements should be considered when this specification is applied on a contract The applicable Data Item Descriptions (DIDs) should be reviewed in conjunction with the specific acquisition to ensure that only essential data are requested/provided and that the DIDs are tailored to reflect the requirements of the specific acquisition. To ensure correct contractual application of the data requirements, a Contract Data Requirements List (DD Form 1423) must be prepared to obtain the data, except where DOD FAR Supplement 27.475-1 exempts the requirement for a DD Form 1423.

Reference Paragraph	DID Number	DID Title	Suggested Tailoring
4.1.1	UDI-T-23741	Report, Material Inspection System	–
4.1.1	DI-CMAN-80787	Special Inspection Equipment Calibration Procedures	–
4.5.1	DI-T-2072	Reports, Test	Option 10

The above DIDs were those cleared as of the date of this specification. The current issue of DOD 5010.12-L, Acquisition Management Systems and Data Requirements Control List (AMSDL), must be researched to ensure that only current, cleared DIDs are cited on the DD Form 1423.

6.4 Switch wiring. Wiring connected to switch terminals should be formed to the switches and secured as necessary to minimize strain exerted on the terminals and to provide flexibility suitable for the shock and vibration conditions of the installation. Excessive strain may cause displacement of the contacting tips of the terminals, resulting in poor contact and excessive heating

6.5 Switch exercising. Switches that are operated infrequently in normal service should be exercised periodically or when opportunity permits in order to retard drying of the contact lubricant and consequent increase in contact resistance.

6.6 Qualification. With respect to products requiring qualification, awards will be made only for products which are, at the time of award of contract, qualified for inclusion in Qualified Products List QPL No. 15291 whether or not such products have actually been so listed by that date The attention of the contractors is called to these requirements, and manufacturers are urged to arrange to have the products that they propose to offer to the Federal Government tested for qualification in order that they may be eligible to be awarded contracts or purchase orders for

the products covered by this specification The activity responsible for the Qualified Products List is the Naval Sea Systems Command, SEA 55Z3, Department of the Navy, Washington, DC 20362-5101 and information pertaining to qualification of products may be obtained from that activity.

6.7 Type designations. Type designations assigned in previous issues of this specification are cross referenced to superseding PINs in the specification sheets (see 3.1 and 6.7) The type designations are in the following form and have the significance indicated.

SR	N	1	B	4	A
Class (1.2)	Positioning mechanism (1.2.1)	Poles (6.7.1)	Switching characteristic (6.7.2)	Mounting connection and handle arrangement (6.7.3)	Variation symbol (6 7 4)

6.7.1 Poles. The number of poles are identified by a number equal to the number of single circuits simultaneously controlled by the switch. The symbol "S" should be substituted for the digit when the switch has a special switching characteristic (see 6.7.2).

6.7.2 Switching characteristic. The switching characteristics are identified by a one-letter symbol describing the electrical changing characteristic for a typical pole of the switch in accordance with table XII

TABLE XII. *Switching characteristics*

Characteristic symbol	Operation (C indicates common)	Handle position (see 3.1) Typical schematic [1]
A	off-on-off-on (single-throw)	
B	off-on 1 off-on 2 (double throw)	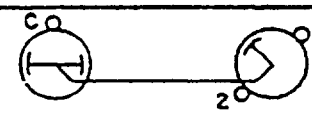
C	on 1-on 2-on 1-on 2 (double throw)	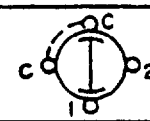
D	on 1-on 2-off-off (double throw)	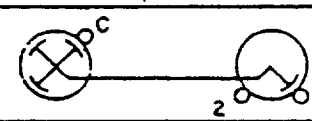
E	off-on 1-on 2-on 3 (triple throw)	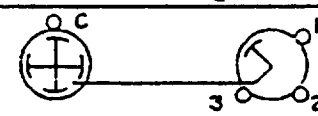
F	off-on 1-on 1 & 2-on 2 (triple throw)	
G	on 1-on 2-on 3-on 4 (four throw)	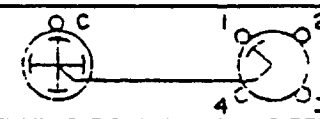
H	on 1-off-on 2 (double throw)	
J	on 1-on 2-on 1-on 2 (double throw)	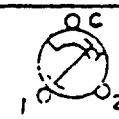
S	Special (other than the above or combinations)	

[1]Terminal numbers shown do not necessarily correspond to actual configurations

6.7.3 Mounting, connection, and handle arrangement. The type of mounting, the method of wiring stationary contacts, and the handle or shaft arrangement should be identified by a one-digit symbol in accordance with the following:

1. Front mounted-back connected-handle supplied with switch
2. Front mounted-side connected-handle supplied with switch
3. Base mounted-side connected-shaft designed for handle, handle not supplied
4. Base mounted-side connected-shaft designed for coupling to external shaft

6.7.4 Variation symbol. The variation symbol should start with the letter A and continue alphabetically. It should be used to differentiate switches having the same type designation but varying in either mechanical or electrical characteristics.

6.8 Part or identifying number (PIN). The PIN to be used for switches acquired to this specification is created as follows:

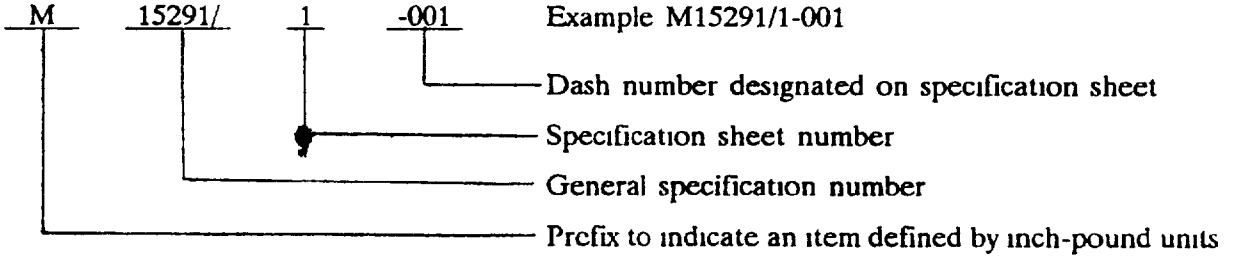

6.9 Sub-contracted material and parts. The packaging or preparation for delivery requirements of referenced documents listed in section 2 do not apply when material and parts are acquired by the contractor for incorporation into the equipment and lose their separate identity when the equipment is shipped

6.10 Changes from previous issue. Marginal notations are not used in this revision to identify changes with respect to the previous issue, due to the extensiveness of the changes

Preparing activity:
Navy - SH
(Project 5930-N663-1)