INCH-POUND

MIL-S-15291/7A(SH)
22 July 1991
SUPERCEDING
MIL-S-15291/7(SH)
17 April 1981

MILITARY SPECIFICATION SHEET

SWITCHES, ROTARY, SNAP ACTION CLASS 3SR BASE MOUNTED, SIDE CONNECTED

This specification is approved for use by the Naval Sea Systems Command, Department of the Navy, and is available for use by all Departments and Agencies of the Department of Defense

The requirements for acquiring the product described herein shall consist of this specification sheet and the issue of the following specification listed in that issue of the Department of Defense Index of Specifications and Standards (DODISS) specified in the solicitation. MIL-S-15291.

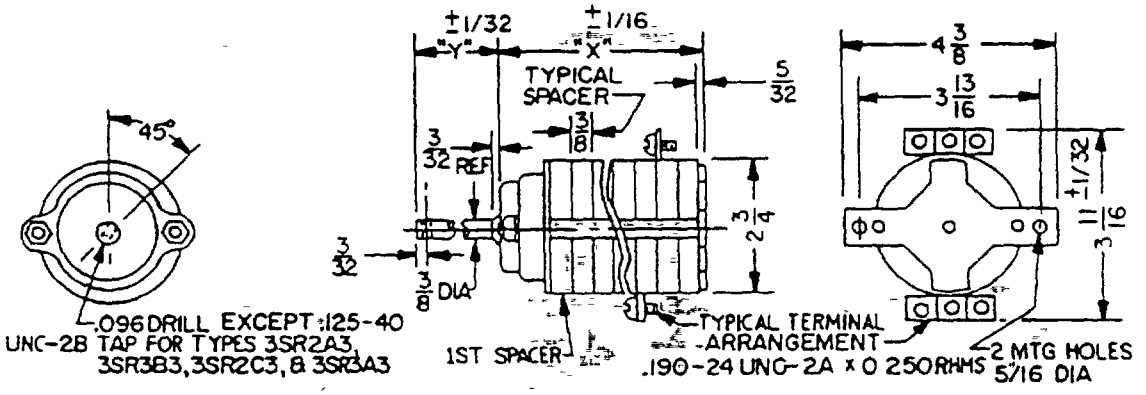

NOTES
1 Dimensions are in inches
2 Unless otherwise specified, tolerance is plus or minus 0.015

FIGURE 1. *Base mounted, side connected*

AMSC N/A FSC 5930

DISTRIBUTION STATEMENT A. Approved for public release, distribution is unlimited

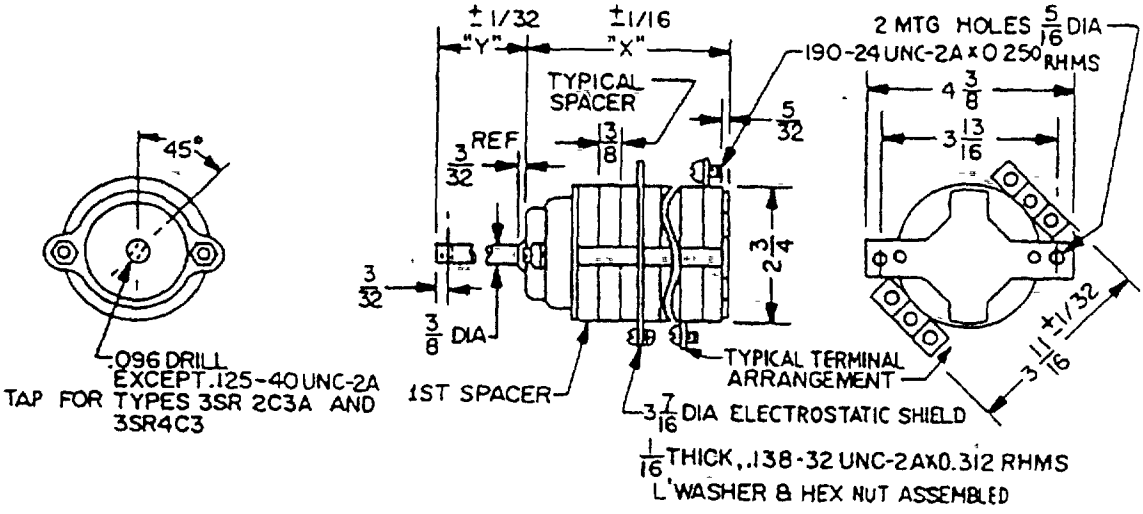

FIGURE 2. *Base mounted, side connected, with electrostatic shield*

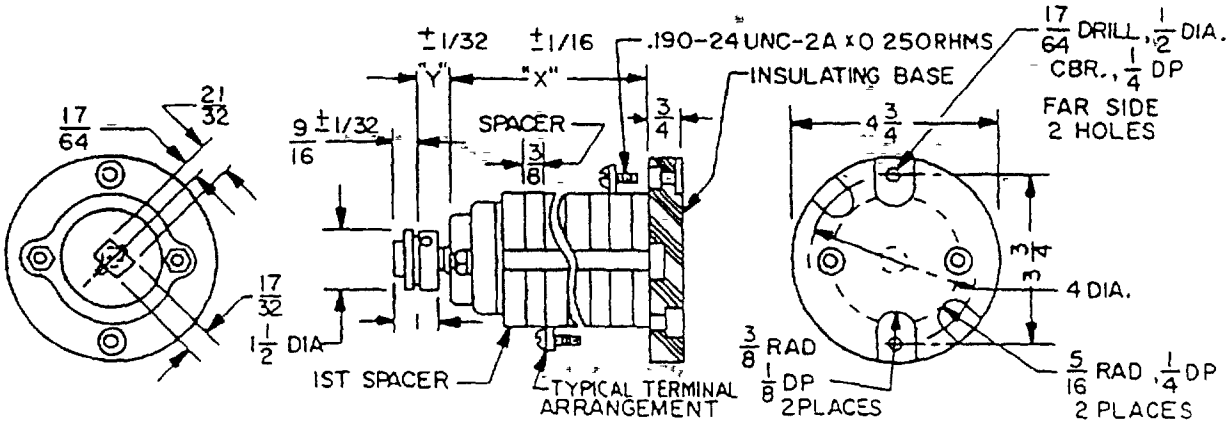

FIGURE 3 *Side connected, with insulated base mounting*

TABLE I. *Type and switching characteristics.*

MIL5291/7 Dash No Type designation	Detail ref / Torque in-lbs	Dim "X" / Dim "Y"	Handle or shaft position	Circuit and spacer configuration rotor position, spacer locations, terminal marking and locations													Notes
				No 1	No 2	No 3	No 4	No 5	No 6	No 7	No 8	No 9	No 10	No. 11	No 12	No 13	
-001	Fig 1	$2\frac{7}{8}$	ON OFF / OFF ON			1 2	3 4										
3SR2A3	9	$1\frac{9}{16}$															
-002	Fig 1	$2\frac{7}{8}$	ON OFF / OFF ON			1 2	3 4										
3SR2A4	9	$\frac{9}{16}$															
-003	Fig 3	$3\frac{15}{32}$	ON OFF / OFF ON			1 2				3 4							
3SR2A4A	9	$\frac{9}{16}$															
-004	Fig 1	$3\frac{1}{4}$	ON OFF / OFF ON		1 2	3 4	5 6										
3SR3A3	9	$1\frac{9}{16}$															
-005	Fig 1	$2\frac{1}{2}$	ON OFF / OFF ON		1 2	3 4	5 6										
3SR3A4	9	$\frac{9}{16}$															
-006	Fig 1	$3\frac{5}{8}$	ON OFF / OFF ON		1 2	3 4	5 6	7 8	9 10	11 12							
	9	$\frac{9}{16}$															
-007	Fig 1	$2\frac{7}{8}$	OFF ON / OFF ON 2		1 2	3	4	5 6									
3SR2B4	9	$\frac{9}{16}$															
-008	Fig 1	$4\frac{3}{8}$	ON 1 OFF / OFF ON 2			1	2 3	4 5	6	7	8 9						
3SR3B3	9	$1\frac{9}{16}$															
-009	Fig 1	$3\frac{5}{8}$	ON 1 OFF / OFF ON 2		1	2 3	4 5	6	7	8 9							
3SR3B4	9	$\frac{9}{16}$															

TABLE I. *Type and switching characteristics – Continued*

MI5291/7 Dash No Type designation	Detail ref / Torque in-lbs	Dim "X" / Dim "Y"	Handle or shaft	Circuit and spacer configuration rotor position, spacer locations, terminal marking and locations													Notes
				No 1	No 2	No 3	No 4	No 5	No 6	No 7	No 8	No 9	No 10	No 11	No 12	No 13	
-010	Fig 1	$4\frac{3}{8}$	ON 1 OFF														
3SR4B4	9	$\frac{9}{16}$	OFF ON 2														
-011	Fig 1	$3\frac{5}{8}$	ON 2 ON 1														[1]
3SR2C3	9	$1\frac{9}{16}$	ON 1 ON 2														
-012	Fig 1	$2\frac{7}{8}$	ON 1 ON 2														[1]
3SR2C4	9	$\frac{9}{16}$	ON 2 ON 1														
-013	Fig 2	$2\frac{9}{16}$	ON 1 ON 2			SHIELD											[1]
3SR2C4A	9	$\frac{9}{16}$	ON 2 ON 1														
-014	Fig 2	$3\frac{1}{4}$	ON 1 ON 2														[1]
3SR3C3	9	$1\frac{3}{16}$	ON 2 ON 1														
-015	Fig 2	$3\frac{5}{16}$	ON 1 ON 2				Shield										[1]
3SR4C4	9	$\frac{9}{16}$	ON 2 ON 1														
-016	Fig 1	$4\frac{3}{4}$	ON 1 ON 2														[1]
3SR5C4	9	$\frac{9}{16}$	ON 2 ON 1														
-017	Fig 1	$4\frac{3}{8}$	ON 1 ON 2														[1]
3SR4D4	9	$\frac{9}{16}$	OFF OFF														
-018	Fig 1	$3\frac{1}{4}$	4 1														[1]
3SR7S4	9	$\frac{9}{16}$	3 4														

[1] External connectors shown on -011 through -016 are not supplied

REQUIREMENTS:

Applicable specification:	MIL-S-15291
Dimensions and mounting:	See figures 1 through 3
Switching characteristics.	See table I
Angle of throw:	90 degrees
Switching action:	Snap action, reciprocating
Electrical and endurance ratings	See table II
Stop strength (applicable to switches with stops):	100 inch-pounds
Vibration:	50 Hz, MIL-STD-167-1
Shock:	High impact, MIL-S-901
Insulation:	Glass alkyd, MAI-60 (or MAI-30) per MIL-M-14
Overload:	600 percent of ac rating, 50 make and break operations
Contact resistance:	0.01 ohms maximum
Dielectric withstanding voltage	2,000 Vrms
Insulation resistance:	200 megohms minimum
Temperature rise:	50 °C maximum
Contact material:	Rotor, phosphor bronze – Stationary contact, copper
Mounting screws.	.250-20UNC-2A (4) length and headstyle to suit application. Screws not furnished.

TABLE II *Electrical and endurance ratings*

Tests	Current (amperes)	Voltage (volts)	Electrical operations (number of operations)	Test rate (operations per minute)	De-energized operations (number of operations)
Alternating current (rms)	30	500	20,000	30	10,000
Direct current	30	250	15,000	15	–

Terminal marking

Terminal markings shown in table I locate terminals as viewed from the front of the switch (handle end) Markings shall be stamped in front surfaces of terminals, clear of the screw heads.

GENERAL INFORMATION:

Switches not covered by specification sheets:

Switches which are fabricated from standard parts, as used in qualified switches, but which do not comply with switches detailed herein with respect to circuit characteristics, switching action, mounting arrangement, and handle details may be acquired under this specification from contractors having qualification approval under this specification.

Extended ratings.

Switches detailed herein have been tested and found satisfactory at the extended ratings listed in table III Reduced life expectancy must be anticipated for switches used at these increased voltage or current levels. Tests under the conditions of table III are not required for qualification acceptance and they are not repeated routinely as for maintenance of qualification. Supplemental evaluations and tests applicable to particular circuit requirements are recommended.

TABLE III *Extended ratings*

Switching characteristics	AC - 60 or 400 cycles											
	125 volts				250 volts				500 volts			
	Resistive or lamp load		Inductive load 0.75 p.f.		Resistive or lamp load		Inductive load 0.75 p.f.		Resistive or lamp load		Inductive load 0.75 p.f.	
	Amp.	Operations	Amp.	Operations	Amp.	Operations	Amp.	Operations	Amp.	Operations	Amp.	Operations
All	30	20,000	30	20,000	30	20,000	30	20,000	30	20,000	30	20,000
C,D	40	6,000	40	6,000	---	---	---	---	---	---	---	---
A,B [1]	40	6,000	30	6,000	30	6,000	30	6,000	30	6,000	30	6,000
	DC											
	120 volts				250 volts				350 volts			
	Resistive or lamp load		Inductive load [2]		Resistive or lamp load		Inductive load [2]		Resistive or lamp load		Inductive load [2]	
	Amp	Operations	Amp	Operations	Amp.	Operations	Amp.	Operations	Amp	Operations	Amp.	Operations
All	30	13,000	25	6,000	15	13,000	---	---	---	---	---	---
A,B	30	15,000	25	6,000	25	6,000	25	6,000	15	6,000	15	6,000
A,B [3]	---	---	---	---	30	15,000	---	---	---	---	---	---

[1] Single pole break - all other ratings are based on breaking both sides of the line in accordance with figures 1 and 2 of MIL-S 15291

[2] 0.08 henry for inductive circuit

[3] Switch with special arc snuffers

APPLICATION AND ACQUISITION GUIDE: PIN and type designation cross reference shall be as shown in table IV.

TABLE IV *Application and acquisition guide*

M15291/7 dash No	Type designation	For new or existing design	For replacement	Circuit configuration
-001	3SR2A3		X	A (on-off-on-off)
-002	3SR2A4	X		A (on-off-on-off)
-003	3SR2A4A	X		A (on-off-on-off)
-004	3SR3A3		X	A (on-off-on-off)
-005	3SR3A4	X		A (on-off-on-off)
-006	-	X		A (on-off-on-off)
-007	3SR2B4	X		A (off-on 1-off-on 2)
-008	3SR3B3		X	A (off-on 1-off-on 2)
-009	3SR3B4	X		A (off-on 1-off-on 2)
-010	3SR4B4	X		A (off-on 1-off-on 2)
-011	3SR2C3		X	C (on 1-on 2-on 1-on 2)
-012	3SR2C4	X		C (on 1-on 2-on 1-on 2)
-013	3SR2C4A	X		C (on 1-on 2-on 1-on 2)
-014	3SR3C3		X	C (on 1-on 2-on 1-on 2)
-015	3SR4C4	X		C (on 1-on 2-on 1-on 2)
-016	3SR5C4	X		C (on 1-on 2-on 1-on 2)
-017	3SR4D4	X		D (on 1-on 2-off-off)
-018	3SR7S4	X		S (see table I)

Revision letters are not used to denote changes due to the extensiveness of the changes

Preparing activity
Navy - SH
(Project 5930-N663-8)