MILITARY SPECIFICATION SHEET

SYNCHROS, CONTROL TRANSFORMER, TYPE 15CT6B

This specification sheet is approved for use by the Naval Sea Systems Command, Department of the Navy, and is available for use by all Departments and Agencies of the Department of Defense.

The complete requirements for procuring the control transformer synchros described herein shall consist of this document and the latest issue of specification MIL-S-20708.

SPLINE DATA	
TEETH	21
PITCH	12C
PITCH DIAMETER	175 + 000 002
OUTSIDE DIAMETER	187? + 0000 0005
PRESSURE ANGLE	20°
ROOT DIAMETER MAX	135
TOOTH FORM	FULL DEPTH INVOLUTE
NOTE THE END FUNCTION OF THIS SPLINE IS FOR POSITIVE ROTATIONAL FASTENINGS IT IS NOT TO BE USED AS A GEAR THIS SPLINE SHALL BE INSPECTED BY (SPLINE) GO COMPOSITE RING GAGE MS 80408 1	

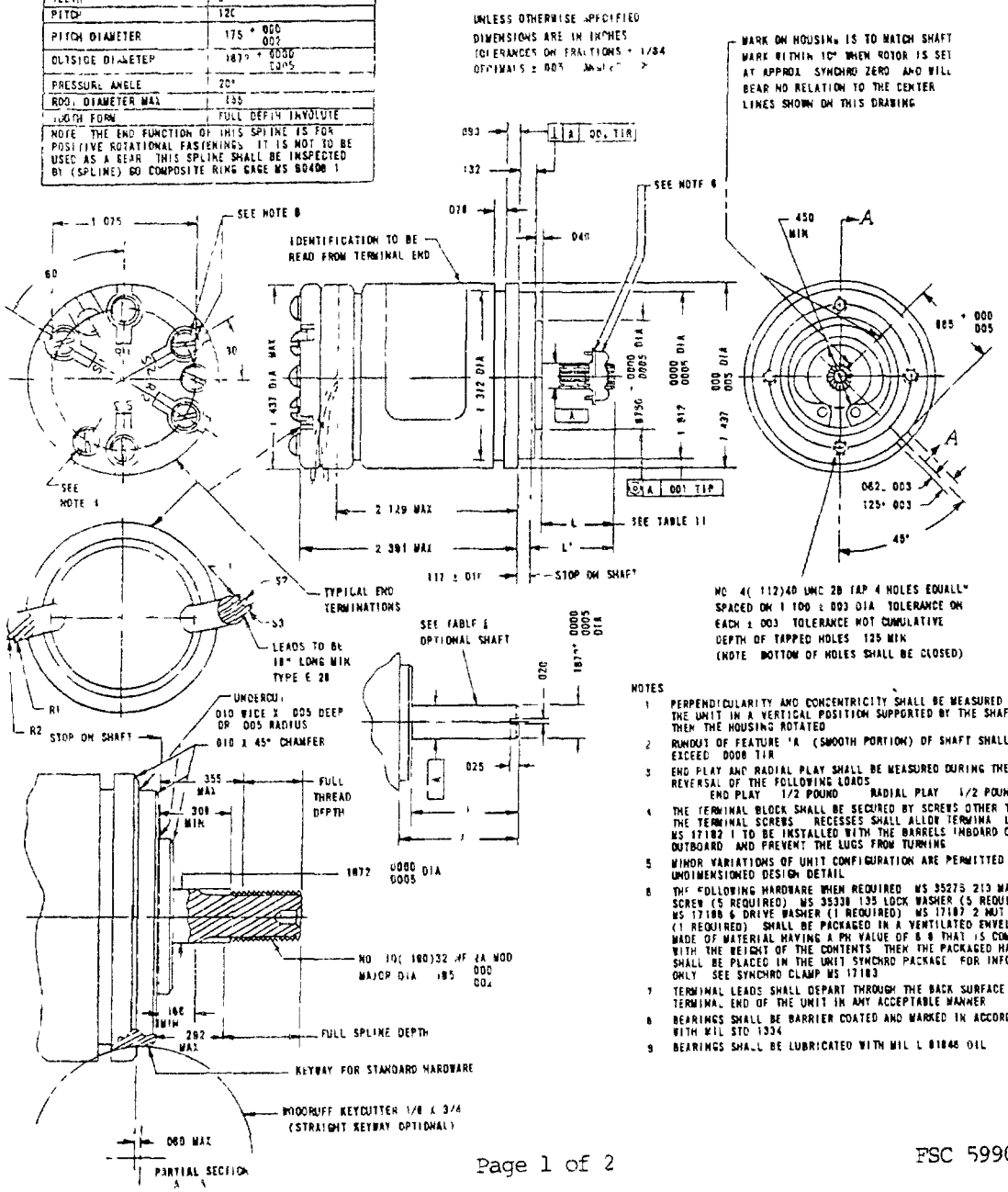

NOTES

1. PERPENDICULARITY AND CONCENTRICITY SHALL BE MEASURED WITH THE UNIT IN A VERTICAL POSITION SUPPORTED BY THE SHAFT THEN THE HOUSING ROTATED
2. RUNOUT OF FEATURE 'A' (SMOOTH PORTION) OF SHAFT SHALL NOT EXCEED .0008 TIR
3. END PLAY AND RADIAL PLAY SHALL BE MEASURED DURING THE REVERSAL OF THE FOLLOWING LOADS END PLAY 1/2 POUND RADIAL PLAY 1/2 POUND
4. THE TERMINAL BLOCK SHALL BE SECURED BY SCREWS OTHER THAN THE TERMINAL SCREWS RECESSES SHALL ALLOW TERMINAL LUGS MS 17182 1 TO BE INSTALLED WITH THE BARRELS INBOARD OR OUTBOARD AND PREVENT THE LUGS FROM TURNING
5. MINOR VARIATIONS OF UNIT CONFIGURATION ARE PERMITTED FOR UNDIMENSIONED DESIGN DETAIL
6. THE FOLLOWING HARDWARE WHEN REQUIRED MS 35275 213 MACHINE SCREW (5 REQUIRED) MS 35338 135 LOCK WASHER (5 REQUIRED) MS 17188 6 DRIVE WASHER (1 REQUIRED) MS 17182 2 NUT (1 REQUIRED) SHALL BE PACKAGED IN A VENTILATED ENVELOPE MADE OF MATERIAL HAVING A PH VALUE OF 6 8 THAT IS COMPATIBLE WITH THE WEIGHT OF THE CONTENTS THEN THE PACKAGED HARDWARE SHALL BE PLACED IN THE UNIT SYNCHRO PACKAGE FOR INFORMATION ONLY SEE SYNCHRO CLAMP MS 17183
7. TERMINAL LEADS SHALL DEPART THROUGH THE BACK SURFACE OF THE TERMINAL END OF THE UNIT IN ANY ACCEPTABLE MANNER
8. BEARINGS SHALL BE BARRIER COATED AND MARKED IN ACCORDANCE WITH MIL STD 1334
9. BEARINGS SHALL BE LUBRICATED WITH MIL L 81846 OIL

FSC 5990

Requirement	Value	Unit	Tolerance
Frequency	60	Hz	±1%
Primary Voltage	90	volts	nominal
Primary Current	20-25	milliamps	min.-max
Primary Power	0.7	watts	maximum
Impedance			
Zso	3611	ohms	nominal
Zrs	1423	ohms	nominal
Impedance Angle			
Zso	70.1	degrees	nominal
Zrs	15.9	degrees	nominal
Transformation Ratio	0.735	-------	±2%
Phase Shift	20.0 (lead)	degrees	±2.0
Electrical Error	6.0	minutes	maximum
Null Voltage			
Total	90.0	millivolts	maximum
Fundamental	60.0	millivolts	maximum
Friction Torque	0.05	ounce-inches	maximum
Radial Play	0.0004	inches	maximum
End Play	0.0015	inches	maximum
Temperature Rise	10.0	degrees (C)	maximum

Part number: M20708/504 plus applicable dash number from Table I.

TABLE I

DASH NO.	SHAFT DIAMETER	SHAFT STYLE	TERMINAL END	L' DIMENSION TO STOP ON SHAFT	L REFERENCE FREE SHAFT LENGTH
-001	.1872	Splined	Terminal Board	.555 ± .010	.500 ± .010
002	.1872	Smooth	Terminal Board	.555 ± .010	.500 ± .010
003	.1872	Smooth	Leads	.555 ± .010	.500 ± .010

NOTES

1. This component used in Surface Missile System (SMS), Missile Fire Control System (MFCS), MK 115

2. This synchro is for replacement purposes only and is not recommended for new design.

Custodian.
Navy-OS

Preparing Activity
Navy-OS

Project Number
5990-N063

STANDARDIZATION DOCUMENT IMPROVEMENT PROPOSAL

OMB Approval
No 22-R255

INSTRUCTIONS The purpose of this form is to solicit beneficial comments which will help achieve procurement of suitable products at reasonable cost and minimum delay or will otherwise enhance use of the document DoD contractors, government activities, or manufacturers/ vendors who are prospective suppliers of the product are invited to submit comments to the government Fold on lines on reverse side, staple in corner, and send to preparing activity Comments submitted on this form do not constitute or imply authorization to waive any portion of the referenced document(s) or to amend contractual requirements Attach any pertinent data which may be of use in improving this document If there are additional papers, attach to form and place both in an envelope addressed to preparing activity

DOCUMENT IDENTIFIER AND TITLE
MIL-S-20708/504(OS), Synchros, Control Transformer, Type 15CT6B

NAME OF ORGANIZATION AND ADDRESS

CONTRACT NUMBER

MATERIAL PROCURED UNDER A

☐ DIRECT GOVERNMENT CONTRACT ☐ SUBCONTRACT

1 HAS ANY PART OF THE DOCUMENT CREATED PROBLEMS OR REQUIRED INTERPRETATION IN PROCUREMENT USE?

A GIVE PARAGRAPH NO. SEC AND WORDING

B RECOMMENDATIONS FOR CORRECTING THE DEFICIENCIES

2 COMMENTS ON ANY DOCUMENT REQUIREMENT CONSIDERED TOO RIGID

3 IS THE DOCUMENT RESTRICTIVE?

☐ YES ☐ NO (If "Yes", in what way?)

4 REMARKS

SUBMITTED BY (Printed or typed name and address - Optional)

TELEPHONE NO

DATE

DD FORM 1 JAN 72 1426

REPLACES EDITION OF 1 JAN 68 WHICH MAY BE USED

S/N 0102-014-1802

☆ U.S. GOVERNMENT PRINTING OFFICE 1972—714 863/3404 2-1

FOLD

POSTAGE AND FEES PAID

U.S.MAIL

OFFICIAL BUSINESS
PENALTY FOR PRIVATE USE $300

Commander
Naval Sea Systems Command
Engineering Support Division
ATTN. SEA 605
Department of the Navy
Washington, DC 20360

FOLD