MILITARY SPECIFICATION SHEET

SWITCH, STEPPING, 7 LEVEL

This specification sheet is approved for use by the Naval Air Systems Command, Department of the Navy, and is available for use by all Departments and Agencies of the Department of Defense.

The complete requirements for procuring the Switch described herein shall consist of this document and the latest issue of Specification MIL-S-85242.

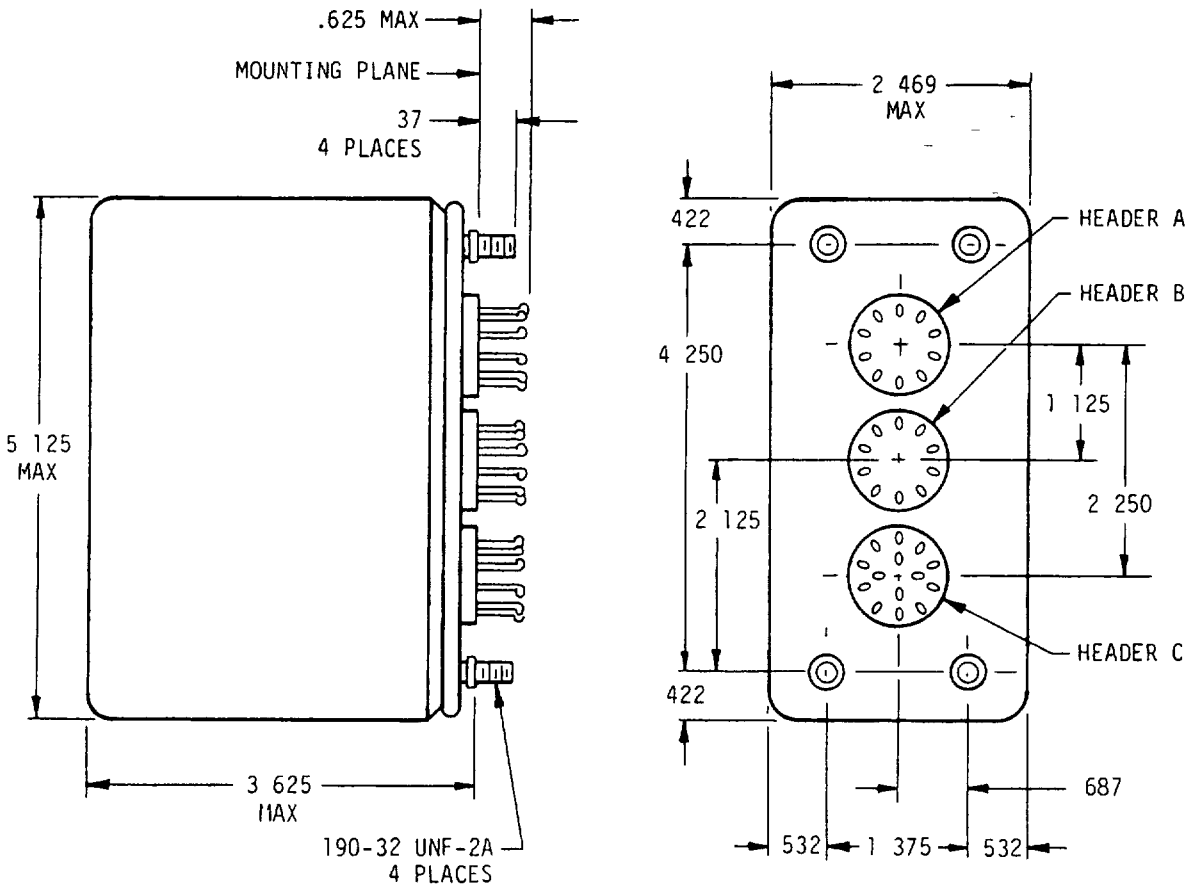

FIGURE 1. Switch.

CHES	mm	INCHES	mm	INCHES	mm
03	.08	.375	9.53	1.190	30.23
04	.10	.422	10.70	1.375	34.93
05	.13	.500	12.70	1.500	38.10
06	.18	.532	13.21	2.120	53.85
10	.25	.562	14.29	2.125	53.98
50	1.27	.620	15.75	2.250	57.15
50	1.80	.625	15.88	2.469	62.61
20	3.05	.687	17.46	3.625	82.08
90	4.83	.690	17.53	4.250	107.95
34	5.95	.812	20.64	5.125	130.18
50	6.35	1.000	25.40	8.000	203.20
10	7.87	1.125	28.58	9.000	228.60

TES:

1. DIMENSIONS ARE IN INCHES.

2. REMOVE BURRS AND BREAK ALL SHARP EDGES .05R MAX

3. METRIC EQUIVALENTS ARE GIVEN FOR GENERAL INFORMATION ONLY AND ARE BASED UPON 1 INCH = 25.4 mm.

4. UNLESS OTHERWISE SPECIFIED, TOLERANCES 3 PLACE DECIMALS $\pm$ .010, 2 PLACE DECIMALS $\pm$ .03, ANGLES $\pm$ 0° 30'

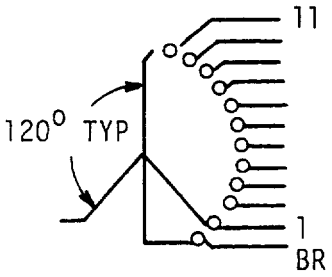

TYPICAL BANK SWITCH
SHOWN IN POSITION 1

INTERRUPTER CONTACTS

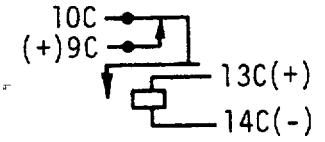

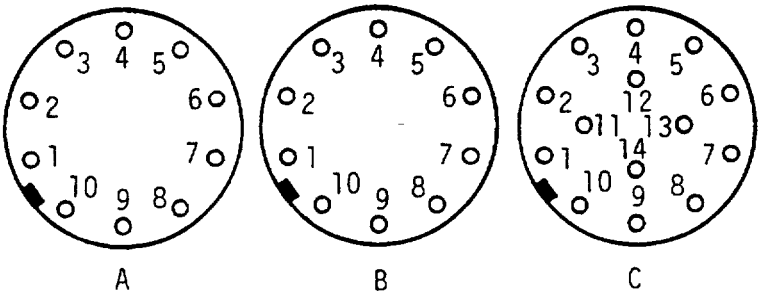

HEADERS

LEVEL	BANK TERMINAL POSITION											
	BR	1	2	3	4	5	6	7	8	9	10	11
	HEADER TERMINAL CONNECTION											
1	2C	3C	4C	5C	6C	7C	8C					
2												
3	5B	6B	7B	8B	9B	10B	1C					
4												
5	2B	3B			4B							
6	4A	5A	6A	7A	8A	9A	10A	1B	11C			
7	1A	2A	3A						12C			

●—● INDICATES INTERNAL STRAPPING

NOTES:

1. THE INFORMATION SHOWN SHALL BE CLEARLY MARKED ON THE OUTSIDE OF THE CASE.

2. INTERNAL STRAPPING SHALL BE AS SHOWN.

FIGURE 2. Wiring schematic and terminal identification.

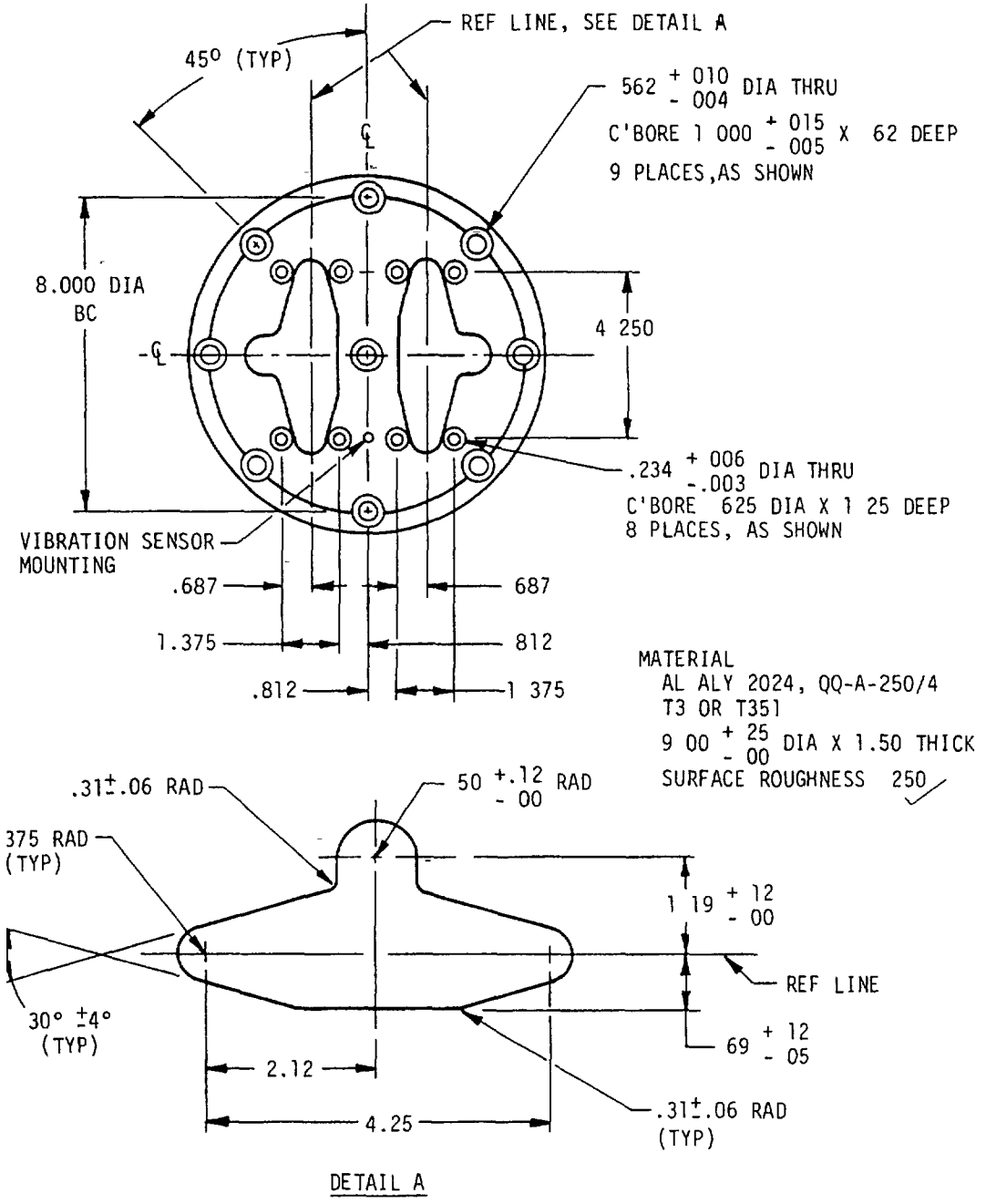

FIGURE 3. Stepping switch mounting plate - vibration/shock.

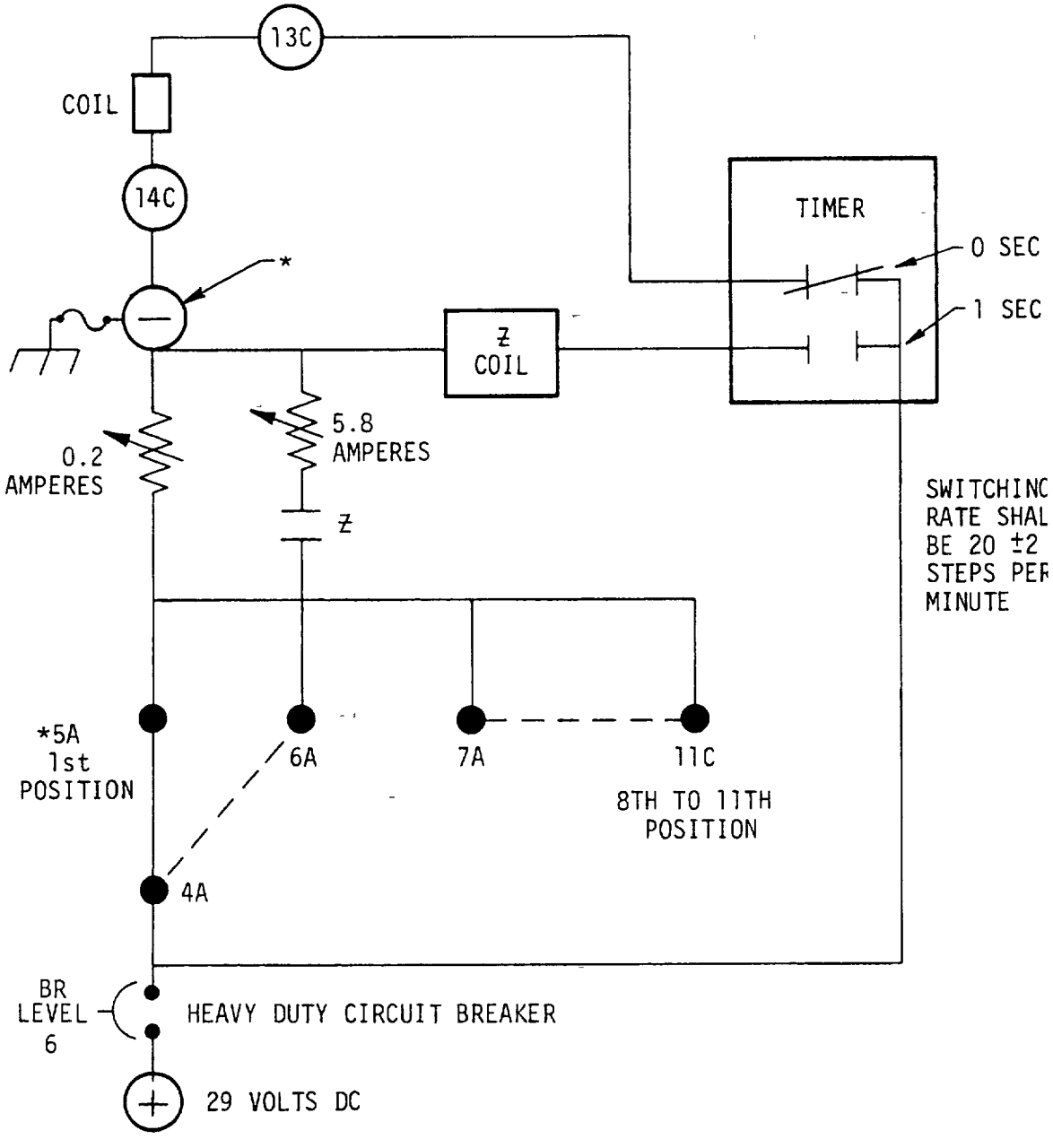

EX.	SINGLE CONTACTS	-	0.2 AMPS	=	145 OHMS
		-	5.8 AMPS	=	5 OHMS
	PARALLEL CONTACTS	-	0.4 AMPS	=	72.5 OHMS
		-	11.6 AMPS	=	2.5 OHMS

* NON-INDUCTIVE HIGH IMPEDANCE COUNTER ACROSS TERMINALS 5A AND MINUS.

** FUSE FROM CASE TO SYSTEM GROUND

FIGURE 4. Typical overload cycling test set up.

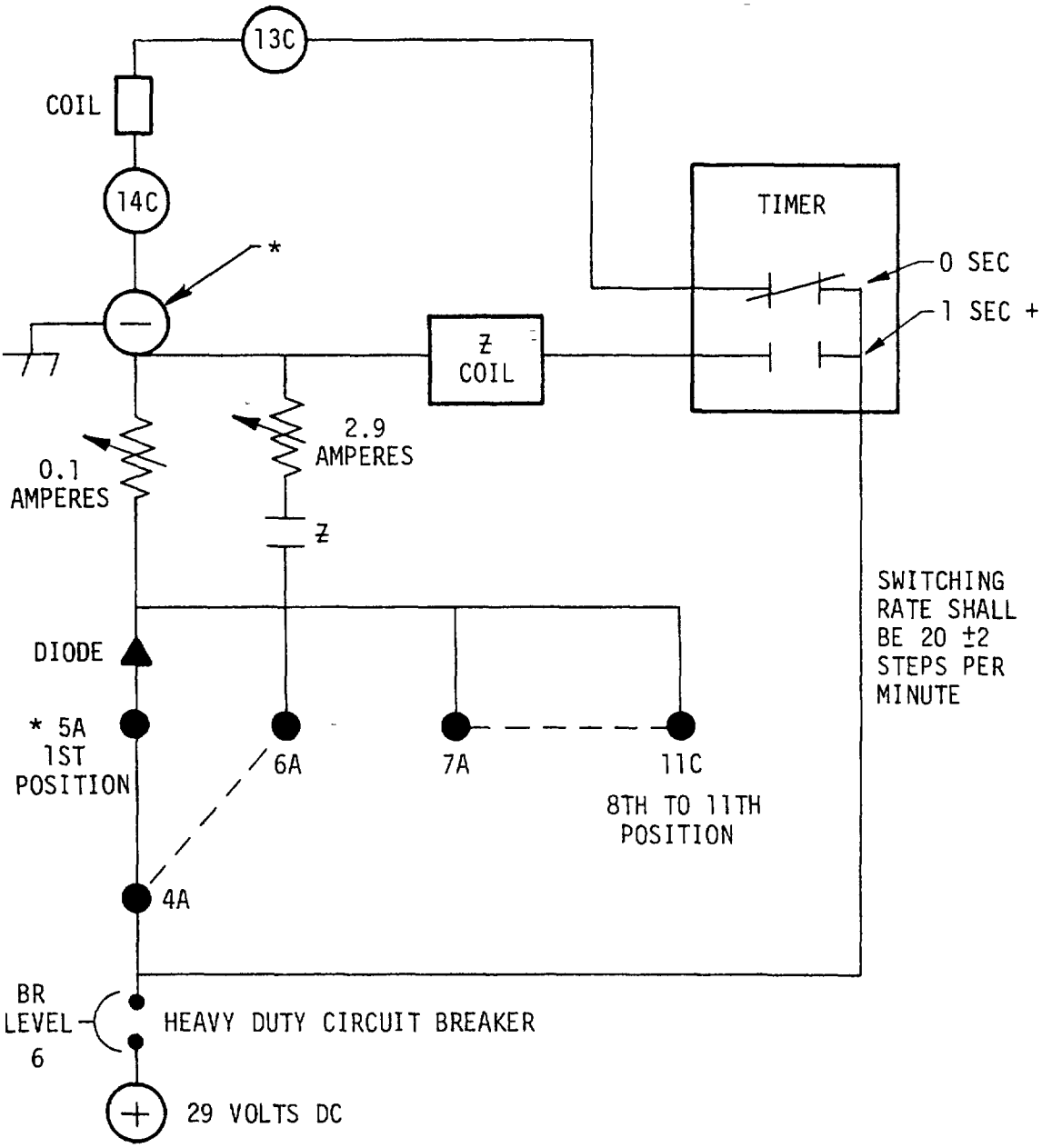

EX: SINGLE CONTACTS -0.1 AMPS = 290 OHMS
-2.9 AMPS = 10 OHMS
PARALLEL CONTACTS -0.2 AMPS = 145 OHMS
-5.8 AMPS = 5 OHMS

* NON-INDUCTIVE HIGH IMPEDANCE COUNTER ACROSS TERMINALS 5A AND MINUS.

FIGURE 5. Typical full load cycling test set up.

REQUIREMENTS·

1. ENCLOSURE DESIGN· (HERMETIC SEAL).

2. TEMPERATURE CHARACTERISTIC: (-55 TO +85°)

3. VIBRATION· THE SWITCH SHALL BE MOUNTED ON THE MOUNTING PLATE SENSORS LOCATED IN ACCORDANCE WITH FIGURE 3 DURING VIBRATION TESTING.

4. INTERRUPTER CONTACTS: SPST NORMALLY CLOSED (SEE FIG 2).

5. WIPER CONTACTS:

   (a) LEVELS 1, 2, 3 and 4 ARE NON-BRIDGING TYPE
   (b) LEVELS 1 to 2 and 3 to 4 ARE RESPECTIVELY PARALLELED
   (c) LEVELS 5, 6 and 7 ARE BRIDGING TYPE

6. NOMINAL COIL VOLTAGE: 24 V DC. OPERATING RANGE, 21 to 29 V D

7. NOMINAL COIL CURRENT: 0.88 AMPERES

8. WIPER CONTACT RATING:

   (a) STATIONARY (AT REST) WIPER CONTACT RATING (FULL LOAD):
   6 AMPERES, PARALLEL COMBINATION(S) (NON-INDUCTIVE)
   3 AMPERES, SINGLE COMBINATION(S) (NON-INDUCTIVE)
   FOR LEVEL 1-2 and 3-4

   (b) WIPER CONTACT RATING ON MAKE OR BREAK.
   0.2 AMPERE, PARALLEL COMBINATION(S) (NON-INDUCTIVE)
   0.1 AMPERE, SINGLE COMBINATION(S) (NON-INDUCTIVE)
   FOR LEVELS 5-6 and 7

   (c) ALL CURRENT LEVELS IN (a) and (b) at 28± 1V DC.

9. CONFIGURATION AND DIMENSIONS· (SEE FIGURE 1.)

10. TERMINAL IDENTIFICATION (SEE FIGURE 2.)

11. MARKING: THE MANUFACTURER'S IDENTIFICATION, PART NUMBER, AND OTHER STANDARD MARKING SHALL BE USED.

12. RESISTANCE TO SOLVENTS. MARKING SHALL BE LEGIBLE AND THERE SI BE NO PHYSICAL DETERIORATION AFTER TESTING IN ACCORDANCE WITH MIL-STD-202, METHOD 215.

Preparing Activity
Navy - AS
Project No. 5930-N502