MIL-STD-1554
1 JULY 1975

MILITARY STANDARD

INSERT ARRANGEMENTS FOR MIL-C-83723 SERIES III AND MIL-C-26500

ENVIRONMENT RESISTING, CIRCULAR, ELECTRICAL CONNECTORS

FSC 5935

DEPARTMENT OF DEFENSE
Washington, D.C. 20301

Insert Arrangements for MIL-C-83723 Series III and MIL-C-26500 Environment Resisting, Circular, Electrical Connectors

MIL-STD-1554

1. This military standard is approved for use by all Departments and Agencies of the Department of Defense.

2. Recommended corrections, additions, or deletions should be addressed to the Engineering and Technical Support Division, Air Force Logistics Command, MMGE, Wright-Patterson AFB, Ohio 45433.

CONTENTS

Paragraph		Page
1.	SCOPE	1
2.	REFERENCED DOCUMENTS	1
3.	DEFINITIONS	1
4.	GENERAL REQUIREMENTS (Not applicable)	1
5.	DETAIL REQUIREMENTS	1
5.1	Dimensions	1
5.2	Main key or keyway polarization	1
5.3	Marking	3

SECTIONS

Section		
10	Shell Size 8	10.1
20	Shell Size 10	20.1
30	Shell Size 12	30.1
40	Shell Size 14	40.1
50	Shell Size 16	50.1
60	Shell Size 18	60.1
70	Shell Size 20	70.1
80	Shell Size 22	80.1
90	Shell Size 24	90.1

1. SCOPE

1.1 This standard covers insert arrangements for use with MIL-C-83723 series III and MIL-C-26500 environment resisting, circular, electrical connectors.

2. REFERENCED DOCUMENTS

2.1 The issues of the following documents in effect on the date of invitation for bids form a part of this standard to the extent specified herein.

SPECIFICATIONS

MILITARY

MIL-C-26500 - Connectors, General Purpose, Electrical, Miniature, Circular, Environment Resisting, General Specification for.
MIL-C-83723 - Series III - Connectors, Electrical, (Circular, Environment Resisting), Receptacles and Plugs, General Specification for.

(Copies of specifications, standards, drawings and publications required by suppliers in connection with specific procurement functions should be obtained from the procuring activity or as directed by the contracting officer.)

2.2 Other publications. The following document forms a part of this standard to the extent specified herein.

ANSI Y14.5-1973 - Dimensioning and Tolerancing.

(Application for copies should be addressed to American Standards Institute, 1430 Broadway, New York, NY 10018.)

3. DEFINITIONS

3.1 The terms used in this standard are generally accepted by the electrical and electronics industries and commonly used in electrical connector engineering practice.

4. GENERAL REQUIREMENTS

Not applicable.

5. DETAIL REQUIREMENTS

5.1 Dimensions. Dimensions shall be in accordance with the applicable section of this standard and the following dimensional data:

(a) Dimensioning and tolerancing in accordance with ANSI Y14.5-1973. Dimensions are true position and in inches.
(b) Metric equivalents (to the nearest .01 mm) are given for general information only and are based upon 1 inch = 25.4 mm.
(c) Dimensions and markings shown are for engaging face of pin insert; socket insert is opposite.
(d) The following tolerances apply to insert installed in shell:
  1. Center of each hole in insert shall be located at true position within .014 dia. $\boxed{\oplus .014 \text{ dia.}}$
  2. Center of engaging end of each contact shall be located at true position within .024 dia. $\boxed{\oplus .024 \text{ dia.}}$
(e) Unless otherwise indicated, dimensions are symmetrical about centerline.

5.2 Main key or keyway polarization (see figure 1).

(a) Each insert arrangement is shown in the "normal position" in the shell.
(b) For alternate polarizing positions, the connector insert is rotated in respect to the shell.

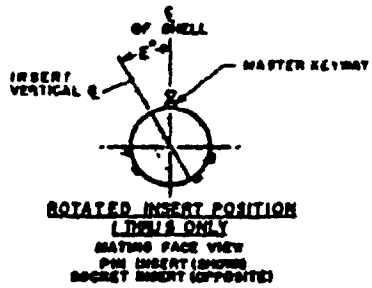

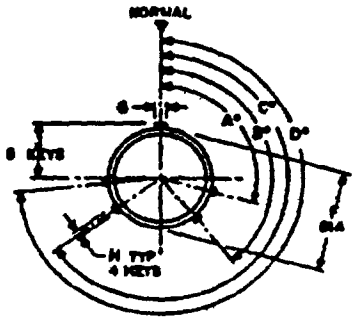

PLUG SHELL
MATING FACE

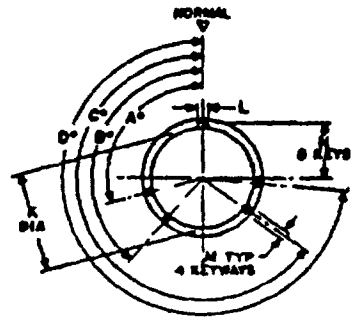

RECEPTACLE SHELL
MATING FACE

ALTERNATE SHELL KEY POSITIONS FOR CONNECTORS													INSERT POSITION E°
POSITION	SIZE 8				SIZE 10				SIZES 12 THRU 24				
	A°	B°	C°	D°	A°	B°	C°	D°	A°	B°	C°	D°	
0-NORMAL	105	140	215	265	105	140	215	265	105	140	215	265	0
1	-	-	-	-	↑	↑	↑	↑	↑	↑	↑	↑	10
2	-	-	-	-									20
3	-	-	-	-									30
4	-	-	-	-	↓	↓	↓	↓	↓	↓	↓	↓	40
5	-	-	-	-	105	140	215	265	105	140	215	265	50
6	102	132	240	320	102	132	240	320	18	148	192	288	0
7	90	118	230	312	90	118	230	312	96	152	222	342	0
8	38	140	206	278	38	140	206	278	84	152	204	334	0
9	64	156	234	304	64	156	234	304	24	138	199	246	0
10					25	118	220	270	96	152	266	336	0

SHELL SIZE	F +.000 -.005	G ±.005	H ±.005	J +.000 -.003	K +.005 -.000	L ±.005	M +.005 -.000	N +.005 -.000
8	.424	.084	.042	.234	.428	.094	.062	.237
10	.528	.084	.062	.286	.530	.094	.072	.286
12	.666	.084	.062	.370	.700	.094	.072	.373
14	.766	.084	.062	.435	.766	.094	.072	.436
16	.892	.115	.062	.466	.896	.125	.072	.471
18	.996	.115	.062	.521	1.002	.125	.072	.534
20	1.123	.115	.062	.583	1.127	.125	.072	.596
22	1.246	.115	.062	.646	1.252	.125	.072	.649
24	1.373	.115	.062	.708	1.377	.125	.072	.711

Main key/keyway polarization

INCHES	MM	INCHES	MM	INCHES	MM
.003	.08	.373	9.47	.700	17.78
.004	.10	.405	10.29	.708	17.98
.005	.13	.408	10.36	.711	18.06
.042	1.07	.424	10.77	.765	19.43
.052	1.32	.428	10.87	.769	19.53
.063	1.60	.468	11.89	.892	22.66
.072	1.83	.471	11.96	.896	22.76
.084	2.13	.521	13.23	.998	25.35
.094	2.39	.524	13.31	1.002	25.45
.115	2.92	.528	13.36	1.123	28.52
.125	3.18	.530	13.46	1.127	28.63
.234	5.94	.583	14.81	1.248	31.70
.237	6.02	.586	14.88	1.252	31.80
.285	7.24	.646	16.41	1.373	34.87
.288	7.32	.649	16.48	1.377	34.98
.370	9.40	.696	17.68		

FIGURE 1. Main key or keyway polarization.

(c) In the "normal position" (position "N") the indexing radius coincides with the ℄ of the master key or keyway of shell.
(d) In "alternate insert positions" (positions 1, 2, 3, 4, and 5) the socket insert is rotated clockwise relative to the centerline of the master key or keyway of shell.
(e) In "alternate insert position" (positions 1, 2, 3, 4, and 5) the pin insert is rotated counter-clockwise relative to the centerline of the master key or keyway of shell.
(f) In "alternate keying position" (positions 6, 7, 8, 9, and 10) the keys or keyways are positioned as indicated in figure 1 with reference to the master key or keyway.
(g) Four keys or keyways (MMC) and insert shall be located within .004 either side of (TP) relative to master key or keyway (MMC) and shell OD or ID (MMC)
(h) Alternate insert positions 1, 2, 3, 4, and 5 are for interchangeability use only. Not recommended for new design.

5.3 Marking. Marking shall be in accordance with MIL-C-83723 series III, MIL-C-26500, and as shown in the applicable section of this military standard.

Custodians:
Army - EL
Navy - AS
Air Force - 85

Review activities:
Army - MU, AV, MI
Navy - EC
Air Force - 11, 15, 17, 80
DSA - ES

User activities:
Army -
Navy -
Air Force -

Preparing activity:
Air Force - 85

(Project 5935-1949)

SECTION 10

SHELL SIZE 8

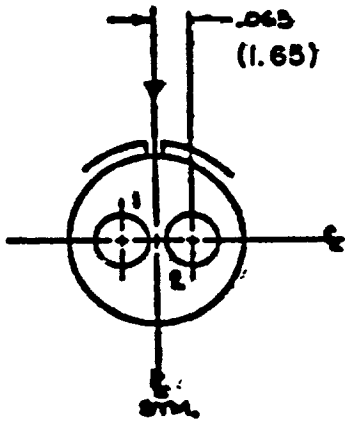

Shell size	Arrange-ment No.	Number of contacts	Size contacts	Service rating	Contact location	Superseded document
8	2	2	20	I	All	MS27561-2

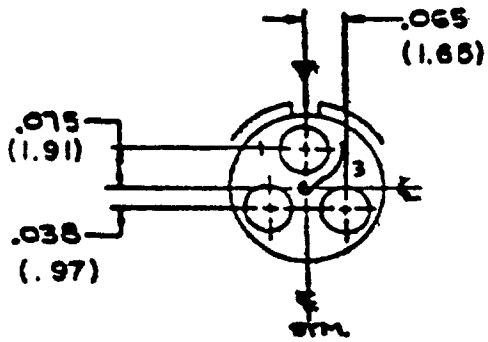

Shell size	Arrange-ment No.	Number of contacts	Size contacts	Service rating	Contact location	Superseded document
8	3	3	20	I	All	MS27561-3

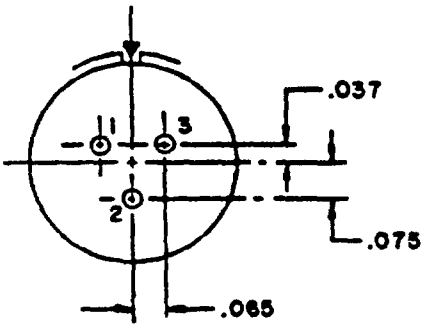

INCHES	MM
.037	.94
.065	1.65
.075	1.91

Shell size	Arrangement No.	Number of contacts	Size contacts	Service rating	Contact location	Superseded document
8	98	3	20	I	All	---

SECTION 20

SHELL SIZE 10

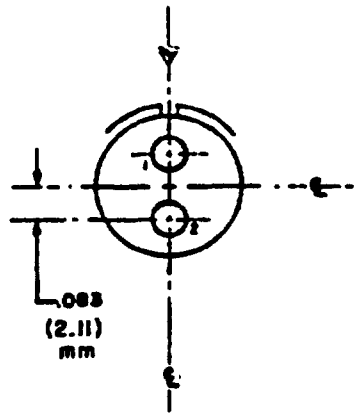

Shell size	Arrangement No.	Number of contacts	Size contacts	Service rating	Contact location	Superseded document
10	2	2	20	I	All	MS24260-2

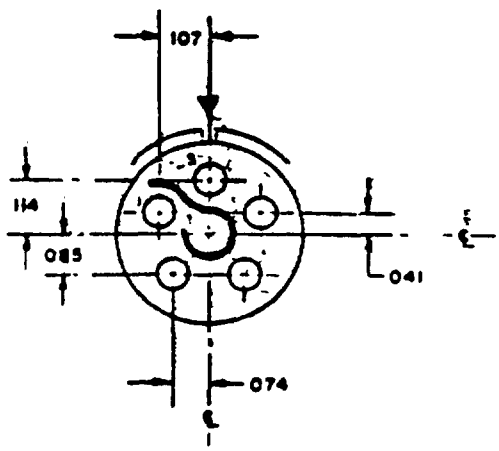

INCHES	MM
.041	1.04
.074	1.88
.085	2.16
.107	2.72
.114	2.90

Shell size	Arrangement No.	Number of contacts	Size contacts	Service rating	Contact location	Superseded document
10	5	5	20	I	All	MS24260-5

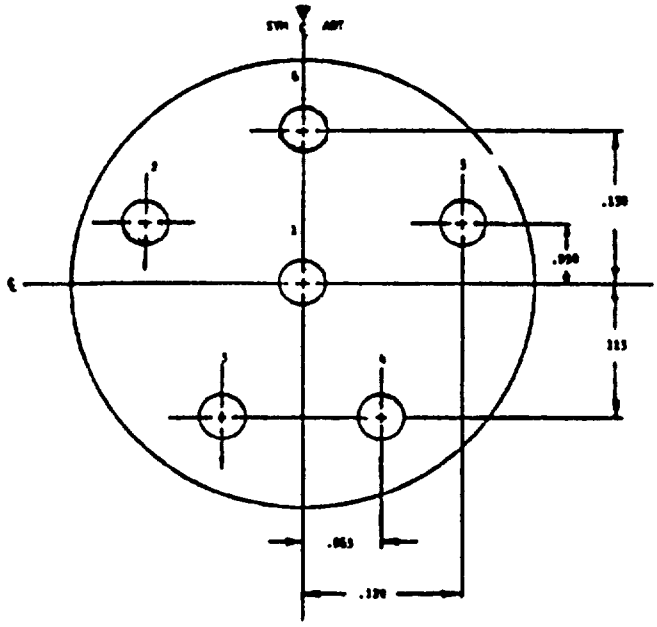

INCHES	MM
.050	1.27
.065	1.65
.113	2.87
.120	3.05
.130	3.30

Shell size	Arrangement No.	Number of contacts	Size contacts	Service rating	Contact location	Superseded document
10	6	6	20	I	All	MS27748-6

Applicable to MIL-C-83723 Series III only.

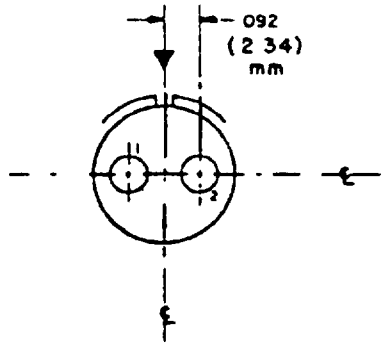

Shell size	Arrangement No.	Number of contacts	Size contacts	Service rating	Contact location	Superseded document
10	20	2	16	I	All	MS24260-20

SECTION 30

SHELL SIZE 12

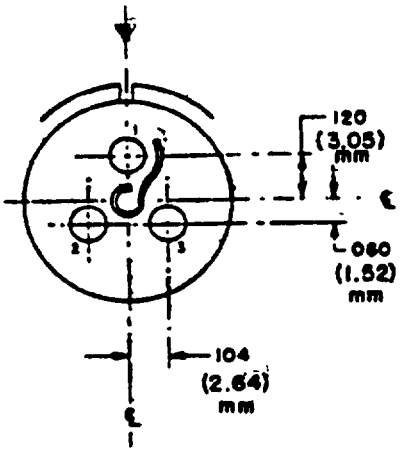

Shell size	Arrange-ment No.	Number of contacts	Size contacts	Service rating	Contact location	Superseded document
12	3	3	16	I	All	MS24260-3

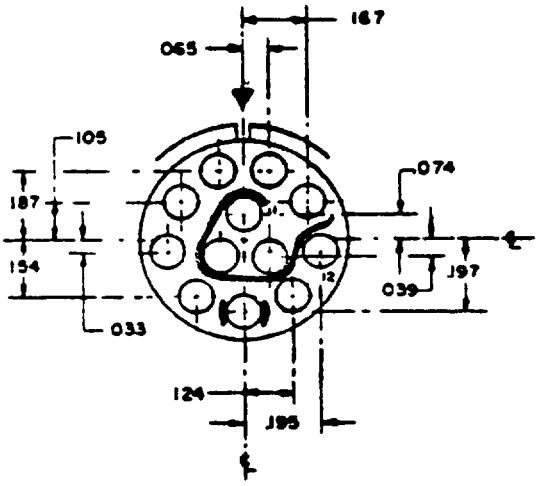

INCHES	MM	INCHES	MM
.033	.84	.154	3.91
.039	.99	.167	4.24
.065	1.65	.187	4.75
.074	1.88	.195	4.95
.105	2.67	.197	5.00
.124	3.15		

Shell size	Arrange-ment No.	Number of contacts	Size contacts	Service rating	Contact location	Superseded document
12	12	12	20	I	All	MS24260-12

SECTION 40

SHELL SIZE 14

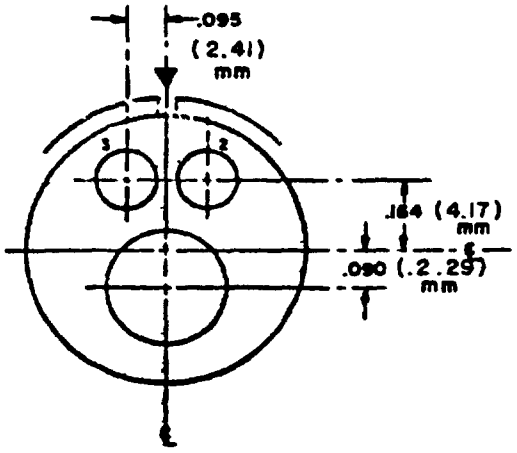

Shell size	Arrangement No.	Number of contacts	Size contacts	Service rating	Contact location	Superseded document
14	3	1	Shielded per MS27184-20P MS27185-20S	I	1	MS24260-3
		2	16		2,3	

Applicable to MIL-C-26500 only.

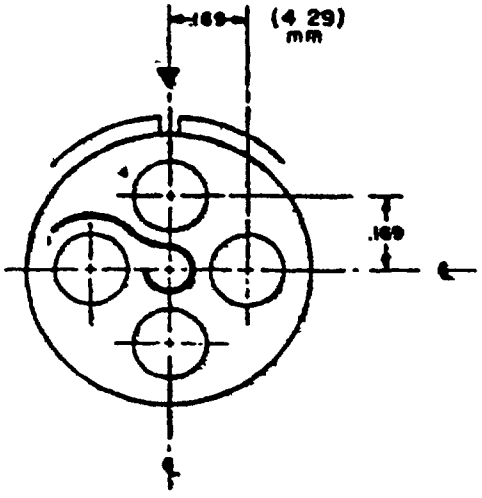

Shell size	Arrangement No.	Number of contacts	Size contacts	Service rating	Contact location	Superseded document
14	4	4	12	I	All	MS24260-4
	5*	4	Shielded per MS27184-22P MS27185-22S	I	All	MS24260-5

*Applicable to MIL-C-26500 only.

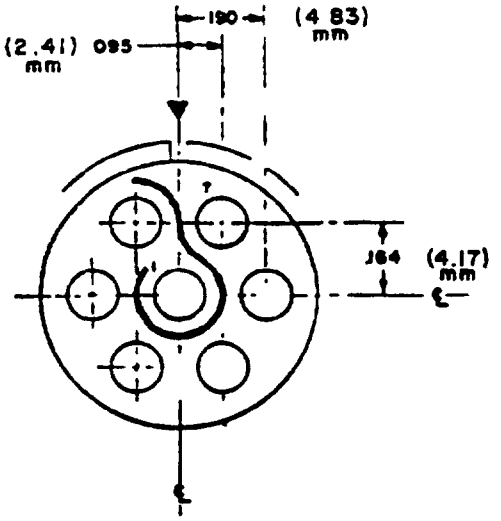

Shell size	Arrangement No.	Number of contacts	Size contacts	Service rating	Contact location	Superseded document
14	7	7	16	I	All	MS24260-7

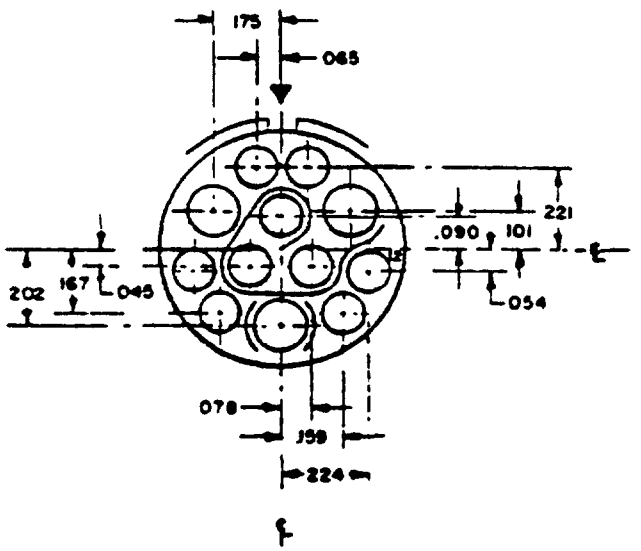

INCHES	MM	INCHES	MM
.045	1.14	.159	4.04
.054	1.37	.167	4.24
.065	1.65	.175	4.45
.078	1.98	.202	5.13
.090	2.29	.221	5.61
.101	2.57	.224	5.69

Shell size	Arrangement No.	Number of contacts	Size contacts	Service rating	Contact location	Superseded document
14	12	9	20	I	All others	MS24260-12
		3	16		4, 7, 10	

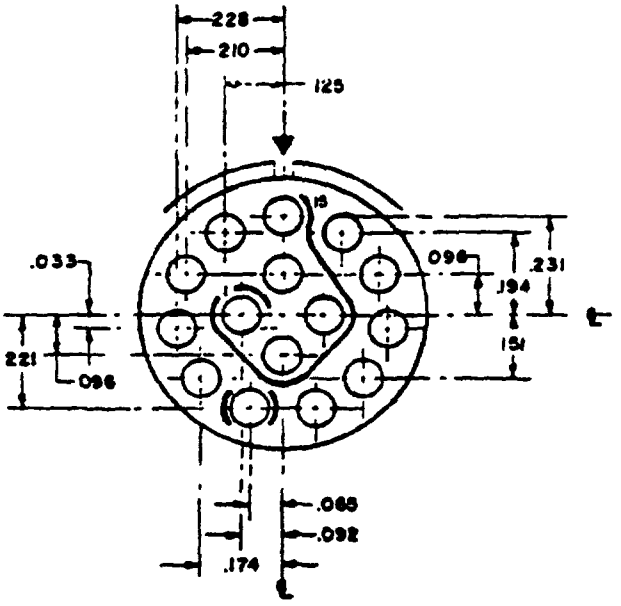

Shell size	Arrangement No.	Number of contacts	Size contacts	Service rating	Contact location	Superseded document
14	15	15	20	I	All	MS24260-15

INCHES	MM	INCHES	MM
.033	.83	.174	4.42
.065	1.65	.194	4.93
.092	2.34	.210	5.33
.096	2.44	.221	5.61
.125	3.18	.228	5.79
.151	3.84	.231	5.87

SECTION 50

SHELL SIZE 16

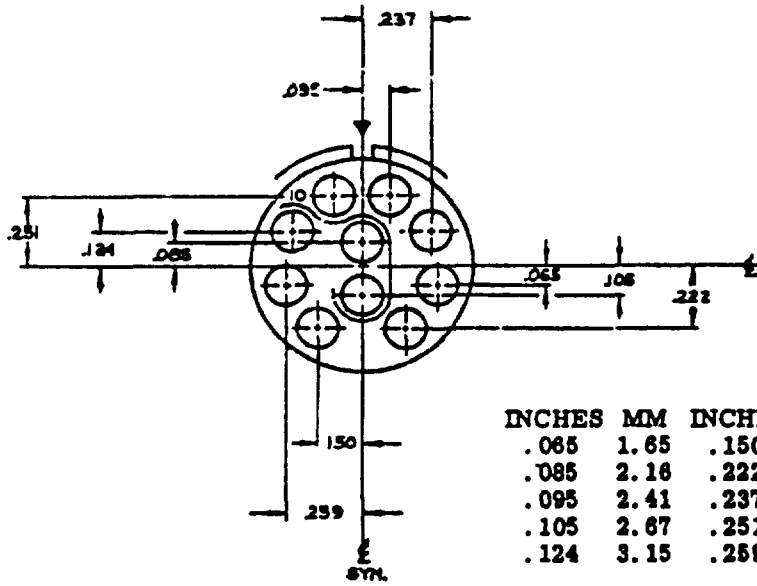

INCHES	MM	INCHES	MM
.065	1.65	.150	3.81
.085	2.16	.222	5.64
.095	2.41	.237	6.02
.105	2.67	.251	6.38
.124	3.15	.259	6.58

Shell size	Arrange-ment No.	Number of contacts	Size contacts	Service rating	Contact location	Superseded document
16	10	10	16	I	All	MS24261-10

INCHES	MM	INCHES	MM
.028	.71	.167	4.24
.037	.94	.177	4.50
.065	1.65	.204	5.18
.075	1.91	.224	5.69
.093	2.36	.232	5.89
.102	2.59	.269	6.83
.112	2.84	.289	7.34
.140	3.56	.297	7.54

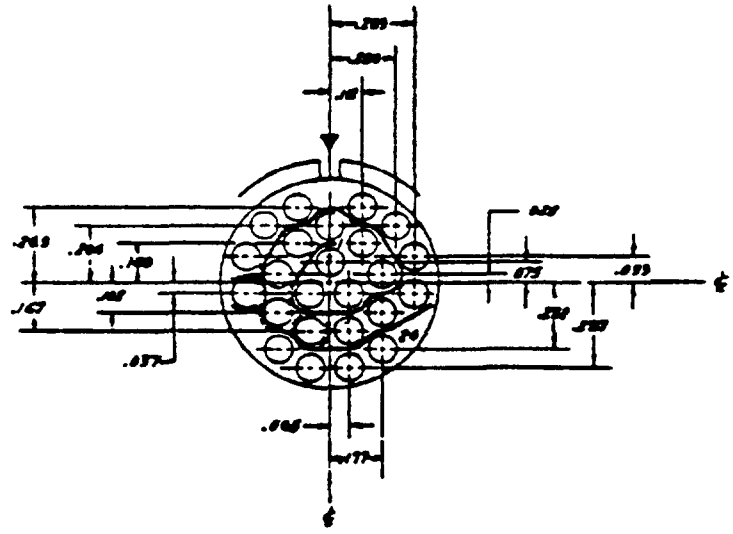

Shell size	Arrange-ment No.	Number of contacts	Size contacts	Service rating	Contact location	Superseded document
16	24	24	20	I	All	MS24261-24

SECTION 60

SHELL SIZE 18

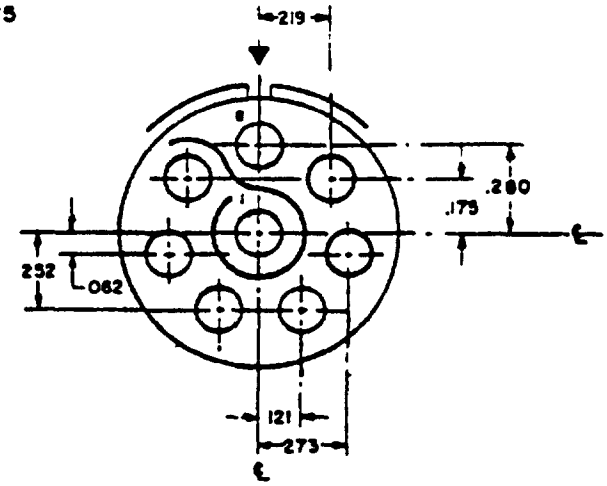

INCHES	MM
.062	1.57
.121	3.07
.175	4.45
.219	5.56
.252	6.40
.273	6.93
.280	7.11

Shell size	Arrangement No.	Number of contacts	Size contacts	Service rating	Contact location	Superseded document
18	8	8	12	I	All	MS24262-8
	9*	6	Shielded per MS27184-22P MS27185-22S	I	2, 3, 4, 5 7 and 8	MS24262-9
		2	12	I	1 and 6	

*Applicable to MIL-C-26500 only.

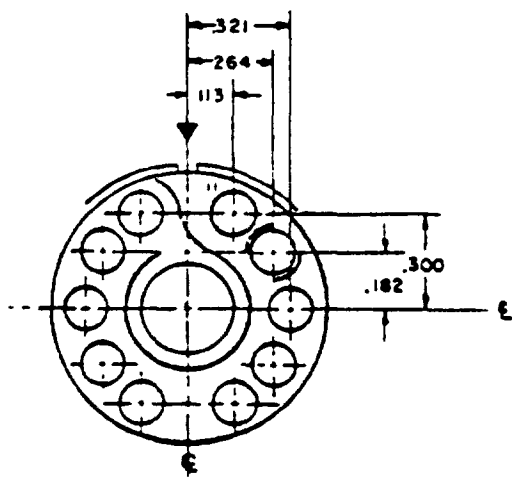

INCHES	MM
.113	2.87
.182	4.62
.264	6.71
.300	7.62
.321	8.15

Shell size	Arrangement No.	Number of contacts	Size contacts	Service rating	Contact location	Superseded document
18	11	1	Shielded per MS27184-20P MS27185-20S	I	1	MS24262-11
		10	16		All others	

Applicable to MIL-C-26500 only.

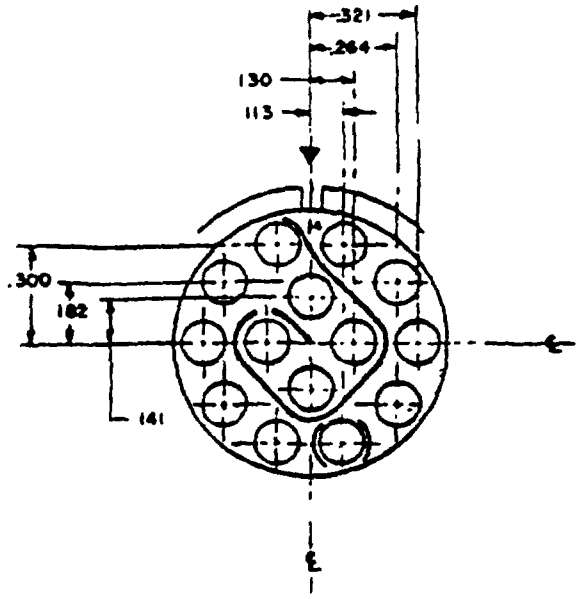

INCHES	MM
.113	2.87
.130	3.30
.141	3.58
.182	4.62
.264	6.71
.300	7.62
.321	8.15

Shell size	Arrangement No.	Number of contacts	Size contacts	Service rating	Contact location	Superseded document
18	14	14	16	I	All	MS24262-14

INCHES	MM
.065	1.65
.113	2.87
.130	3.30
.195	4.95
.226	5.74
.260	6.60
.325	8.26
.339	8.61

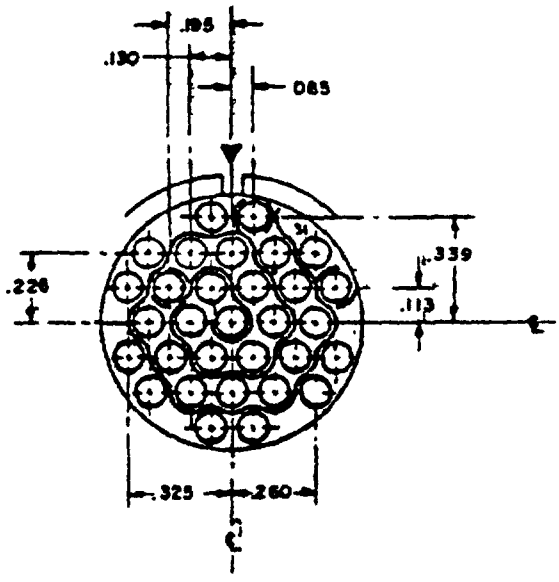

Shell size	Arrangement No.	Number of contacts	Size contacts	Service rating	Contact location	Superseded document
18	31	31	20	I	All	MS24262-31

SECTION 70

SHELL SIZE 20

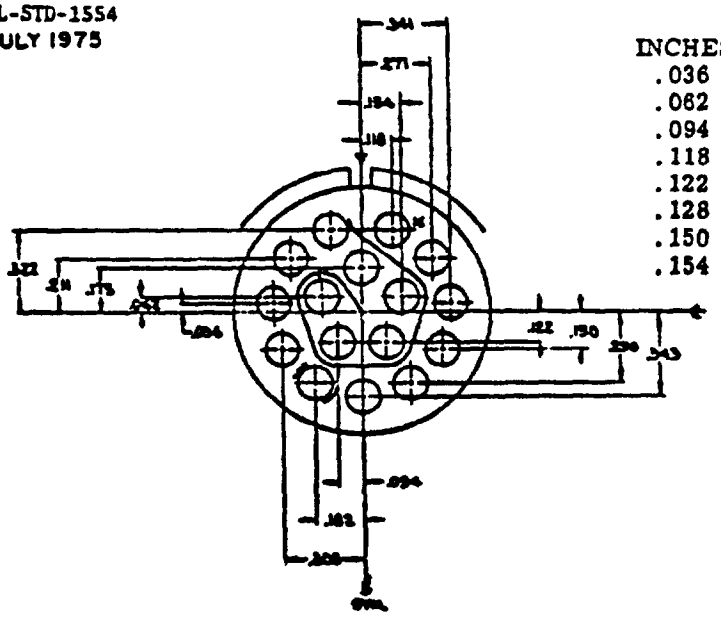

INCHES	MM	INCHES	MM
.036	.91	.175	4.45
.062	1.57	.211	5.36
.094	2.39	.271	6.88
.118	3.00	.290	7.37
.122	3.10	.308	7.82
.128	3.25	.322	8.18
.150	3.81	.341	8.66
.154	3.91	.343	8.71

Shell size	Arrange-ment No.	Number of contacts	Size contacts	Service rating	Contact location	Superseded document
20	16	16	16	I	All	MS27561-16

INCHES	MM	INCHES	MM
.066	1.68	.202	5.13
.114	2.90	.228	5.79
.132	3.35	.303	7.70
.175	4.45	.350	8.89
.198	5.03	.404	10.26

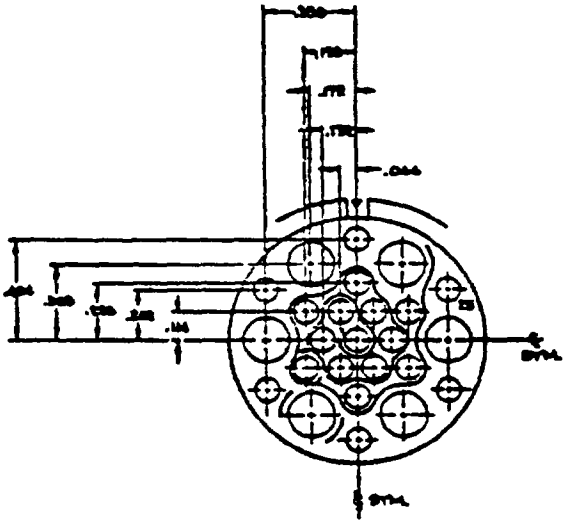

Shell size	Arrange-ment No.	Number of contacts	Size contacts	Service rating	Contact location	Superseded document
20	25	19	20	I	All	MS27561-25
		6	12			

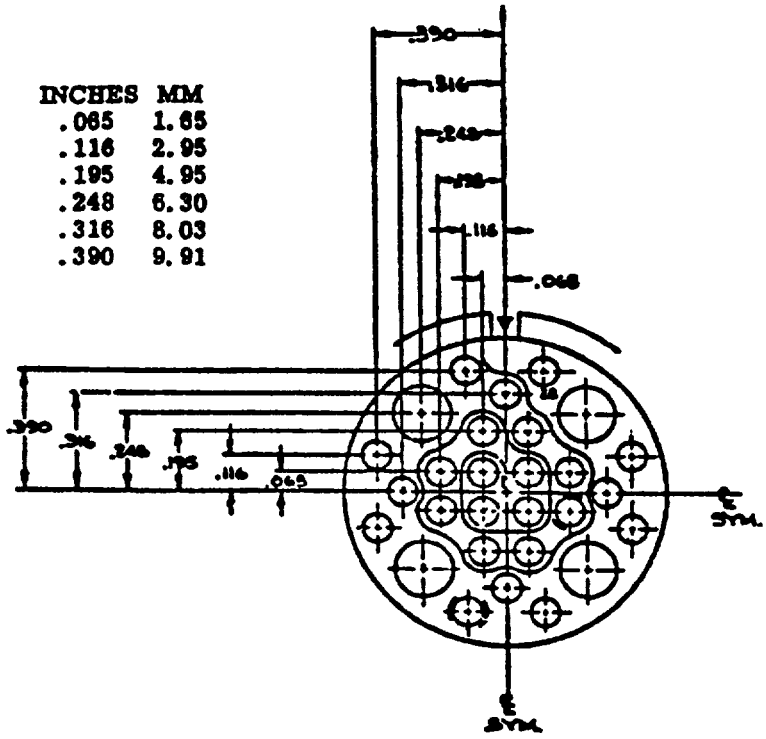

Shell size	Arrangement No.	Number of contacts	Size contacts	Service rating	Contact location	Superseded document
20	28	24	20	I	All	MS27561-28
		4	12			

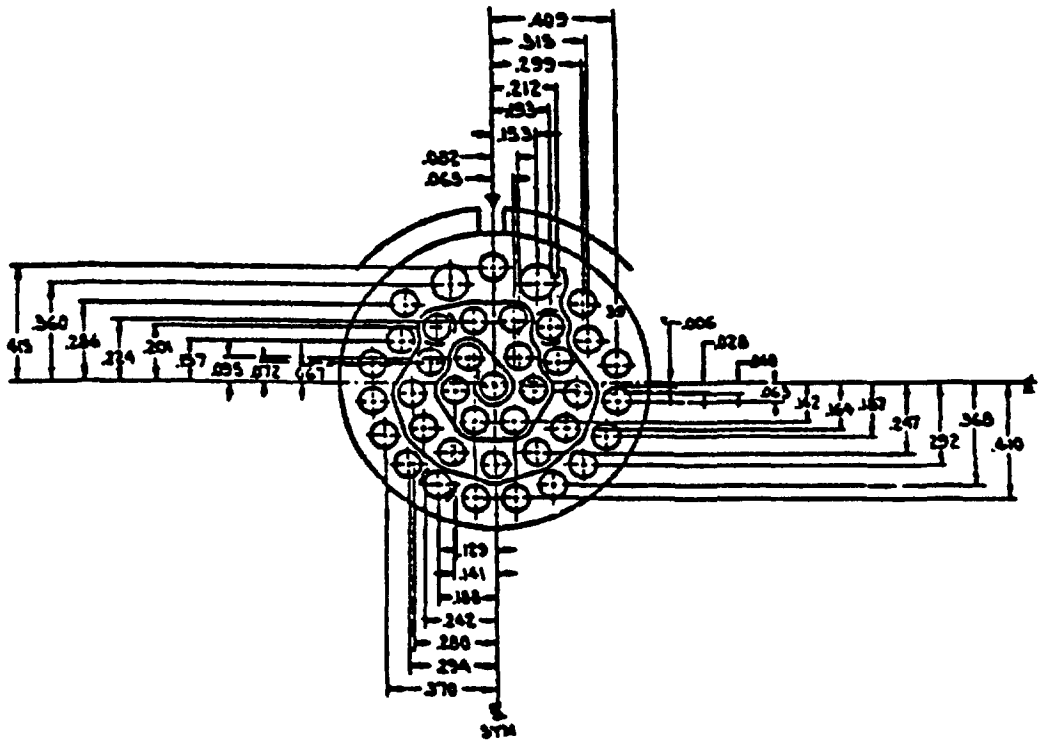

Shell size	Arrangement No.	Number of contacts	Size contacts	Service rating	Contact location	Superseded document
20	39	37	20	I	A11	MS27561-39
		2	16			

INCHES	MM	INCHES	MM	INCHES	MM
.006	.15	.153	3.89	.286	7.26
.028	.71	.157	3.99	.292	7.42
.040	1.02	.164	4.17	.294	7.47
.063	1.60	.187	4.75	.299	7.59
.065	1.65	.188	4.78	.315	8.00
.067	1.70	.193	4.90	.360	9.14
.072	1.83	.201	5.11	.368	9.35
.082	2.08	.212	5.38	.370	9.40
.095	2.41	.224	5.69	.409	10.39
.129	3.28	.242	6.15	.410	10.41
.141	3.58	.247	6.27	.415	10.54
.142	3.61	.280	7.11		

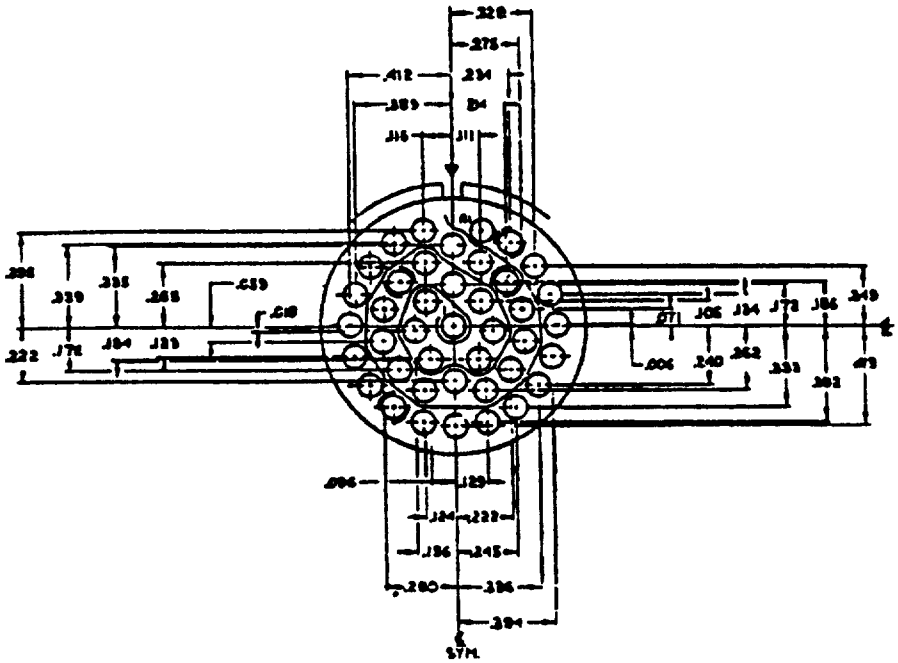

Shell size	Arrangement No.	Number of contacts	Size contacts	Service rating	Contact location	Superseded document
20	41	41	20	I	A11	MS27561-41

INCHES	MM	INCHES	MM	INCHES	MM	INCHES	MM
.006	.15	.124	3.15	.234	5.94	.333	8.46
.018	.46	.129	3.28	.240	6.10	.335	8.51
.059	1.50	.134	3.40	.245	6.22	.336	8.53
.071	1.80	.156	3.96	.249	6.32	.339	8.61
.096	2.44	.172	4.37	.262	6.65	.389	9.88
.105	2.67	.176	4.47	.265	6.73	.392	9.96
.111	2.82	.186	4.72	.275	6.99	.394	10.01
.116	2.95	.214	5.44	.280	7.11	.395	10.03
.123	3.12	.222	5.64	.328	8.33	.412	10.46
						.413	10.49

SECTION 80

SHELL SIZE 22

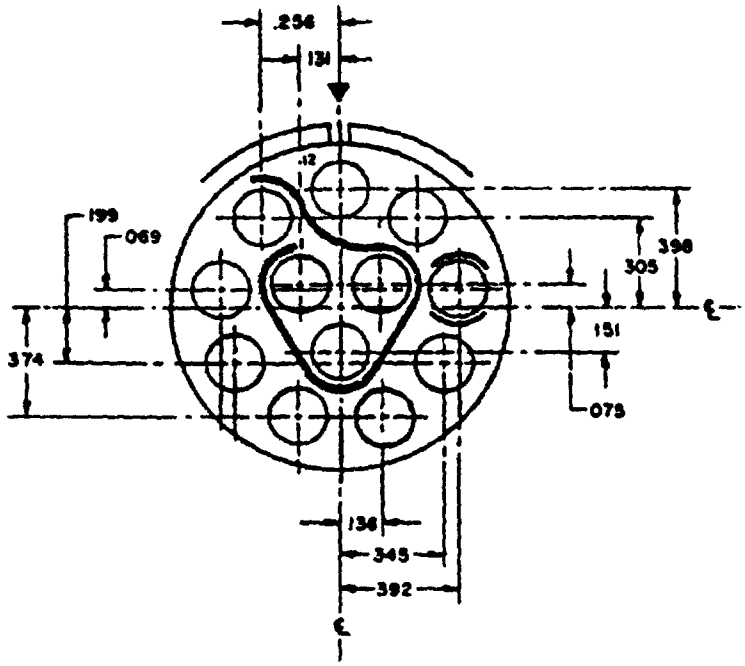

Shell size	Arrangement No.	Number of contacts	Size contacts	Service rating	Contact location	Superseded document
22	12	12	12	I	All	MS24263-12
	13*	11	Shielded per MS27184-22P MS27185-22S	I	1 thru 9 11 and 12	MS24263-13
		1	12	I	10	
	14*	9	Shielded per MS27184-22P MS27185-22S	I	1 thru 9	MS24263-14
		3	12	I	10, 11, and 12	

*Applicable to MIL-C-26500 only.

INCHES	MM	INCHES	MM
.069	1.75	.256	6.50
.075	1.91	.305	7.75
.131	3.33	.345	8.76
.136	3.45	.374	9.50
151	3.84	.392	9.96
.199	5.05	.398	10.11

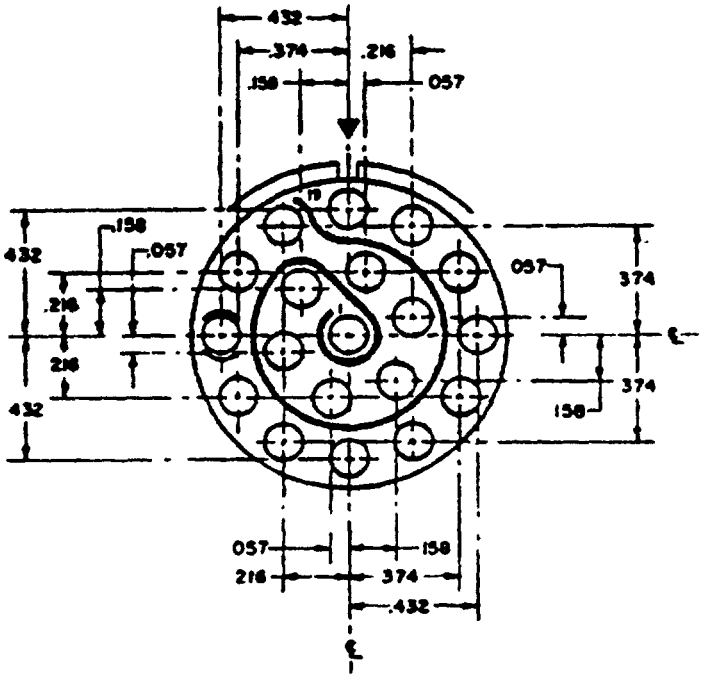

Shell size	Arrange-ment No.	Number of contacts	Size contacts	Service rating	Contact location	Superseded document
22	19	19	16	I	All	MS24263-19

INCHES	MM
.057	1.45
.158	4.01
.216	5.49
.374	9.50
.432	10.97

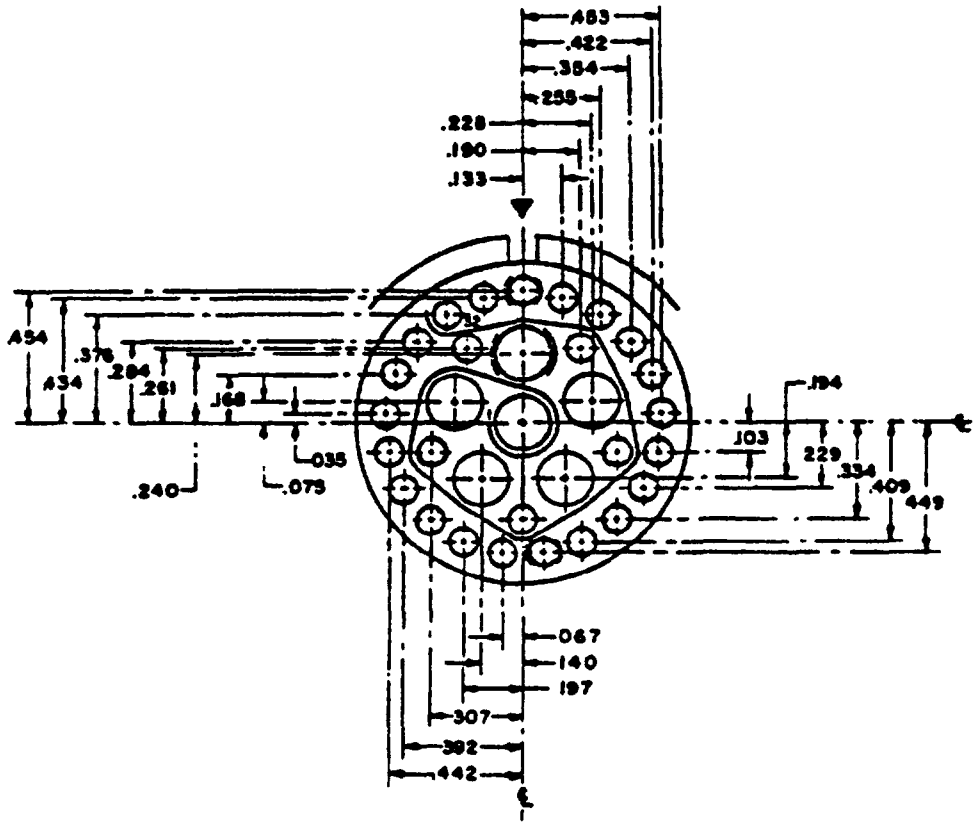

Shell size	Arrangement No.	Number of contacts	Size contacts	Service rating	Contact location	Superseded document
22	32	26	20	I	All	MS24263-32
		6	12			

INCHES	MM	INCHES	MM	INCHES	MM
.035	.89	.228	5.79	.376	9.55
.067	1.70	.229	5.82	.392	9.96
.075	1.91	.240	6.10	.409	10.39
.103	2.62	.255	6.48	.422	10.72
.133	3.38	.261	6.63	.434	11.02
.140	3.56	.284	7.21	.442	11.23
.168	4.27	.307	7.80	.449	11.40
.190	4.83	.334	8.48	.453	11.51
.194	4.93	.354	8.99	.454	11.53
.197	5.00				

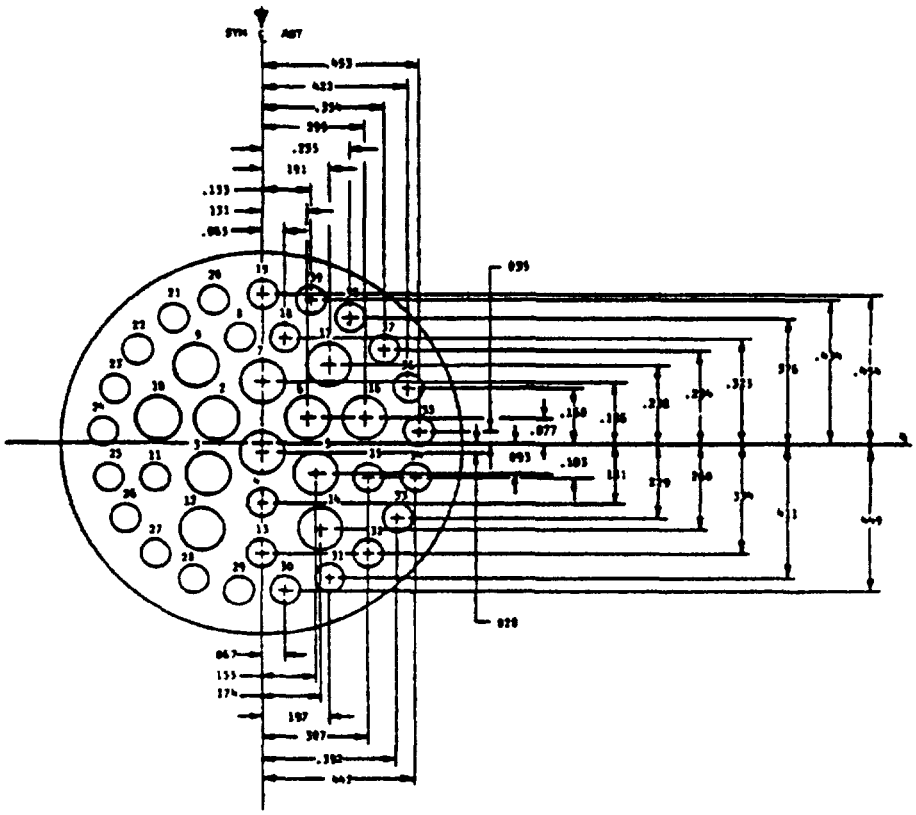

Shell size	Arrange-ment No	Number of contacts	Size contacts	Service rating	Contact location	Superseded document
22	39	27	20	I	All	MS27748-39
		12	16			

Applicable to MIL-C-83723 series III only.

INCHES	MM	INCHES	MM	INCHES	MM
.028	.71	.181	4.60	.354	8.99
.035	.89	.191	4.85	.376	9.55
.065	1.65	.197	5.00	.392	9.96
.067	1.70	.229	5.82	.411	10.44
.077	1.96	.238	6.05	.422	10.72
.093	2.36	.255	6.48	.434	11.02
.103	2.62	.260	6.60	.442	11.23
.131	3.33	.284	7.21	.449	11.40
.133	3.38	.299	7.59	.453	11.51
.155	3.94	.307	7.80	.454	11.53
.168	4.27	.323	8.20		
.174	4.42	.334	8.48		

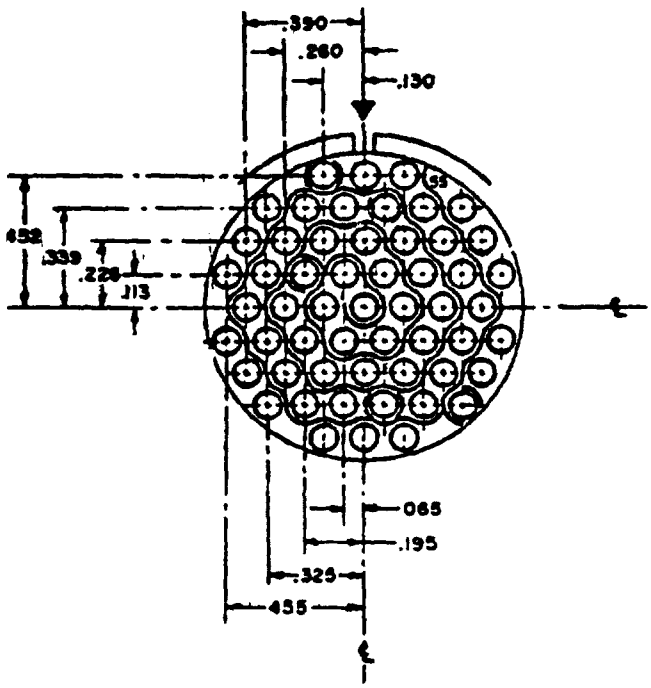

Shell size	Arrangement No.	Number of contacts	Size contacts	Service rating	Contact location	Superseded document
22	55	55	20	I	All	MS24263-55

INCHES	MM	INCHES	MM
.065	1.65	.325	8.26
.113	2.87	.339	8.61
.130	3.30	.390	9.91
.195	4.95	.452	11.48
.226	5.74	.455	11.56
.260	6.60		

SECTION 90

SHELL SIZE 24

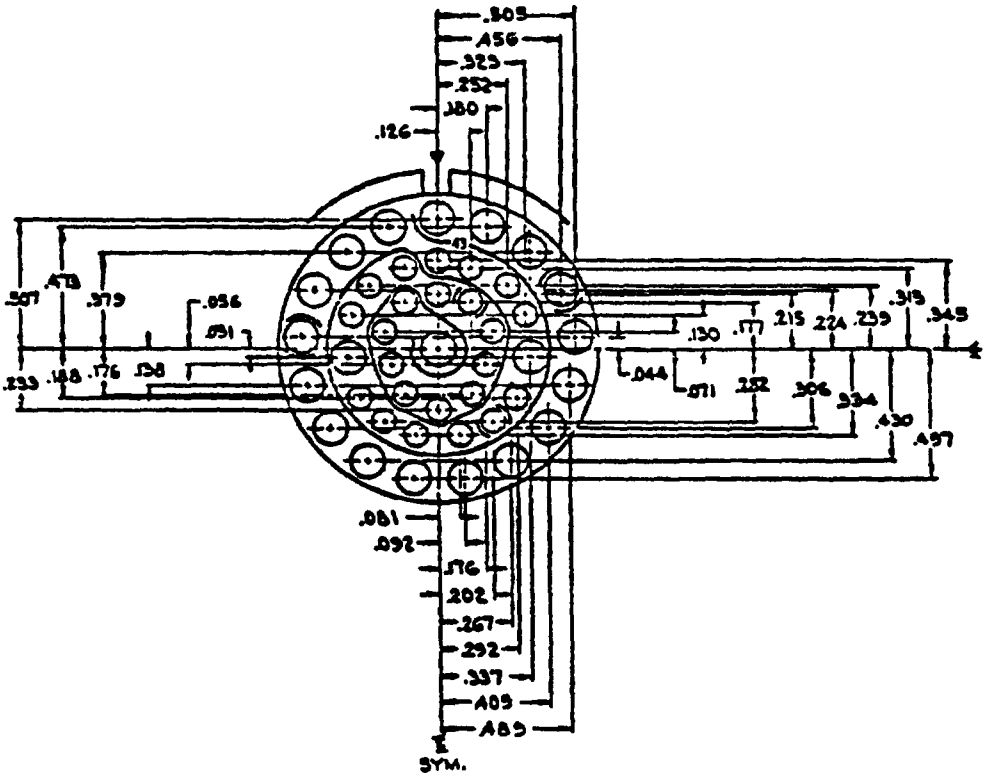

Shell size	Arrangement No.	Number of contacts	Size contacts	Service rating	Contact location	Superseded document
24	43	23	20	I	A11	MS27561-43
		20	16			

INCHES	MM	INCHES	MM	INCHES	MM
.031	.79	.202	5.13	.334	8.48
.044	1.12	.215	5.46	.337	8.56
.056	1.42	.224	5.69	.345	8.76
.071	1.80	.233	5.92	.379	10.08
.081	2.06	.239	6.07	.405	10.29
.092	2.34	.252	6.40	.430	10.92
.126	3.20	.267	6.78	.456	11.58
.130	3.30	.282	7.16	.473	12.01
.176	4.47	.292	7.42	.489	12.42
.177	4.50	.306	7.77	.497	12.62
.180	4.57	.315	8.00	.505	12.83
.188	4.73	.323	8.20	.507	12.88

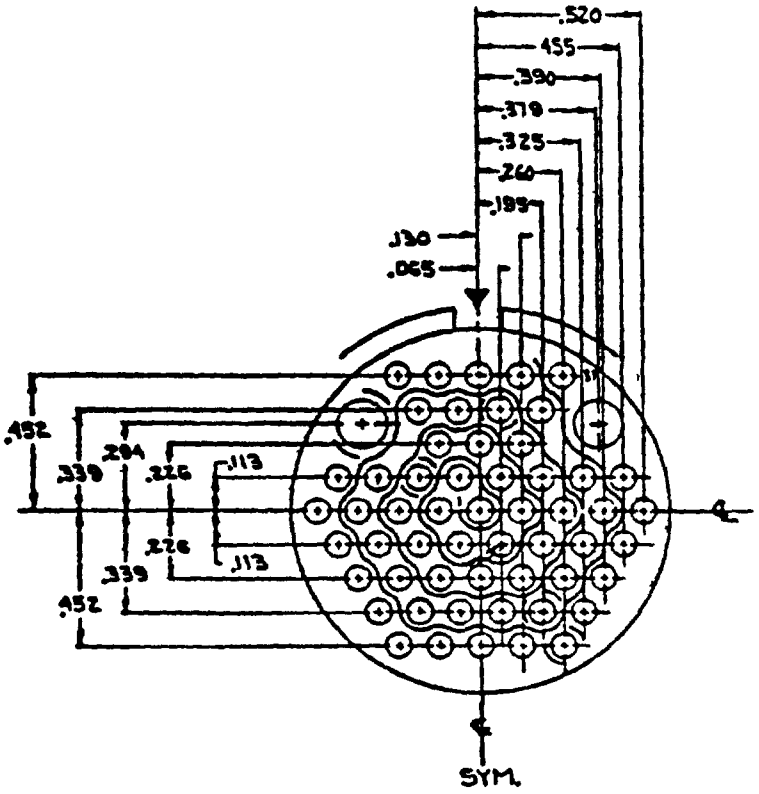

Shell size	Arrangement No.	Number of contacts	Size contacts	Service rating	Contact location	Superseded document
24	57	55	20	I	All	MS27561-57
		2	12			

INCHES	MM	INCHES	MM
.065	1.65	.325	8.26
.113	2.87	.339	8.61
.130	3.30	.379	9.63
.195	4.95	.390	9.91
.226	5.74	.452	11.48
.260	6.60	.455	11.56
.294	7.47	.520	13.21

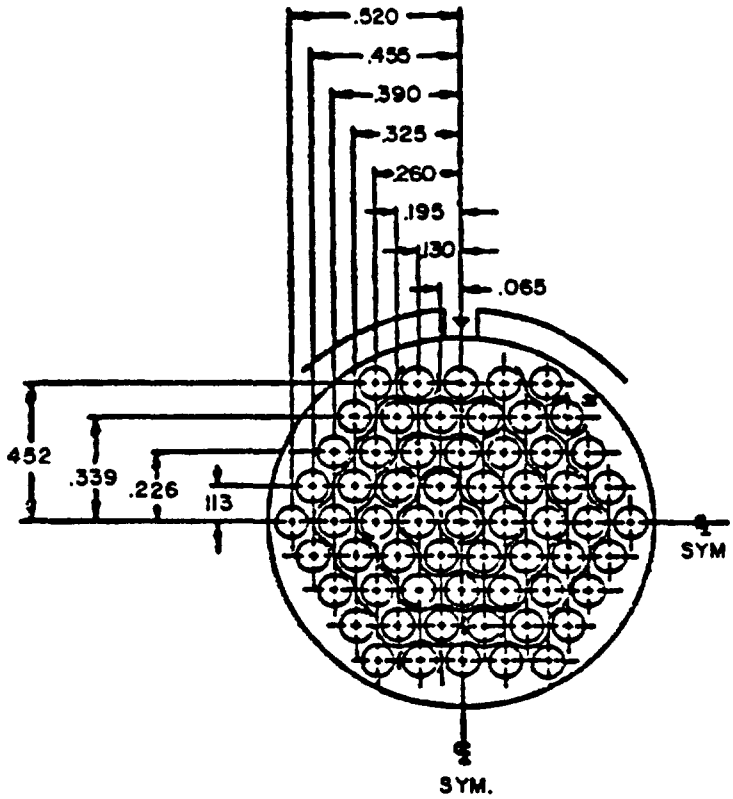

Shell size	Arrange-ment No.	Number of contacts	Size contacts	Service rating	Contact location	Supersedes document
24	61	61	20	I	All	MS27561-61

INCHES	MM	INCHES	MM
.065	1.65	.325	8.26
.113	2.87	.339	8.61
.130	3.30	.390	9.91
.195	4.95	.452	11.48
.226	5.74	.455	11.56
.260	6.60	.520	13.21

☆U.S. GOVERNMENT PRINTING OFFICE 1977-703-020/4708