MILITARY STANDARD

INSERT ARRANGEMENTS FOR MIL-C-83723 SERIES III AND MIL-C-26500 ENVIRONMENT RESISTING, CIRCULAR, ELECTRICAL CONNECTORS

TO ALL HOLDERS OF MIL-STD-1554:

1. THE FOLLOWING PAGES OF MIL-STD-1554 HAVE BEEN REVISED AND SUPERSEDE THE PAGES LISTED:

NEW PAGE	DATE	SUPERSEDED PAGE	DATE
1	15 January 1976	1	1 July 1975
2	1 July 1975	(REPRINTED WITHOUT CHANGE)	

2. THE FOLLOWING PAGE IS TO BE ADDED:

NEW PAGE	DATE
90.5	15 January 1976

3. RETAIN THIS NOTICE PAGE AND INSERT BEFORE THE TABLE OF CONTENTS.

4. Holders of MIL-STD-1554 will verify that page changes and additions indicated above have been entered. This notice page will be retained as a check sheet. This insurance, together with appended pages, is a separate publication. Each notice is to be retained by stocking points until the Military Standard is completely revised or canceled.

Custodians:
Army - EL
Navy - AS
Air Force - 85

Review activities:
Army - MU, AV, MI
Navy - EC
Air Force - 11, 15, 17, 80
DSA - ES

Preparing activity:
Air Force - 85

(Project 5935-2049)

☆U.S GOVERNMENT PRINTING OFFICE 1981—703 023/3534

1 SCOPE

1 1 This standard covers insert arrangements for use with MIL-C-83723 series III and MIL-C-26500 environment resisting, circular, electrical connectors.

2 REFERENCED DOCUMENTS

2 1 The issues of the following documents in effect on the date of invitation for bids form a part of this standard to the extent specified herein

SPECIFICATIONS

MILITARY

MIL-C-26500 - Connectors, General Purpose, Electrical, Miniature, Circular, Environment Resisting, General Specification for
MIL-C-83723 - Series III - Connectors, Electrical, (Circular, Environment Resisting), Receptacles and Plugs, General Specification for

(Copies of specifications, standards, drawings and publications required by suppliers in connection with specific procurement functions should be obtained from the procuring activity or as directed by the contracting officer)

2 2 Other publications. The following document forms a part of this standard to the extent specified herein.

ANSI Y14 5-1973 - Dimensioning and Tolerancing

(Application for copies should be addressed to American Standards Institute, 1430 Broadway, New York, NY 10018.)

3 DEFINITIONS

3 1 The terms used in this standard are generally accepted by the electrical and electronics industries and commonly used in electrical connector engineering practice.

4 GENERAL REQUIREMENTS

Not applicable

5 DETAIL REQUIREMENTS

5 1 Dimensions Dimensions shall be in accordance with the applicable section of this standard and the following dimensional data

(a) Dimensioning and tolerancing in accordance with ANSI Y14 5-1973. Dimensions are true position and in inches
(b) Metric equivalents (to the nearest 01 mm) are given for general information only and are based upon 1 inch = 25 4 mm
(c) Dimensions and markings shown are for engaging face of socket insert, pin insert is opposite
(d) The following tolerances apply to insert installed in shell
  1 Center of each hole in insert shall be located at true position within 014 dia. $\boxed{\oplus\ 014\ \text{dia.}}$
  2 Center of engaging end of each contact shall be located at true position within 024 dia. $\boxed{\oplus\ 024\ \text{dia}}$
(e) Unless otherwise indicated, dimensions are symmetrical about centerline

5 2 Main key or keyway polarization (see figure 1)

(a) Each insert arrangement is shown in the "normal position" in the shell
(b) For alternate polarizing positions, the connector insert is rotated in respect to the shell

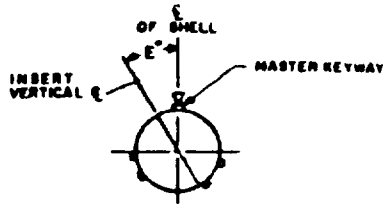

ROTATED INSERT POSITION
(1 THRU 5 ONLY)
MATING FACE VIEW
PIN INSERT (SHOWN)
SOCKET INSERT (OPPOSITE)

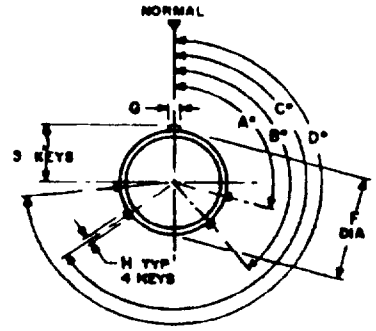

PLUG SHELL
MATING FACE

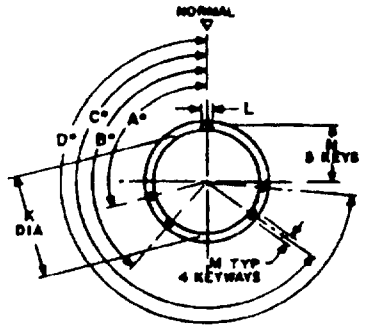

RECEPTACLE SHELL
MATING FACE

ALTERNATE SHELL KEY POSITIONS FOR CONNECTORS													INSERT POSITION E°
POSITION	SIZE 8				SIZE 10				SIZES 12 THRU 24				
	A°	B°	C°	D°	A°	B°	C°	D°	A°	B°	C°	D°	
IN NORMAL	105	140	215	265	105	140	215	265	105	140	215	265	0
1	-	-	-	-	↓	↓	↓	↓	↓	↓	↓	↓	10
2	-	-	-	-	↓	↓	↓	↓	↓	↓	↓	↓	20
3	-	-	-	-	↓	↓	↓	↓	↓	↓	↓	↓	30
4	-	-	-	-	↓	↓	↓	↓	↓	↓	↓	↓	40
5	-	-	-	-	105	140	215	265	105	140	215	265	50
6	102	132	248	320	102	132	248	320	18	148	192	259	0
7	80	118	230	312	80	118	230	312	92	182	222	342	0
8	35	140	208	275	35	140	205	275	84	152	204	334	0
9	64	155	234	304	64	155	234	304	24	135	199	240	0
10					25	115	220	270	98	152	268	338	0

SHELL SIZE	F +.000 -.005	G ±.003	H ±.003	J +.000 -.003	K +.005 -.000	L ±.003	M +.005 -.000	N +.005 -.000
8	.424	.084	.042	.234	.428	.094	.063	.237
10	.526	.084	.052	.285	.530	.094	.072	.289
12	.696	.084	.052	.370	.700	.094	.072	.373
14	.765	.084	.052	.405	.769	.094	.072	.406
16	.892	.115	.052	.468	.896	.125	.072	.471
18	.998	.115	.052	.521	1.002	.125	.072	.524
20	1.123	.115	.052	.583	1.127	.125	.072	.586
22	1.248	.115	.052	.646	1.252	.125	.072	.649
24	1.373	.115	.052	.708	1.377	.125	.072	.711

Main key/keyway polarization

INCHES	MM	INCHES	MM	INCHES	MM
.003	.08	.373	9.47	.700	17 78
.004	.10	.405	10 29	.708	17.98
.005	.13	.408	10.36	.711	18 06
.042	1.07	.424	10 77	.765	19.43
.052	1.32	.428	10 87	.769	19 53
.063	1.60	.468	11.89	.892	22.66
.072	1.83	.471	11 96	.896	22 76
.084	2.13	.521	13.23	.998	25 35
.094	2.39	.524	13 31	1.002	25 45
.115	2.92	.526	13.36	1.123	28 52
.125	3.18	.530	13.46	1.127	28 63
.234	5 94	.583	14.81	1.248	31 70
.237	6.02	.586	14.88	1.252	31.80
.285	7 24	.646	16.41	1.373	34 87
.288	7 32	.649	16.48	1.377	34 98
.370	9 40	.696	17.68		

FIGURE 1 Main key or keyway polarization

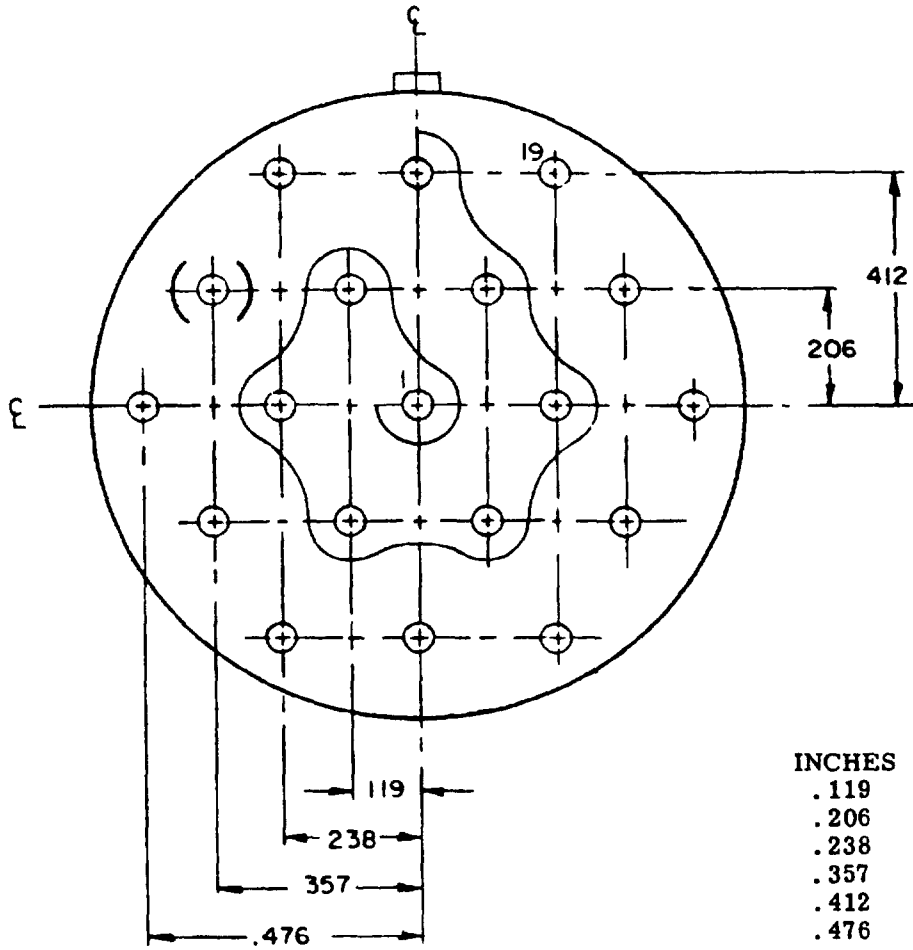

INCHES	MM
.119	3.02
.206	5.23
.238	6.05
.357	9.07
.412	10.46
.476	12.09

Shell size	Arrangement number	Number of contacts	Size contacts	Service rating	Contact location	Superseded document
24	19	19	12	I	All	---