NOTE: The cover page of this standard has
been changed for administrative reasons.
There are no other changes to this document.

INCH-POUND

MIL-STD-1560A
1 December 1975
SUPESEDING
MIL-STD-1560
22 April 1974

DEPARTMENT OF DEFENSE

INTERFACE STANDARD

INSERT ARRANGEMENTS FOR MIL-C-38999 AND MIL-C-27599 ELECTRICAL, CIRCULAR CONNECTORS

AMSC N/A
FSC 5935
DISTRIBUTION STATEMENT A. Approved for public release; distribution is unlimited.

DEPARTMENT OF DEFENSE
Washington, D.C. 20301

Insert Arrangements for MIL-C-38999
and MIL-C-27599 Electrical, Circular Connectors

MIL-STD-1560

1. This military standard is approved for use by all Departments and Agencies of the Department of Defense.

2. Recommended corrections, additions, or deletions should be addressed to the Commander, Air Force Logistics Command, MMGE, Wright-Patterson AFB, Ohio 45433.

CONTENTS

		Page
1.	SCOPE	1
2.	REFERENCED DOCUMENTS	1
3.	DEFINITIONS	1
4.	GENERAL REQUIREMENTS (nonapplicable)	1
5.	DETAILREQUIREMENTS	1
5.1	Dimensions	1
5.2	Marking	2
5.3	Drawing notes	2

SECTIONS

100A	INSERT ARRANGEMENTS, ELECTRICAL CONNECTORS, SERIES I, FOR MIL-C-38999 AND MIL-C-27599	100.1
101A	Insert Arrangement, Electrical Connector, Shell Size 9	101.1
102A	Insert Arrangement, Electrical Connector, Shell Size 11	102.1
103A	Insert Arrangement, Electrical Connector, Shell Size 13	103.1
104A	Insert Arrangement, Electrical Connector, Shell Size 15	104.1
105A	Insert Arrangement, Electrical Connector, Shell Size 17	105.1
106A	Insert Arrangement, Electrical Connector, Shell Size 19	106.1
107A	Insert Arrangement, Electrical Connector, Shell Size 21	107.1
108A	Insert Arrangement, Electrical Connector, Shell Size 23	108.1
109A	Insert Arrangement, Electrical Connector, Shell Size 25	109.1
200A	INSERT ARRANGEMENTS, ELECTRICAL CONNECTORS, SERIES II, FOR MIL-C-38999 AND MIL-27599	200.1
20lA	Insert Arrangement, Electrical Connector, Shell Size 8	201.1
202A	Insert Arrangement, Electrical Connector, Shell Size 10	202.1
203A	Insert Arrangement, Electrical Connector, Shell Size 12	203.1
204A	Insert Arrangement, Electrical Connector, Shell Size 14	204.1
205A	Insert Arrangement, Electrical Connector, Shell Size 16	205.1

SECTIONS - Continued

	Page
206A Insert Arrangement, Electrical Connector, Shell Size 18	206.1
207A Insert Arrangement, Electrical Connector, Shell Size 20	207.1
208A Insert Arrangement, Electrical Connector, Shell Size 22	208.1
209A Insert Arrangement, Electrical Connector, Shell size 24	209.1

1. SCOPE

1.1 This standard covers insert arrangements for use with MIL-C-38999 and MIL-C-27599 circular connectors.

2. REFERENCED DOCUMENTS

2.1 The issues of the following documents in effect on the date of invitation for bids form a part of this standard to the extent specified herein.

SPECIFICATIONS

MILITARY

MIL-C-38999 - Connectors, Electrical, Circular, Miniature, High Density, Quick Disconnect, Environment Resistannt, Removable Crimp Contacts.
MIL-C-27589 - Connector, Electrical, Miniature, Quick Disconnect (For Weapons Systems) Established Reliability.

(Copies of specifications, standards, drawings and publications required by suppliers in connection with specific procurement functions should be obtained from the procuring activity or as directed by the contracting officer.)

3. DEFINITIONS

3.1 The terms used in this standard are generally accepted by the electrical and electronics industries and commonly used in electrical connector engineering practice.

4. GENERAL REQUIREMENTS

Not applicable.

5. DETAIL REQUIREMENTS

5.1 Dimensions. Dimensions shall be in accordance with the applicable section of this standard and the following dimensional data:

(a) ⌖ Indicates ℄ of insert arrangement.

(b) All dimensions (TP) and in inches.
Dimensions and markings: Front face of pin insert shown (socket insert opposite).

(c) No. 12 contacts — MIL-C-27599 pin contacts .094 ± .001 diameter, socket contacts entry hole (contact sleeve) .090 minimum diameter, number of places as applicable.

MIL-C-28899 - pin contacts .094 ± .001 diameter, socket insert entry hole .102 minimum diameter, number of places as applicable.

(d) No. 16 contacts — MIL-C-27599 - pin contacts .0625 ± .0010 diameter, socket contacts entry hole (contact sleeve) .067 minimum diameter, number of places as applicable.

MIL-C-26999 - pin contacts .0625 ± .0010 diameter, socket insert entry hole .071 minimum diameter, number of places as applicable.

(e) No. 20 contacts — MIL-C-27599 - pin contacts .040 ± .001 diameter, socket contacts entry hole (contact sleeve) .045 minimum diameter, number of places as applicable.

MIL-C-38999 - pin contacts .040 ± .001 diameter, socket insert entry hole .040 minimum diameter, number of places as applicable.

(f) No. 22 and 22M contacts — MIL-C-27599 - pin contacts .0300 ± .0005 diameter, socket contacts entry hole (contact sleeve) .036 minimum diameter, number of places as applicable.

MIL-C-38999 - pin contacts .0320 ± .0005 diameter, socket insert entry hole .035 minimum diameter, number of places as applicable.

(g) No. 22 D contact — MIL-C-38999 - pin contacts .0300 ± .0005 diameter, socket insert entry hole .035 minimum diameter, number of places as applicable.

(h) No. 8 coaxial contacts — MIL-C-38999 - pin contacts .218 ± .001 diameter, socket insert entry hole .227 minimum diameter, number of places as applicable.

(i) Gage features for receptacle connectors shall be .002 smaller than H at MMC, and .006 smaller than GG at MMC. [⊕ | H-.002 Ⓜ | GG-.006 Ⓜ | SEE NOTE]

(j) Gage features for plug connectors shall be .002 larger than W at MMC and .006 larger than GG at MMC.

NOTE:

(a) [.004 DIA Ⓜ] For MIL-C-27599 connectors; this requirement pertains to the pin contacts and the socket entry holes (contact sleeve).

(b) [.015 DIA Ⓜ] For MIL-C-38999 connectors; this requirement pertains to the closed entry hole of the socket contacts.

(c) [.024 DIA Ⓜ] For MIL-C-38999 connectors; this requirement pertains to the tip of the pin contact.

5.2 Marking. Marking shall be in accordance with MIL-C-38999, MIL-C-27599, and as shown in the applicable section of this military standard.

5.3 Drawing notes. The following information is applicable to all figures of this military standard .

(a) Dimensions are in inches.

(b) Metric equivalents (to the nearest .01 mm) are given for general information only and are based upon 1 inch = 25.4 mm.

Custodians:
Army - EL
Navy - AS
Air Force -85

Review activities:
Army - MU, MI
Navy - EC, MC, OS
Air Force -11, 15, 17, 80
DSA -ES

Preparing activity:
Air Force -85

(Project 5935-2005-76)

SECTION 100

INSERT ARRANGEMENTS, ELECTRICAL CONNECTORS, SERIES I, FOR MIL-C-38999 AND MIL-C-27599

SECTION		Page
101A	Insert Arrangement, Electrical Connector, Shell Size 9 - - - - - - - - - -	101.1
102A	Insert Arrangement, Electrical Connector, Shell Size 11 - - - - - - - - - -	102.1
103A	Insert Arrangement, Electrical Connector, Shell Size 13 - - - - - - - - - -	103.1
104A	Insert Arrangement, Electrical Connector, Shell Size 15 - - - - - - - - - -	104.1
105A	Insert Arrangement, Electrical Connector, Shell Size 17 - - - - - - - - - -	105.1
106A	Insert Arrangement, Electrical Connector, Shell Size 19 - - - - - - - - - -	106.1
107A	Insert Arrangement, Electrical Connector, Shell Size 21 - - - - - - - - - -	107.1
108A	Insert Arrangement, Electrical Connector, Shell Size 23 - - - - - - - - - -	108.1
109A	Insert Arrangement, Electrical Connector, Shell Size 25 - - - - - - - - - -	109.1

SECTION 101

INSERT ARRANGEMENT, ELECTRICAL CONNECTOR

SHELL SIZE 9

INCHES	MM
.018	.46
.056	1.42
.079	2.01

(Applicable to MIL-C-27599 only)

Shell size	Arrange-ment No.	Number of contacts	Size contacts	Service rating	Contact location	Supersedes document
9	-3	3	20	M	All	MS20049-3

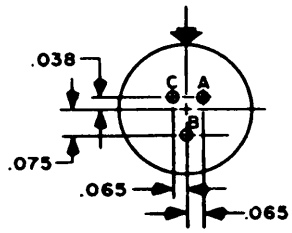

INCHES	MM
.038	.97
.065	1.65
.075	2.01

Shell size	Arrange-ment No.	Number of contacts	Size contacts	Service rating	Contact location	Supersedes document
9	-98	3	20	I	All	MS20049-98

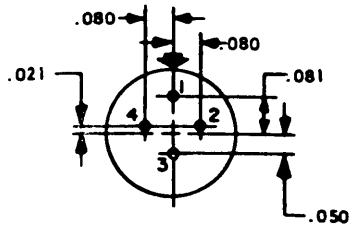

INCHES	MM
.021	.53
.050	1.27
.080	2.03
.081	2.06

(Inactive for new design for MIL-C-38999.)

Shell size	Arrange-ment No.	Number of contacts	Size contacts	Service rating	Contact location	Supersedes document
9	-44	4	22	M	All	MS20049-44

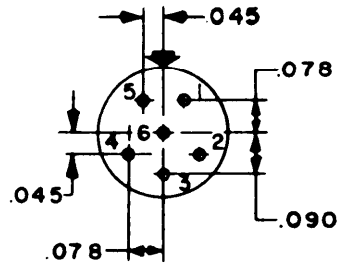

INCHES	MM
.045	1.14
.078	1.98
.090	2.29

(Inactive for new design for MIL-C-38999.)

Shell size	Arrange-ment No.	Number of contacts	Size contacts	Service rating	Contact location	Supersedes document
9	-6	6	22M	M	All	MS20049-6

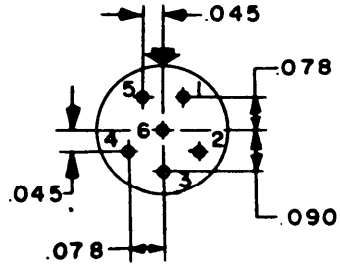

INCHES	MM
.045	1.14
.078	1.98
.090	2.29

(Applicable to MIL-C-38999 only).

Shell size	Arrange-ment No.	Number of contacts	Size contacts	Service rating	Contact location	Supersedes document
9	-35	6	22D	M	All	MS27525-35

SECTION 102

INSERT ARRANGEMENT, ELECTRICAL CONNECTOR

SHELL SIZE 11

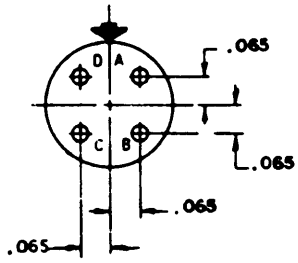

Shell size	Arrange-ment No.	Number of contacts	Size contacts	Service rating	Contact location	Supersedes document
11	-4	4	20	I	All	MS20050-4

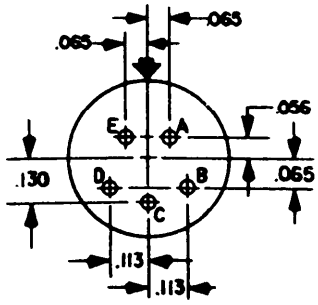

INCHES	MM
.056	1.42
.065	1.65
.113	2.86
.130	3.30

Shell size	Arrange-ment No.	Number of contacts	Size contacts	Service rating	Contact location	Supersedes document
11	-5	5	20	I	All	MS20050-5

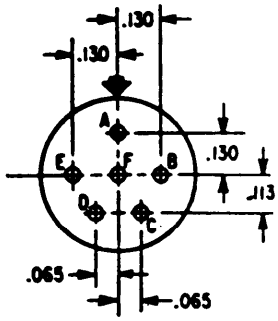

INCHES	MM
.065	1.65
.113	2.87
.130	3.30

Shell size	Arrange-ment No.	Number of contacts	Size contacts	Service rating	Contact location	Supersedes document
11	-98	6	20	I	All	MS20050-98

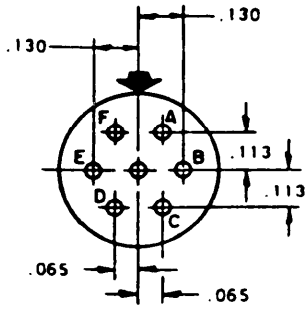

INCHES	MM
.065	1.65
.113	2.87
.130	3.30

Shell size	Arrange-ment No.	Number of contacts	Size contacts	Service rating	Contact location	Supersedes document
11	-99	7	20	I	All	MS20050-99

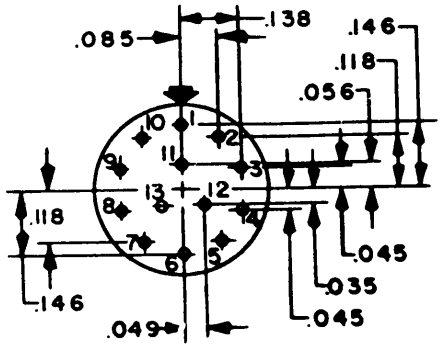

INCHES	MM	INCHES	MM
.035	.89	.085	2.16
.045	1.14	.118	3.00
.049	1.24	.138	3.51
.056	1.42	.146	3.71

(Inactive for new design for MIL-C-38999.)

Shell size	Arrange-ment No.	Number of contacts	Size contacts	Service rating	Contact location	Supersedes document
11	-13	13	22M	M	All	MS20050-13

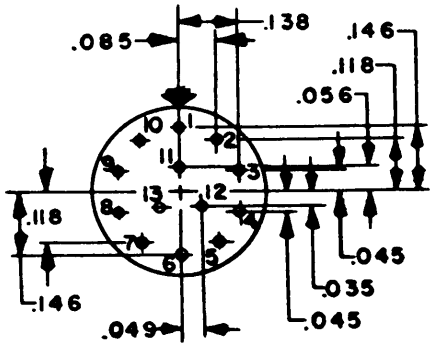

INCHES	MM	INCHES	MM
.035	.89	.085	2.16
.045	1.14	.118	3.00
.049	1.24	.138	3.51
.056	1.42	.146	3.71

(Applicable to MIL-C-38999 only).

Shell size	Arrange-ment No.	Number of contacts	Size contacts	Service rating	Contact location	Supersedes document
11	-35	13	22D	M	All	MS27526-35

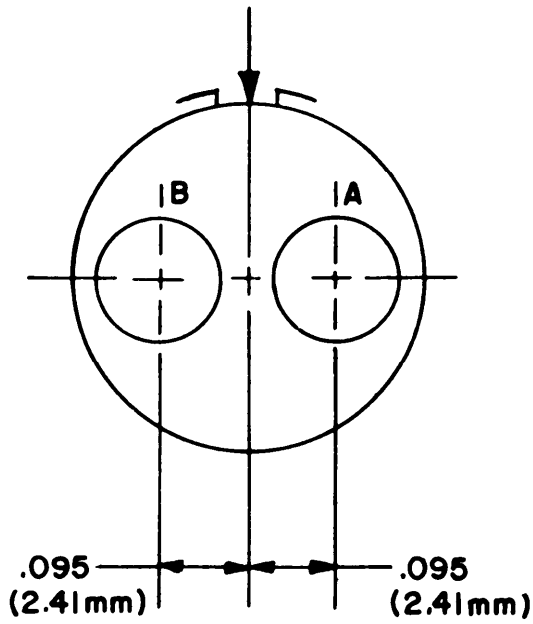

SHELL SIZE	ARRANGE-MENT NO.	NUMBER OF CONTACTS	SIZE CONTACTS	SERVICE RATING	CONTACT LOCATION
11	-2	2	16	I	All

SECTION 103

INSERT ARRANGEMENT, ELECTRICAL CONNECTOR

SHELL SIZE 13

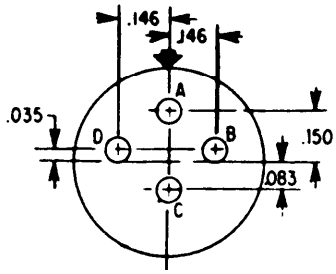

INCHES	MM
.035	.89
.083	2.11
.146	3.71
.150	3.81

Shell size	Arrange-ment No.	Number of contacts	Size contacts	Service rating	Contact location	Supersedes document
13	-4	4	16	I	All	MS20051-4

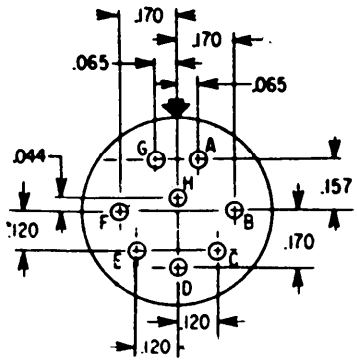

INCHES	MM
.044	1.12
.065	1.65
.120	3.05
.157	3.99
.170	4.32

Shell size	Arrange-ment No.	Number of contacts	Size contacts	Service rating	Contact location	Supersedes document
13	-8	8	20	I	All	MS20051-8

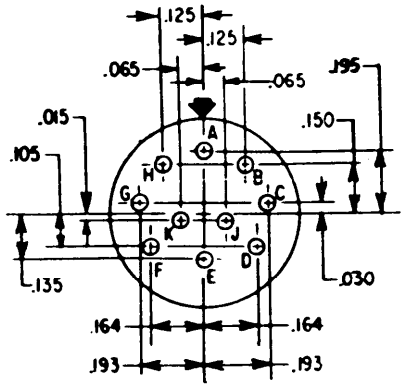

INCHES	MM	INCHES	MM
.015	.38	.135	3.43
.030	.76	.150	3.81
.065	1.65	.164	4.17
.105	2.67	.193	4.90
.125	3.18	.195	4.95

Shell size	Arrange-ment No.	Number of contacts	Size contacts	Service rating	Contact location	Supersedes document
13	-98	10	20	I	All	MS20051-98

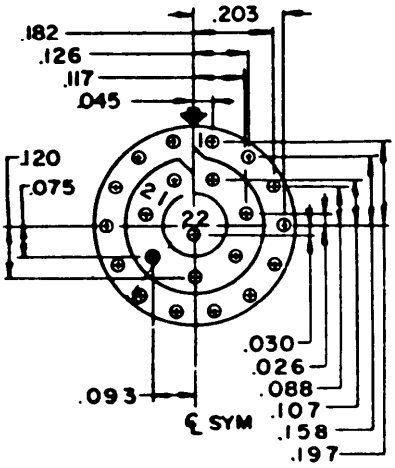

INCHES	MM	INCHES	MM	INCHES	MM
.026	.66	.093	2.36	.158	4.01
.030	.76	.107	2.72	.182	4.62
.045	1.14	.117	2.97	.197	5.00
.075	1.91	.120	3.05	.203	5.16
.088	2.24	.126	3.20		

(Inactive for new design for MIL-C-38999.)

Shell size	Arrange-ment No.	Number of contacts	Size contacts	Service rating	Contact location	Supersedes document
13	-22	22	22M	M	All	MS20051-22

CONTACT LOCATION		
CONT NO.	LOCATION	
	X AXIS	Y AXIS
1	+.045	+.197
2	+.126	+.158
3	+.182	+.088
4	+.203	0
5	+.182	-.088
6	+.126	-.158
7	+.045	-.197
8	-.045	-.197
9	-.126	-.158
10	-.182	-.088
11	-.203	0
12	-.182	+.088
13	-.126	+.158
14	-.045	+.197
15	+.045	+.107
16	+.117	+.026
17	+.093	-.075
18	0	-.120
19	-.093	-.075
20	-.117	+.026
21	-.045	+.107
22	0	-.030

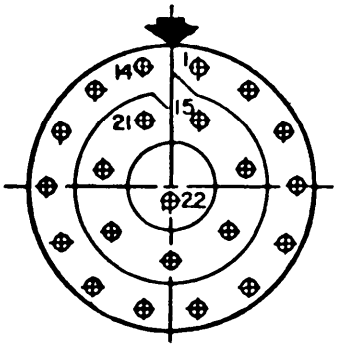

INCHES	MM	INCHES	MM	INCHES	MM
.026	.66	.093	2.36	.158	4.01
.030	.76	.107	2.72	.182	4.62
.045	1.14	.117	2.97	.197	5.00
.075	1.91	.120	3.05	.203	5.16
.088	2.24	.126	3.20		

(Applicable to MIL-C-38999 only.)

Shell size	Arrange-ment No.	Number of contacts	Size contacts	Service rating	Contact location	Supersedes document
13	-35	22	22D	M	All	MS27527-35

SECTION 104

INSERT ARRANGEMENT, ELECTRICAL CONNECTOR

SHELL SIZE 15

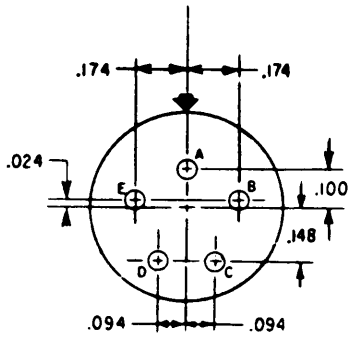

INCHES	MM
.024	.61
.094	2.39
.100	2.54
.148	3.76
.174	4.42

Shell size	Arrange-ment No.	Number of contacts	Size contacts	Service rating	Contact location	Supersedes document
15	-5	5	16	II	All	MS20052-5

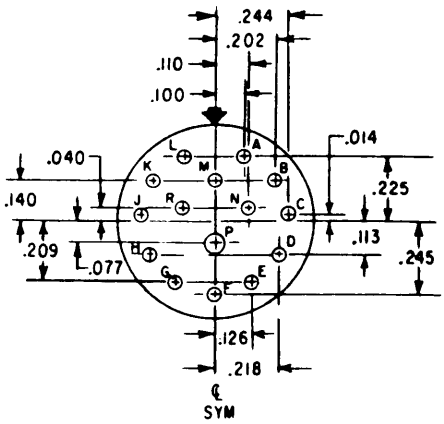

INCHES	MM	INCHES	MM	INCHES	MM
.014	.36	.113	2.87	.218	5.54
.040	1.02	.126	3.20	.225	5.72
.070	1.96	.140	3.56	.244	6.20
.100	2.54	.202	5.13	.245	6.22
.110	2.79	.209	5.31		

Shell size	Arrange-ment No.	Number of contacts	Size contacts	Service rating	Contact location	Supersedes document
15	-15	1	16	I	P	MS20052-15
		14	20		All other	

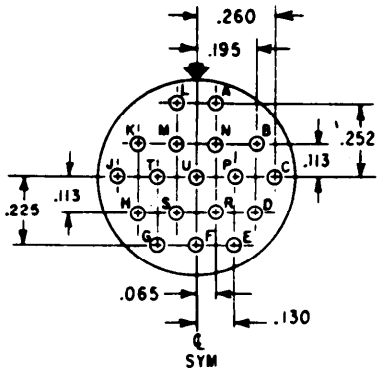

INCHES	MM
.065	1.65
.113	2.87
.130	3.30
.195	4.95
.225	5.72
.252	6.40
.260	6.60

Shell size	Arrange-ment No.	Number of contacts	Size contacts	Service rating	Contact location	Supersedes document
15	-18	18	20	I	All	MS20052-18

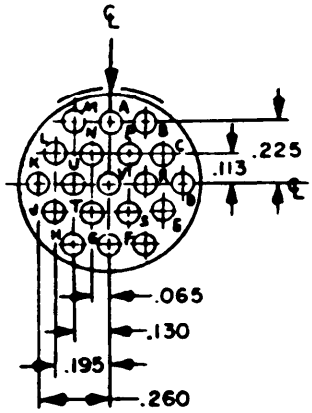

INCHES	MM
.065	1.65
.113	2.87
.130	3.30
.195	4.95
.225	5.72
.260	6.60

Shell size	Arrange-ment No.	Number of contacts	Size contacts	Service rating	Contact location	Supersedes document
15	-19	19	20	I	All	MS20052-19

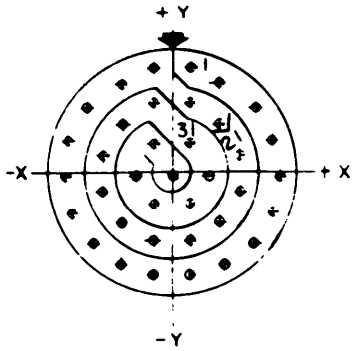

CONTACT LOCATION					
CONTACT NUMBER	LOCATION X AXIS	LOCATION Y AXIS	CONTACT NUMBER	LOCATION X AXIS	LOCATION Y AXIS
1	+045	+262	20	+123	+119
2	+123	+217	21	+170	+040
3	+211	+160	22	+170	-050
4	+254	+080	23	+123	-127
5	+266	-010	24	+045	-172
6	+247	-098	25	-045	-172
7	+200	-175	26	-123	-127
8	+130	-232	27	-170	-050
9	+045	-262	28	-170	+040
10	-045	-262	29	-123	+119
11	-130	-232	30	-045	+172
12	-200	-175	31	+045	+074
13	-247	-098	32	+090	-004
14	-266	-010	33	+045	-082
15	-254	+080	34	-045	-082
16	-211	+160	35	-090	-004
17	-123	+217	36	-045	+074
18	-045	+262	37	000	-004
19	+045	+172			

INCHES	MM	INCHES	MM	INCHES	MM	INCHES	MM
.004	.10	.080	2.03	.127	3.23	.211	5.36
.010	.25	.082	2.08	.130	3.30	.217	5.51
.040	1.02	.090	2.29	.160	4.06	.232	5.89
.045	1.14	.098	2.49	.170	4.32	.247	6.27
.050	1.27	.119	3.02	.172	4.37	.254	6.45
.074	1.88	.123	3.12	.175	4.45	.262	6.65
				.200	5.08	.266	6.76

(Inactive for new design for MIL-C-38999.)

Shell size	Arrange-ment No.	Number of contacts	Size contacts	Service rating	Contact location	Supersedes document
15	-37	37	22M	M	All	MS20052-37

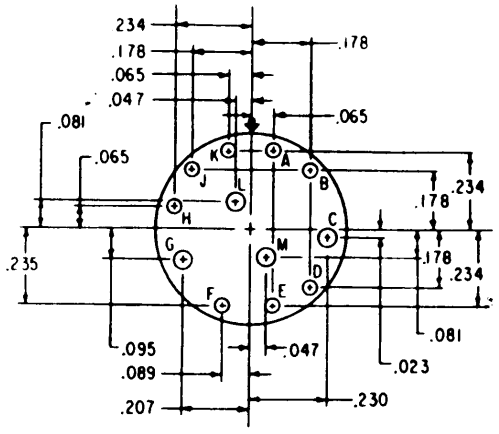

INCHES	MM
.023	.58
.047	1.19
.065	1.65
.081	2.06
.089	2.26
.095	2.41
.178	4.52
.207	5.26
.230	5.84
.234	5.94
.235	5.97

Shell size	Arrangement No.	Number of contacts	Size contacts	Service rating	Contact location	Supersedes document
15	-97	4 8	16 20	I	C,G,L,M All others	MS20052-97

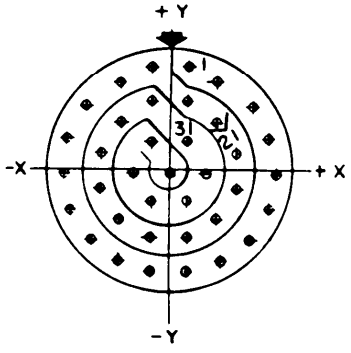

CONTACT LOCATION					
CONTACT NUMBER	LOCATION X AXIS	LOCATION Y AXIS	CONTACT NUMBER	LOCATION X AXIS	LOCATION Y AXIS
1	+.045	+.262	20	+.123	+.119
2	+.123	+.217	21	+.170	+.040
3	+.211	+.160	22	+.170	-.050
4	+.254	+.080	23	+.123	-.127
5	+.266	-.010	24	+.045	-.172
6	+.247	-.098	25	-.045	-.172
7	+.200	-.175	26	-.123	-.127
8	+.130	-.232	27	-.170	-.050
9	+.045	-.262	28	-.170	+.040
10	-.045	-.262	29	-.123	+.119
11	-.130	-.232	30	-.045	+.172
12	-.200	-.175	31	+.045	+.074
13	-.247	-.098	32	+.090	-.004
14	-.266	-.010	33	+.045	-.082
15	-.254	+.080	34	-.045	-.082
16	-.211	+.160	35	-.090	-.004
17	-.123	+.217	36	-.045	+.074
18	-.045	+.262	37	.000	-.004
19	+.045	+.172			

INCHES	MM	INCHES	MM	INCHES	MM	INCHES	MM
.004	.10	.080	2.03	.127	3.23	.211	5.36
.010	.25	.082	2.08	.130	3.30	.217	5.51
.040	1.02	.090	2.29	.160	4.06	.232	5.89
.045	1.14	.098	2.49	.170	4.32	.247	6.27
.050	1.27	.119	3.02	.172	4.37	.254	6.45
.074	1.88	.123	3.12	.175	4.45	.262	6.65
				.200	5.08	.266	6.76

(Applicable to MIL-C-38999 only.)

Shell size	Arrangement No.	Number of contacts	Size contacts	Service rating	Contact location	Supersedes document
15	-35	37	22D	M	All	MS27528-35

SECTION 105

INSERT ARRANGEMENT, ELECTRICAL CONNECTOR

SHELL SIZE 17

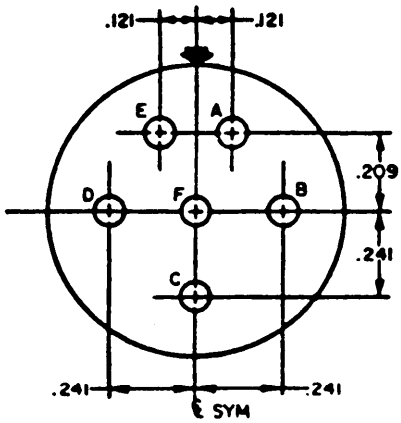

INCHES	MM
.121	3.07
.209	5.31
.241	6.12

Shell size	Arrange-ment No.	Number of contacts	Size contacts	Service rating	Contact location	Supersedes document
17	-6	6	12	I	All	MS20053-6

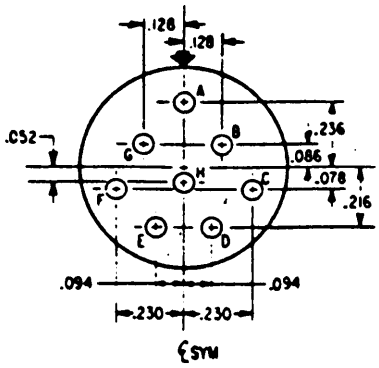

INCHES	MM	INCHES	MM
.052	1.32	.128	3.25
.078	1.98	.216	5.49
.086	2.18	.230	5.84
.094	2.39	.236	5.99

Shell size	Arrange-ment No.	Number of contacts	Size contacts	Service rating	Contact location	Supersedes document
17	-8	8	16	II	All	MS20053-8

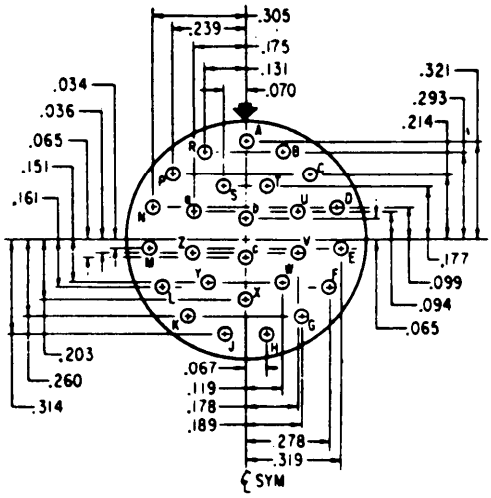

INCHES	MM	INCHES	MM
.034	.86	.099	2.51
.036	.91	.119	3.02
.065	1.65	.131	3.33
.067	1.70	.151	3.84
.070	1.78	.161	4.09
.094	2.39	.175	4.45

INCHES	MM	INCHES	MM
.177	4.50	.260	6.60
.178	4.53	.278	7.06
.189	4.80	.293	7.44
.203	5.16	.305	7.75
.214	5.44	.315	7.98
.239	6.07	.319	8.10
		.321	8.15

Shell size	Arrange-ment No.	Number of contacts	Size contacts	Service rating	Contact location	Supersedes document
17	-26	26	20	I	All	MS20053-26

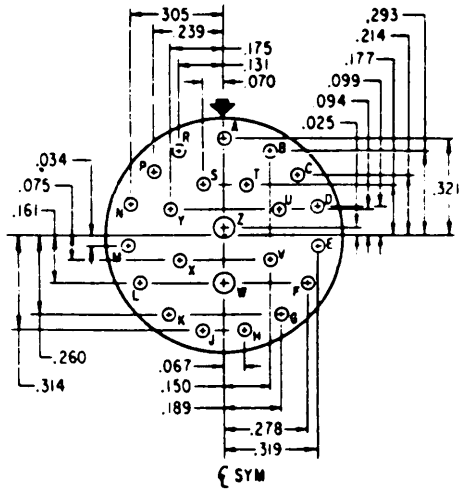

INCHES	MM	INCHES	MM
.025	.64	.094	2.39
.034	.86	.099	2.51
.067	1.70	.131	3.33
.070	1.78	.150	3.81
.075	1.91	.161	4.09

INCHES	MM	INCHES	MM
.175	4.45	.278	7.06
.177	4.50	.293	7.44
.189	4.80	.305	7.75
.214	5.44	.314	7.98
.239	6.07	.319	8.10
.260	6.60	.321	8.15

Shell size	Arrange-ment No.	Number of contacts	Size contacts	Service rating	Contact location	Supersedes document
17	-99	2 21	16 20	I	W,Z All others	MS20053-99

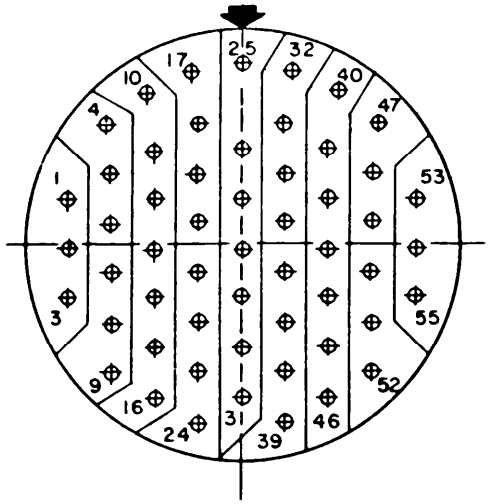

INCHES	MM	INCHES	MM
.004	.10	.094	2.39
.041	1.04	.131	3.33
.049	1.24	.139	3.53
.078	1.98	.156	3.96
.086	2.18	.172	4.37
.089	2.26	.176	4.47

INCHES	MM	INCHES	MM
.184	4.67	.279	7.09
.221	5.61	.312	7.92
.229	5.82	.316	8.03
.234	5.94	.319	8.10
.242	6.15	.321	8.15
.274	6.96	.329	8.36

CONTACT LOCATION					
CONT. NO.	LOCATION X AXIS	LOCATION Y AXIS	CONT. NO.	LOCATION X AXIS	LOCATION Y AXIS
1	−.312	+.086	29	0	−.094
2	−.312	−.004	30	0	−.184
3	−.312	−.094	31	0	−.274
4	−.242	+.221	32	+.089	+.316
5	−.234	+.131	33	+.078	+.221
6	↑	+.041	34	↑	+.131
7		−.049	35		+.041
8	↓	−.139	36		−.049
9	−.234	−.229	37		−.139
10	−.172	+.279	38	↓	−.229
11	−.156	+.176	39	+.078	−.319
12	↑	+.086	40	+.172	+.279
13		−.004	41	+.156	+.176
14		−.094	42	↑	+.086
15	↓	−.184	43		−.004
16	−.156	−.274	44		−.094
17	−.089	+.316	45	↓	−.184
18	−.078	+.221	46	+.156	−.274
19	↑	+.131	47	+.242	+.221
20		+.041	48	+.234	+.131
21		−.049	49	↑	+.041
22		−.139	50		−.049
23	↓	−.229	51	↓	−.139
24	−.078	−.319	52	+.234	−.229
25	0	+.329	53	+.312	+.086
26	0	+.176	54	+.312	−.004
27	0	+.086	55	+.312	−.094
28	0	−.004			

(Applicable to MIL-C-38999 only.)

Shell size	Arrangement No.	Number of contacts	Size contacts	Service rating	Contact location	Supersedes document
17	-35	55	22D	M	All	MS27529-35

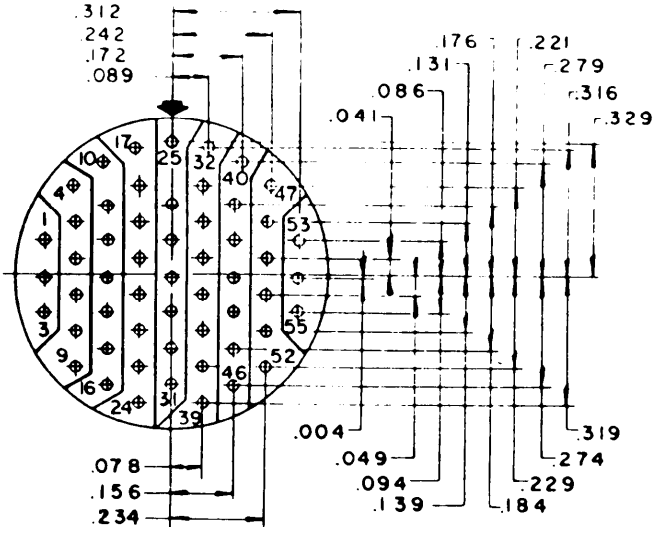

INCHES	MM	INCHES	MM	INCHES	MM	INCHES	MM
.004	.10	.094	2.39	.184	4.67	.279	7.09
.041	1.04	.131	3.33	.221	5.61	.312	7.92
.049	1.24	.139	3.53	.229	5.82	.316	8.03
.078	1.98	.156	3.96	.234	5.94	.319	8.10
.086	2.18	.172	4.37	.242	6.15	.329	8.36
.089	2.26	.176	4.47	.274	6.96		

(Inactive for new design for MIL-C-38999.)

Shell size	Arrange-ment No.	Number of contacts	Size contacts	Service rating	Contact location	Supersedes document
17	-55	55	22M	M	All	MS20053-55

SECTION 106

INSERT ARRANGEMENT, ELECTRICAL CONNECTOR

SHELL SIZE 19

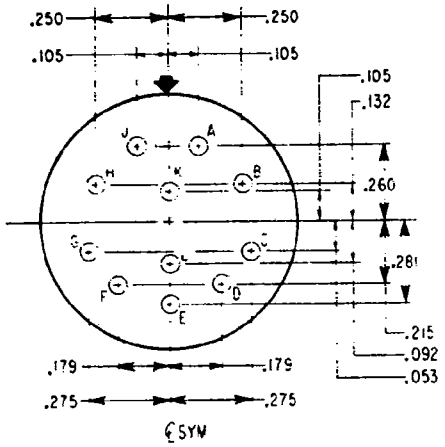

INCHES	MM	INCHES	MM
.053	1.35	.215	5.46
.092	2.34	.250	6.35
.105	2.67	.260	6.60
.132	3.35	.275	6.99
.179	4.55	.281	7.14

Shell size	Arrangement No.	Number of contacts	Size contacts	Service rating	Contact location	Supersedes document
19	-11	11	16	II	All	MS20054-11

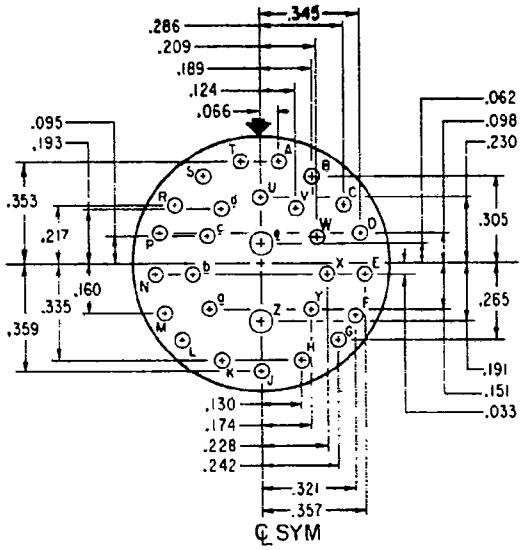

INCHES	MM	INCHES	MM
.033	.84	.151	3.84
.062	1.57	.160	4.06
.066	1.68	.174	4.42
.095	2.41	.189	4.80
.098	2.49	.191	4.85
.124	3.15	.193	4.90
.130	3.30	.209	5.31

INCHES	MM	INCHES	MM
.217	5.51	.321	8.15
.228	5.79	.335	8.51
.230	5.84	.345	8.76
.242	6.15	.353	8.97
.265	6.73	.357	9.07
.286	7.26	.359	9.12
.305	7.75		

Shell size	Arrangement No.	Number of contacts	Size contacts	Service rating	Contact location	Supersedes document
19	-28	2	16	I	e, Z	MS20054-28
		26	20		All others	

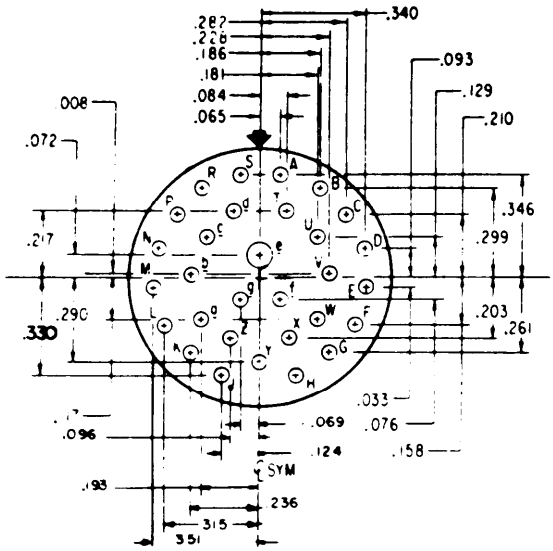

INCHES	MM	INCHES	MM
.008	.20	.093	2.36
.033	.84	.096	2.44
.065	1.65	.117	2.97
.069	1.75	.124	3.15
.072	1.83	.129	3.28
.076	1.93	.158	4.01
.084	2.13	.181	4.60

INCHES	MM	INCHES	MM
.186	4.72	.282	7.16
.193	4.90	.290	7.37
.203	5.16	.299	7.59
.210	5.33	.315	8.00
.217	5.51	.330	8.38
.228	5.79	.340	8.64
.236	5.99	.346	8.79
.261	6.63	.351	8.92

Shell size	Arrangement No.	Number of contacts	Size contacts	Service rating	Contact location	Supersedes document
19	-30	1	16	I	e	MS20054-30
		29	20		All others	

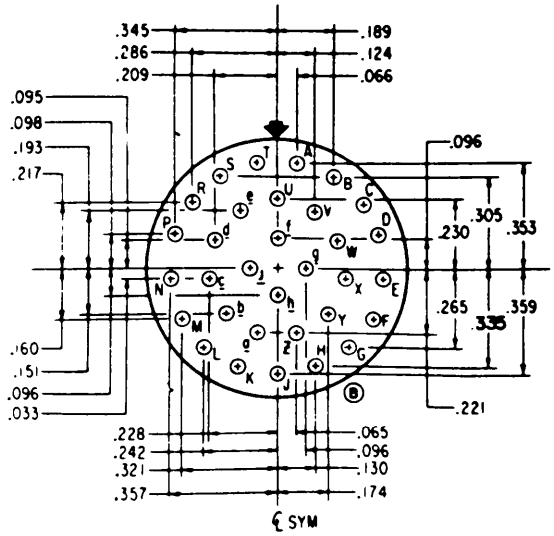

INCHES	MM	INCHES	MM
.033	.84	.130	3.30
.065	1.65	.151	3.84
.066	1.68	.160	4.06
.095	2.41	.174	4.42
.096	2.44	.189	4.80
.098	2.49	.193	4.90
.124	3.15	.209	5.31

INCHES	MM	INCHES	MM
.217	5.51	.305	7.75
.221	5.61	.321	8.15
.228	5.79	.335	8.51
.230	5.84	.345	8.76
.242	6.15	.353	8.97
.265	6.73	.357	9.07
.286	7.26	.359	9.12

Shell size	Arrangement No.	Number of contacts	Size contacts	Service rating	Contact location	Supersedes document
19	-32	32	20	I	All	MS20054-32

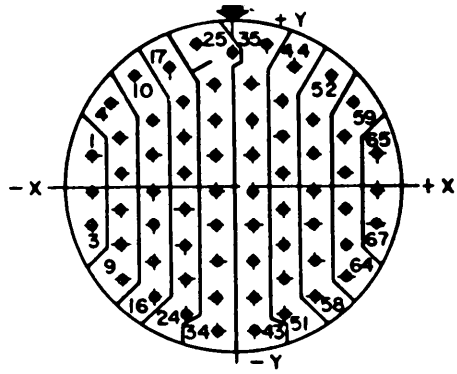

CONTACT LOCATION								
CONTACT NUMBER	LOCATION X AXIS	LOCATION Y AXIS	CONTACT NUMBER	LOCATION X AXIS	LOCATION Y AXIS	CONTACT NUMBER	LOCATION X AXIS	LOCATION Y AXIS
1	-.357	+.081	24	-.123	-.324	47	+.123	+.036
2	-.357	-.009	25	-.088	+.360	48	+.123	-.054
3	-.357	-.099	26	-.000	+.339	49	+.123	-.144
4	-.304	+.213	27	-.045	+.261	50	+.123	-.234
5	-.279	+.126	28	-.045	+.171	51	+.123	-.324
6	-.279	+.036	29	-.045	+.081	52	+.244	+.280
7	-.279	-.054	30	-.045	-.009	53	+.201	+.171
8	-.279	-.144	31	-.045	-.099	54	+.201	+.081
9	-.279	-.234	32	-.045	-.189	55	+.201	-.009
10	-.244	+.280	33	-.045	-.279	56	+.201	-.099
11	-.201	+.171	34	-.045	-.369	57	+.201	-.189
12	-.201	+.081	35	+.088	+.360	58	+.201	-.279
13	-.201	-.009	36	+.045	+.261	59	+.304	+.213
14	-.201	-.099	37	+.045	+.171	60	+.279	+.126
15	-.201	-.189	38	+.045	+.081	61	+.279	+.036
16	-.201	-.279	39	+.045	-.009	62	+.279	-.054
17	-.156	+.301	40	+.045	-.099	63	+.279	-.144
18	-.123	+.216	41	+.045	-.189	64	+.279	-.234
19	-.123	+.126	42	+.045	-.279	65	+.357	+.081
20	-.123	+.036	43	+.045	-.369	66	+.357	-.009
21	-.123	-.054	44	+.156	+.301	67	+.357	-.099
22	-.123	-.144	45	+.123	+.216			
23	-.123	-.234	46	+.123	+.126			

INCHES	MM	INCHES	MM	INCHES	MM	INCHES	MM
.009	.23	.123	3.12	.213	5.41	.301	7.65
.036	.91	.126	3.20	.216	5.49	.304	7.72
.045	1.14	.144	3.66	.234	5.94	.324	8.23
.054	1.37	.156	3.96	.244	6.20	.357	9.07
.081	2.06	.171	4.34	.261	6.63	.360	9.14
.088	2.24	.189	4.80	.279	7.09	.369	9.37
.099	2.51	.201	5.11	.280	7.11		

(Inactive for new design for MIL-C-38999.)

Shell size	Arrangement No.	Number of contacts	Size contacts	Service rating	Contact location	Supersedes document
19	-67	67	22M	M	All	MS20054-67

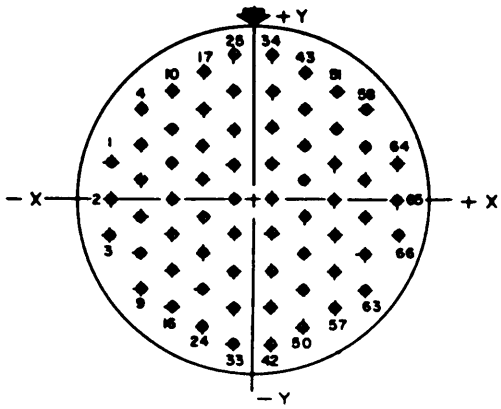

INCHES	MM
.123	3.12
.201	5.11
.279	7.09
.315	8.00
.357	9.07
.360	9.14

CONTACT LOCATION

CONT NO.	LOCATION X AXIS	LOCATION Y AXIS	CONT NO.	LOCATION X AXIS	LOCATION Y AXIS	CONT NO.	LOCATION X AXIS	LOCATION Y AXIS
1	-.357	+.090	24	-.123	-.315	47	+.123	-.045
2	-.357	0	25	-.045	+.360	48	+.123	-.135
3	-.357	-.090	26	-.045	+.270	49	+.123	-.225
4	-.279	+.225	27	-.045	+.180	50	+.123	-.315
5	-.279	+.135	28	-.045	+.090	51	+.201	+.270
6	-.279	+.045	29	-.045	0	52	+.201	+.180
7	-.279	-.045	30	-.045	-.090	53	+.201	+.090
8	-.279	-.135	31	-.045	-.180	54	+.201	0
9	-.279	-.225	32	-.045	-.270	55	+.201	-.090
10	-.201	+.270	33	-.045	-.360	56	+.201	-.180
11	-.201	+.180	34	+.045	+.360	57	+.201	-.270
12	-.201	-.090	35	+.045	+.270	58	+.279	+.225
13	-.201	0	36	+.045	+.180	59	+.279	+.135
14	-.201	-.090	37	+.045	+.090	60	+.279	+.045
15	-.201	-.180	38	+.045	0	61	+.279	-.045
16	-.201	-.270	39	+.045	-.090	62	+.279	-.135
17	-.123	+.315	40	+.045	-.180	63	+.279	-.225
18	-.123	+.225	41	+.045	-.270	64	+.357	+.090
19	-.123	+.135	42	+.045	-.360	65	+.357	0
20	-.123	+.045	43	+.123	+.315	66	+.357	-.090
21	-.123	-.045	44	+.123	+.225			
22	-.123	-.135	45	+.123	+.135			
23	-.123	-.225	46	+.123	+.045			

(Applicable to MIL-C-38999 only.)

Shell size	Arrangement No.	Number of contacts	Size contacts	Service rating	Contact location	Supersedes document
19	-35	66	22D	M	All	MS27530-35

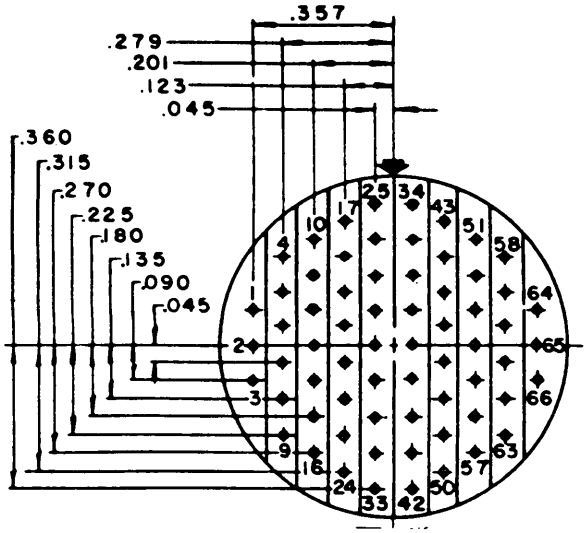

INCHES	MM	INCHES	MM
.045	1.14	.180	4.57
.090	2.29	.201	5.11
.123	3.12	.225	5.72
.135	3.43	.270	6.86

INCHES	MM
.279	7.09
.315	8.00
.357	9.07
.360	9.14

(Inactive for new design for MIL-C-38999.)

Shell size	Arrangement No.	Number of contacts	Size contacts	Service rating	Contact location	Supersedes document
19	-66	66	22M	M	All	MS20054-66

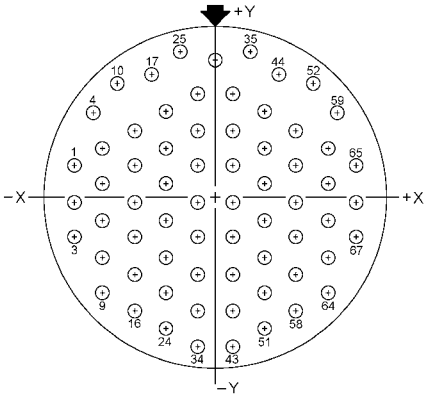

CONTACT LOCATION								
CONT NO.	LOCATION		CONT NO.	LOCATION		CONT NO.	LOCATION	
	X AXIS	Y AXIS		X AXIS	Y AXIS		X AXIS	Y AXIS
1	- .357	+ .081	24	- .123	- .324	47	+ .123	+ .036
2	- .357	- .009	25	- .068	+ .360	48	+ .123	- .054
3	- .357	- .099	26	0	+ .339	49	+ .123	- .144
4	- .304	+ .213	27	- .045	+ .261	50	+ .123	- .234
5	- .279	+ .126	28	- .045	+ .171	51	+ .123	- .324
6	- .279	+ .036	29	- .045	+ .061	52	+ .244	+ .280
7	- .279	- .054	30	- .045	- .009	53	+ .201	+ .171
8	- .279	- .144	31	- .045	- .099	54	+ .201	+ .061
9	- .279	- .234	32	- .045	- .169	55	+ .201	- .009
10	- .244	+ .280	33	- .045	- .279	56	+ .201	- .099
11	- .201	+ .171	34	- .045	- .369	57	+ .201	-. 189
12	- .201	+ .081	35	+ .086	+ .360	58	+ .201	- .279
13	- .201	- .009	36	+ .045	+ .261	59	+ .304	+ .213
14	- .201	- .099	37	+ .045	+ .171	60	+ .279	+ .126
15	- .201	- .189	38	+ .045	+ .061	61	+ .279	+ .036
16	- .201	- .279	39	+ .045	- .009	62	+ .279	- .054
17	- .156	+ .301	40	+ .045	- .099	63	+ .279	- .144
18	- .123	+ .216	41	+ .045	- .169	64	+ .279	- .234
19	- .123	+ .126	42	+ .045	- .279	65	+ .357	+ .081
20	- .123	+ .036	43	+ .045	- .369	66	+ .357	- .009
21	- .123	- .054	44	+ .156	+ .301	67	+ .357	- .099
22	- .123	- .144	45	+ .123	+ .216			
23	- .123	- .234	46	+ .123	+ .126			

INCHES	MM	INCHES	MM	INCHES	MM	INCHES	MM
.009	.23	.123	3.12	.213	5.41	.301	7.65
.036	.91	.126	3.20	.216	5.49	.304	7.72
.045	1.14	.144	3.66	.234	5.94	.324	8.23
.054	1.39	.156	3.96	.244	6.20	.339	8.61
.081	2.06	.171	4.34	.261	6.63	.357	9.07
.088	2.24	.189	4.80	.279	7.09	.360	9.14
.099	2.51	.201	5.11	.280	7.11	.369	9.37

(Applicable to MIL-C-38999 only).

Shell Size	Arrangement No.	Number of Contacts	Size of Contacts	Service Rating	Contact Location	Supersedes Document
19	- 45	67	22 D	M	All	MS27530-45

SECTION 107

INSERT ARRANGEMENT, ELECTRICAL CONNECTOR

SHELL SIZE 21

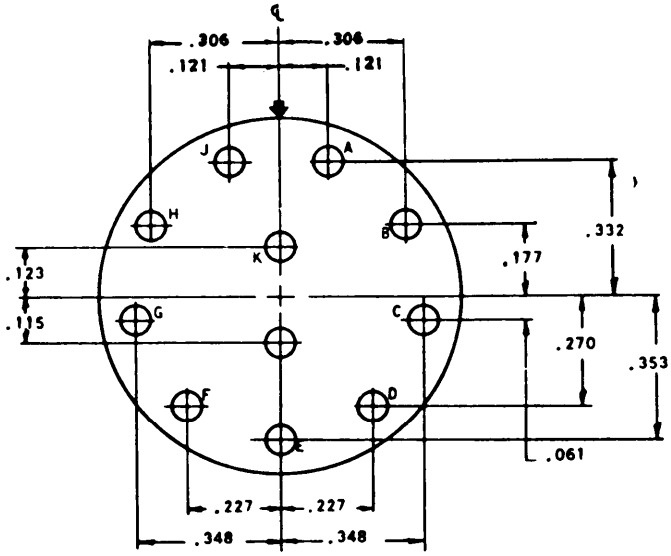

INCHES	MM	INCHES	MM
.061	1.55	.227	5.77
.115	2.92	.270	6.86
.121	3.07	.306	7.77
.123	3.12	.332	8.43
.177	4.50	.348	8.84
		.353	8.97

Shell size	Arrange-ment No.	Number of contacts	Size contacts	Service rating	Contact location	Supersedes document
21	-11	11	12	I	All	MS20055-11

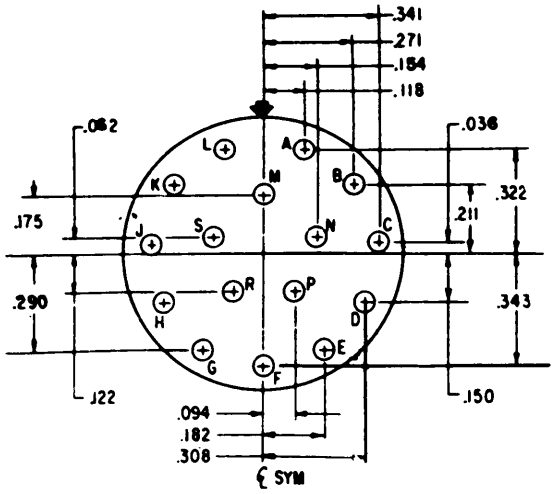

INCHES	MM	INCHES	MM
.036	.91	.150	3.81
.062	1.57	.154	3.91
.094	2.39	.175	4.45
.118	3.00	.182	4.62
.122	3.10	.211	5.36

INCHES	MM
.271	6.88
.290	7.37
.308	7.82
.322	8.18
.341	8.66
.343	8.71

Shell size	Arrange-ment No.	Number of contacts	Size contacts	Service rating	Contact location	Supersedes document
21	-16	16	16	II	All	MS20055-16

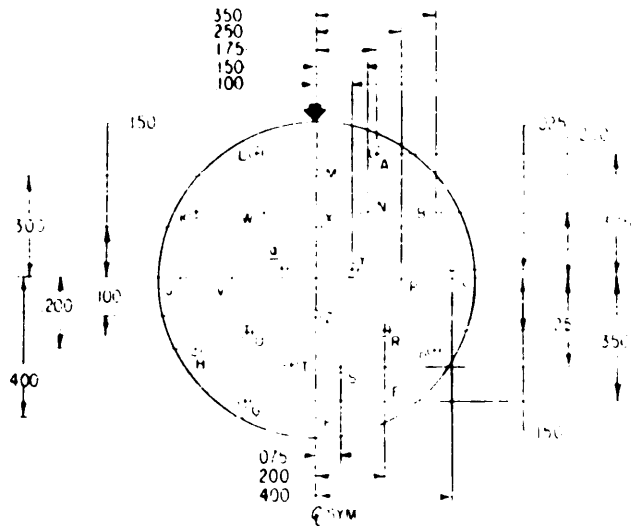

INCHES	MM	INCHES	MM
.025	.64	.200	5.08
.075	1.88	.250	5.59
.100	2.54	.300	7.62
.150	3.81	.350	8.89
.175	4.45	.375	9.53
		.400	10.16

Shell size	Arrange-ment No.	Number of contacts	Size contacts	Service rating	Contact location	Supersedes document
21	-24	24	20	I	All	MS20055-24

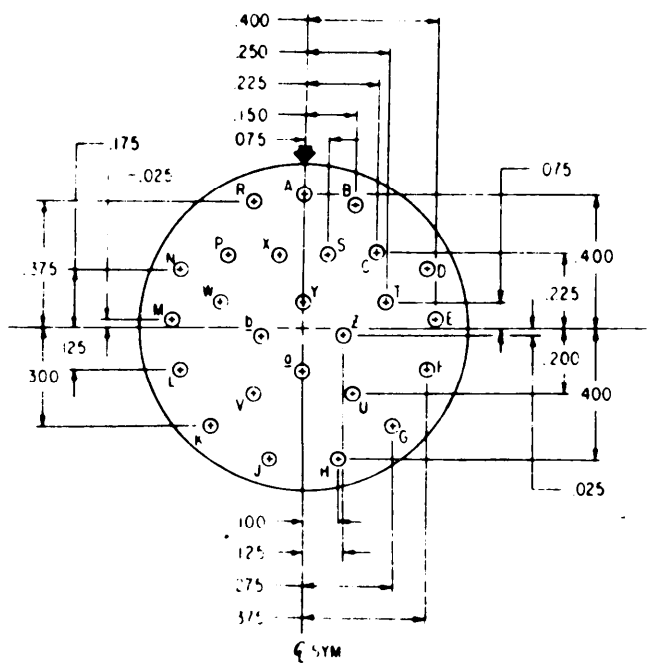

INCHES	MM	INCHES	MM
.025	.64	.150	3.81
.075	1.91	.175	4.45
.100	2.54	.200	5.08
.125	3.18	.225	6.72

INCHES	MM
.250	6.35
.275	6.99
.300	7.62
.375	9.53
.400	10.16

Shell size	Arrange-ment No.	Number of contacts	Size contacts	Service rating	Contact location	Supersedes document
21	-25	25	20	I	All	MS20055-25

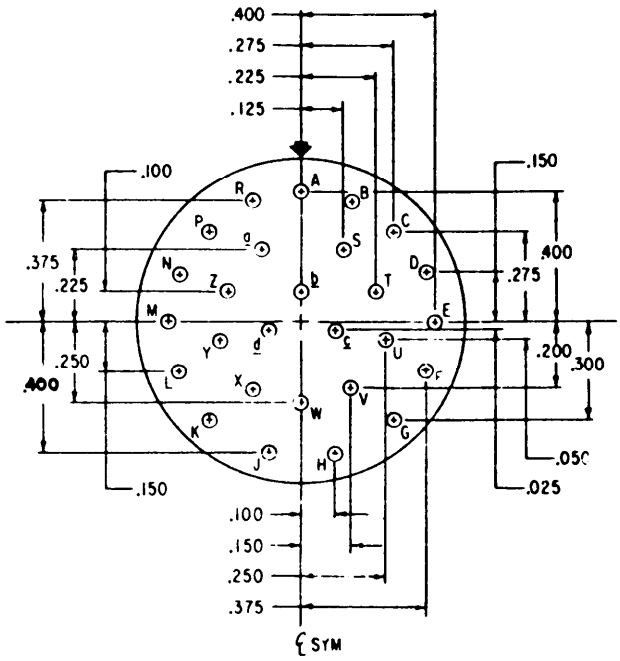

INCHES	MM	INCHES	MM
.025	.64	.200	5.08
.075	1.91	.250	6.35
.100	2.54	.300	7.62
.150	3.81	.350	8.89
.175	4.45	.375	9.53
		.400	10.16

Shell size	Arrange-ment No.	Number of contacts	Size contacts	Service rating	Contact location	Supersedes document
21	-27	27	20	I	All	MS20055-27

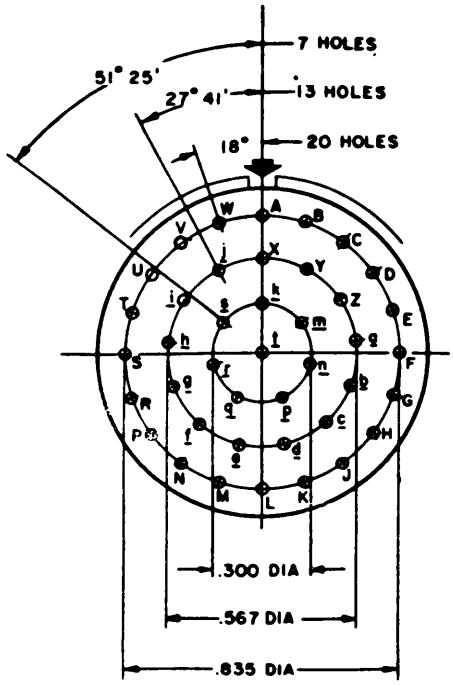

INCHES	MM
.300	7.62
.567	14.40
.835	21.21

Shell size	Arrange-ment No.	Number of contacts	Size contacts
21	-41	41	20

Service rating	Contact location	Supersedes document
I	All	MS20055-41

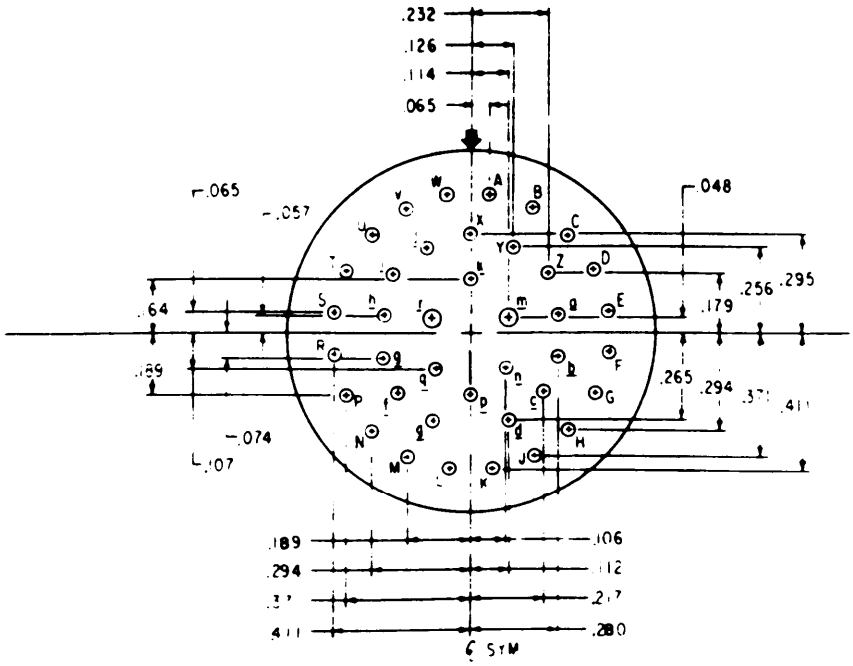

INCHES	MM	INCHES	MM	INCHES	MM
.048	1.22	.114	2.90	.256	6.50
.057	1.45	.126	3.20	.265	6.73
.065	1.65	.164	4.17	.280	7.11
.074	1.88	.179	4.55	.294	7.47
.106	2.69	.189	4.80	.295	7.49
.107	2.72	.217	5.51	.371	9.42
.112	2.84	.232	5.89	.411	10.44

Shell size	Arrangement No.	Number of contacts	Size contacts	Service rating	Contact location	Supersedes document
21	-39	2	16	I	r, m	MS20055-39
		37	20		All others	

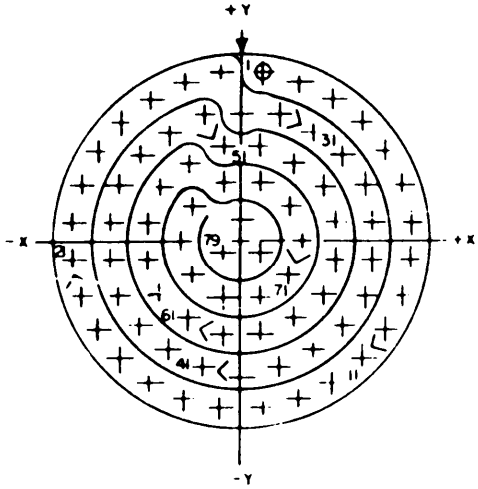

CONTACT HOLE LOCATION			CONTACT HOLE LOCATION		
CONTACT NUMBER	LOCATION X AXIS	LOCATION Y AXIS	CONTACT NUMBER	LOCATION X AXIS	LOCATION Y AXIS
1	+.053	+.426	41	-.098	-.322
2	+.146	+.404	42	-.184	-.280
3	+.232	+.362	43	-.258	-.220
4	+.306	+.302	44	-.311	-.141
5	+.365	+.227	45	-.332	-.048
6	+.406	+.141	46	-.332	+.048
7	+.427	+.048	47	-.311	+.141
8	+.427	-.048	48	-.258	+.220
9	+.406	-.141	49	-.184	+.280
10	+.365	-.227	50	-.098	+.322
11	+.306	-.302	51	-.048	+.241
12	+.232	-.362	52	+.048	+.241
13	+.146	-.404	53	+.134	+.199
14	+.053	-.426	54	+.208	+.139
15	-.053	-.426	55	+.237	+.048
16	-.146	-.404	56	+.237	-.048
17	-.232	-.362	57	+.208	-.139
18	-.306	-.302	58	+.134	-.199
19	-.365	-.227	59	+.048	-.241
20	-.406	-.141	60	-.048	-.241
21	-.427	-.048	61	-.134	-.199
22	-.427	+.048	62	-.208	-.139
23	-.406	+.141	63	-.237	-.048
24	-.365	+.227	64	-.237	+.048
25	-.306	+.302	65	-.208	+.139
26	-.232	+.362	66	-.134	+.199
27	-.146	+.404	67	-.048	+.146
28	-.053	+.426	68	+.048	+.146
29	.000	+.323	69	+.125	+.090
30	+.098	+.322	70	+.155	.000
31	+.184	+.280	71	+.125	-.090
32	+.258	+.220	72	+.048	-.146
33	+.311	+.141	73	-.048	-.146
34	+.332	+.048	74	-.125	-.090
35	+.332	-.048	75	-.155	.000
36	+.311	-.141	76	-.125	+.090
37	+.258	-.220	77	.000	+.053
38	+.184	-.280	78	+.048	-.029
39	+.098	-.322	79	-.048	-.029
40	.000	-.347			

INCHES	MM	INCHES	MM	INCHES	MM	INCHES	MM
.029	.74	.141	3.58	.232	5.89	.323	8.20
.048	1.22	.146	3.71	.237	6.02	.332	8.43
.053	1.35	.155	3.94	.241	6.12	.347	8.18
.090	2.29	.184	4.67	.258	6.55	.362	9.19
.098	2.49	.199	5.05	.280	7.11	.365	9.27
.125	3.18	.208	5.28	.302	7.67	.404	10.26
.134	3.40	.220	5.59	.306	7.77	.406	10.31
.139	3.53	.227	5.77	.311	7.90	.426	10.82
				.322	8.18	.427	10.85

(Inactive for new design for MIL-C-38999.)

Shell size	Arrangement No.	Number of contacts	Size contacts	Service rating	Contact location	Supersedes document
21	-1	79	22M	M	79	MS20055-1

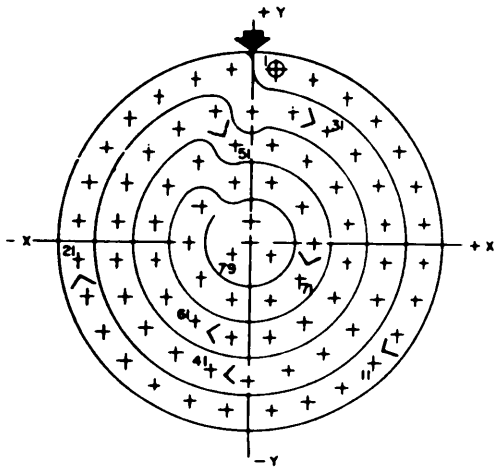

CONTACT LOCATION

CONTACT NUMBER	LOCATION X AXIS	LOCATION Y AXIS	CONTACT NUMBER	LOCATION X AXIS	LOCATION Y AXIS
1	+.053	+.426	41	-.098	-.322
2	+.146	+.404	42	-.184	-.280
3	+.232	+.362	43	-.258	-.220
4	+.306	+.302	44	-.311	-.141
5	+.365	+.227	45	-.332	-.048
6	+.406	+.141	46	-.332	+.048
7	+.427	+.048	47	-.311	+.141
8	+.427	-.048	48	-.258	+.220
9	+.406	-.141	49	-.184	+.280
10	+.365	-.227	50	-.098	+.322
11	+.306	-.302	51	-.048	+.241
12	+.232	-.362	52	+.048	+.241
13	+.146	-.404	53	+.134	+.199
14	+.053	-.426	54	+.208	+.139
15	-.053	-.426	55	+.237	+.048
16	-.146	-.404	56	+.237	-.048
17	-.232	-.362	57	+.208	-.139
18	-.306	-.302	58	+.134	-.199
19	-.365	-.227	59	+.048	-.241
20	-.406	-.141	60	-.048	-.241
21	-.427	-.048	61	-.134	-.199
22	-.427	+.048	62	-.208	-.139
23	-.406	+.141	63	-.237	-.048
24	-.365	+.227	64	-.237	+.048
25	-.306	+.302	65	-.208	+.139
26	-.232	+.362	66	-.134	+.199
27	-.146	+.404	67	-.048	+.146
28	-.053	+.426	68	+.048	+.146
29	000	+.323	69	+.125	+.090
30	+.098	+.322	70	+.155	000
31	+.184	+.280	71	+.125	-.090
32	+.258	+.220	72	+.048	-.146
33	+.311	+.141	73	-.048	-.146
34	+.332	+.048	74	-.125	-.090
35	+.332	-.048	75	-.155	000
36	+.311	-.141	76	-.125	+.090
37	+.258	-.220	77	000	+.053
38	+.184	-.280	78	+.048	-.029
39	+.098	-.322	79	-.048	-.029
40	000	-.347			

INCHES	MM	INCHES	MM	INCHES	MM	INCHES	MM	INCHES	MM
.029	.74	.139	3.53	.220	5.59	.302	7.67	.362	9.19
.048	1.22	.141	3.58	.227	5.77	.306	7.77	.365	9.27
.053	1.35	.146	3.71	.232	5.89	.311	7.90	.404	10.26
.090	2.29	.155	3.94	.237	6.02	.322	8.18	.406	10.31
.098	2.49	.184	4.67	.241	6.12	.323	8.20	.426	10.82
.125	3.18	.199	5.05	.258	6.55	.332	8.43	.427	10.85
.134	3.40	.208	5.28	.280	7.11	.347	8.81		

(Applicable to MIL-C-38999 only.)

Shell size	Arrange-ment No.	Number of contacts	Size contacts	Service rating	Contact location	Supersedes document
21	-35	79	22D	M	All	MS27531-35

SECTION 108

INSERT ARRANGEMENT, ELECTRICAL CONNECTOR

SHELL SIZE 23

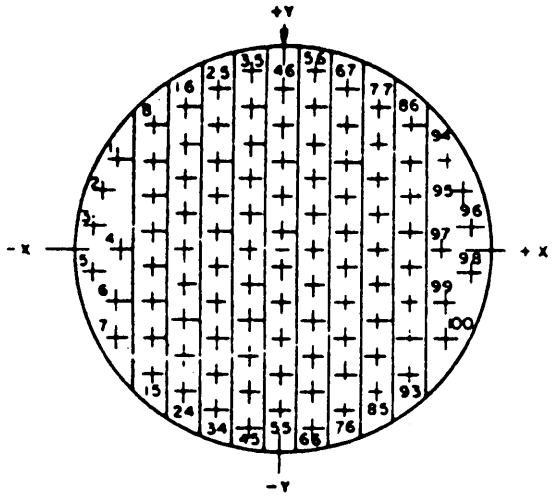

INCHES	MM	INCHES	MM	INCHES	MM
.047	1.19	.166	4.22	.333	8.46
.048	1.22	.190	4.83	.380	9.65
.061	1.55	.237	6.02	.415	10.54
.083	2.11	.238	6.05	.427	10.85
.095	2.41	.241	6.12	.428	10.87
.142	3.61	.249	6.32	.467	11.86
.143	3.63	.285	7.24	.475	12.07
.154	3.91	.332	8.43	.488	12.40

CONTACT HOLE LOCATION			CONTACT HOLE LOCATION		
CONTACT NUMBER	LOCATION X AXIS	LOCATION Y AXIS	CONTACT NUMBER	LOCATION X AXIS	LOCATION Y AXIS
1	-.428	+.241	51	[illegible]	[illegible]
2	-.467	+.154	52		[illegible]
3	-.488	+.061	53		[illegible]
4	-.415	.000	54		[illegible]
5	-.488	-.061	55		[illegible]
6	-.428	-.142	56	-.083	[illegible]
7	-.428	-.237	57		[illegible]
8	-.332	+.333	58		[illegible]
9		+.238	59		[illegible]
10		+.143	60		[illegible]
11		+.048	61		[illegible]
12		-.047	62		[illegible]
13		-.142	63		[illegible]
14		-.237	64		[illegible]
15		-.332	65		[illegible]
16	-.249	+.380	66		[illegible]
17		+.285	67	-.166	[illegible]
18		+.190	68		[illegible]
19		+.095	69		[illegible]
20		.000	70		[illegible]
21		-.095	71		[illegible]
22		-.190	72		[illegible]
23		-.285	73		[illegible]
24		-.380	74		[illegible]
25	-.166	+.428	75		[illegible]
26		+.333	76		[illegible]
27		+.238	77	+.249	[illegible]
28		+.143	78		[illegible]
29		+.048	79		[illegible]
30		-.047	80		[illegible]
31		-.142	81		[illegible]
32		-.237	82		[illegible]
33		-.332	83		[illegible]
34		-.427	84		[illegible]
35	-.083	+.475	85		[illegible]
36		+.380	86	+.332	[illegible]
37		+.285	87		[illegible]
38		+.190	88		[illegible]
39		+.095	89		[illegible]
40		.000	90		[illegible]
41		-.095	91		[illegible]
42		-.190	92		[illegible]
43		-.285	93		[illegible]
44		-.380	94	+.428	[illegible]
45		-.475	95	+.467	+.154
46	.000	+.428	96	+.488	+.061
47		+.333	97	+.415	.000
48		+.238	98	+.488	-.061
49		+.143	99	+.428	-.142
50		+.048	100	+.428	-.237

(Inactive for new design for MIL-C-38999.)

Shell size	Arrangement No.	Number of contacts	Size contacts	Service rating	Contact location	Supersedes document
23	-1	100	22M	M	All	MS20056-1

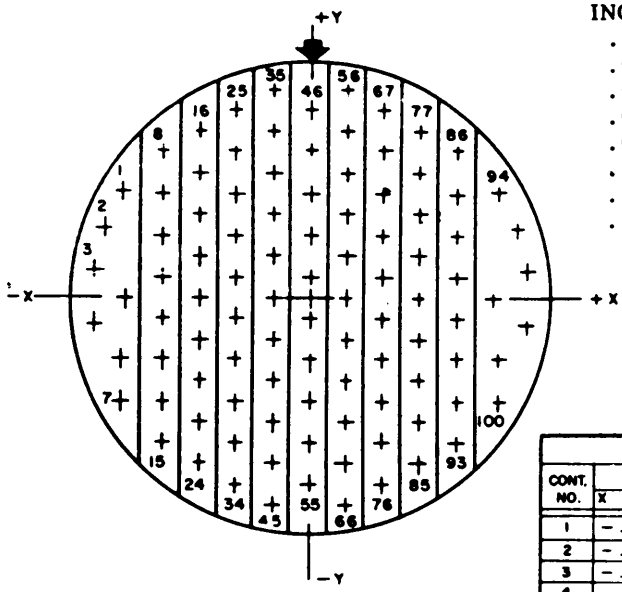

INCHES	MM	INCHES	MM	INCHES	MM
.047	1.19	.166	4.22	.333	8.46
.048	1.22	.190	4.83	.380	9.65
.061	1.55	.237	6.02	.415	10.54
.083	2.11	.238	6.05	.427	10.85
.095	2.41	.241	6.12	.428	10.87
.142	3.61	.249	6.32	.467	11.86
.143	3.63	.285	7.24	.475	12.07
.154	3.91	.332	8.43	.488	12.40

CONTACT LOCATION

CONT. NO.	LOCATION X AXIS	LOCATION Y AXIS	CONT. NO.	LOCATION X AXIS	LOCATION Y AXIS	CONT. NO.	LOCATION X AXIS	LOCATION Y AXIS
1	-.428	+.241	35	-.083	+.475	69	+.166	+.238
2	-.467	+.154	36		+.380	70		+.143
3	-.488	+.061	37		+.285	71		+.048
4	-.415	.000	38		+.190	72		-.047
5	-.488	-.061	39		+.095	73		-.142
6	-.428	-.142	40		.000	74		-.237
7	-.428	-.237	41		-.095	75		-.332
8	-.332	+.333	42		-.190	76		-.427
9		+.238	43		-.285	77	+.249	+.380
10		+.143	44		-.380	78		+.285
11		+.048	45		-.475	79		+.190
12		-.047	46	.000	+.428	80		+.095
13		-.142	47		+.333	81		.000
14		-.237	48		+.238	82		-.095
15		-.332	49		+.143	83		-.190
16	-.249	+.380	50		+.048	84		-.285
17		+.285	51		-.047	85		-.380
18		+.190	52		-.142	86	+.332	+.333
19		+.095	53		-.237	87		+.238
20		.000	54		-.332	88		+.143
21		-.095	55		-.427	89		+.048
22		-.190	56	+.083	+.475	90		-.047
23		-.285	57		+.380	91		-.142
24		-.380	58		+.285	92		-.237
25	-.166	+.428	59		+.190	93		-.332
26		+.333	60		+.095	94	+.428	+.241
27		+.238	61		.000	95	+.467	+.154
28		+.143	62		-.095	96	+.488	+.061
29		+.048	63		-.190	97	+.415	.000
30		-.047	64		-.285	98	+.488	-.061
31		-.142	65		-.380	99	+.428	-.142
32		-.237	66		-.475	100	+.428	-.237
33		-.332	67	+.166	+.428			
34	-.166	-.427	68	+.166	+.333			

(Applicable to MIL-C-38999 only.)

Shell size	Arrange-ment No.	Number of contacts	Size contacts	Service rating	Contact location	Supersedes document
23	-35	100	22D	M	All	MS27532-35

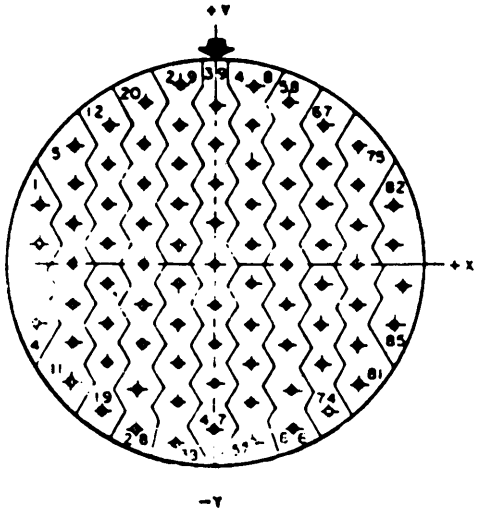

INCHES	MM	INCHES	MM	INCHES	MM
.053	1.35	.212	5.38	.371	9.42
.091	2.31	.265	6.73	.390	9.91
.106	2.69	.273	6.93	.424	10.77
.159	4.04	.287	7.29	.446	11.33
.182	4.62	.318	8.08	.455	11.56
.192	4.88	.364	9.25	.477	12.12
				.482	12.24

CONTACT LOCATION

CONTACT NUMBER	LOCATION X AXIS	LOCATION Y AXIS	CONTACT NUMBER	LOCATION X AXIS	LOCATION Y AXIS	CONTACT NUMBER	LOCATION X AXIS	LOCATION Y AXIS
1	-.455	+.159	30	-.091	+.371	59	+.182	+.318
2	-.455	+.053	31	-.091	+.265	60	+.182	+.212
3	-.482	-.053	32	-.091	+.159	61	+.182	+.106
4	-.455	-.159	33	-.091	+.053	62	+.182	.000
5	-.364	+.318	34	-.091	-.053	63	+.182	-.106
6	-.364	+.212	35	-.091	-.159	64	+.182	-.212
7	-.364	+.106	36	-.091	-.265	65	+.192	-.318
8	-.364	.000	37	-.091	-.371	66	+.192	[illegible]
9	-.364	-.106	38	-.091	-.477	67	+.273	+.371
10	-.364	-.212	39	.000	+.424	68	+.273	+.265
11	-.364	-.318	40	.000	+.318	69	+.273	+.159
12	-.273	+.371	41	.000	+.212	70	+.273	+.053
13	-.273	+.265	42	.000	+.106	71	+.273	-.053
14	-.273	+.159	43	.000	.000	72	+.273	[illegible]
15	-.273	+.053	44	.000	-.106	73	+.273	[illegible]
16	-.273	-.053	45	.000	-.212	74	[illegible]	.390
17	-.273	-.159	46	.000	-.318	75	[illegible]	[illegible]
18	-.273	-.265	47	.000	-.424	76	[illegible]	[illegible]
19	-.287	-.390	48	+.091	+.477	77	[illegible]	[illegible]
20	-.182	+.424	49	+.091	+.371	78	[illegible]	[illegible]
21	-.182	+.318	50	+.091	+.265	79	[illegible]	[illegible]
22	-.182	+.212	51	+.091	+.159	[illegible]	[illegible]	[illegible]
23	-.182	+.106	52	+.091	+.053	[illegible]	[illegible]	[illegible]
24	-.182	.000	53	+.091	-.053	[illegible]	[illegible]	[illegible]
25	-.182	-.106	54	+.091	-.159	[illegible]	[illegible]	[illegible]
26	-.182	-.212	55	+.091	-.265	[illegible]	[illegible]	[illegible]
27	-.182	-.318	56	+.091	-.371	85	[illegible]	[illegible]
28	-.192	-.446	57	+.091	-.477			
29	-.091	+.477	58	+.182	+.424			

(Inactive for new design for MIL-C-38999.)

Shell size	Arrangement No.	Number of contacts	Size contacts	Service rating	Contact location	Supersedes document
23	-2	85	22	M	All	MS20056-2

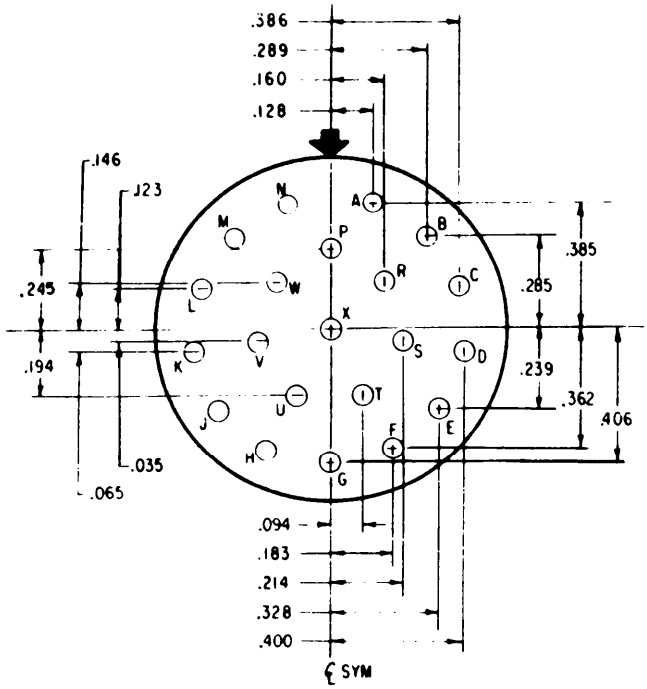

INCHES	MM	INCHES	MM	INCHES	MM
.035	.89	.183	4.65	.328	8.33
.065	1.65	.194	4.93	.362	9.19
.094	2.39	.214	5.44	.385	9.78
.123	3.12	.239	6.07	.386	9.80
.128	3.25	.245	6.22	.400	10.16
.146	3.71	.285	7.24	.406	10.31
.160	4.06	.289	7.34		

Shell size	Arrange-ment No.	Number of contacts	Size contacts	Service rating	Contact location	Supersedes document
23	-21	21	16	II	All	MS20056-21

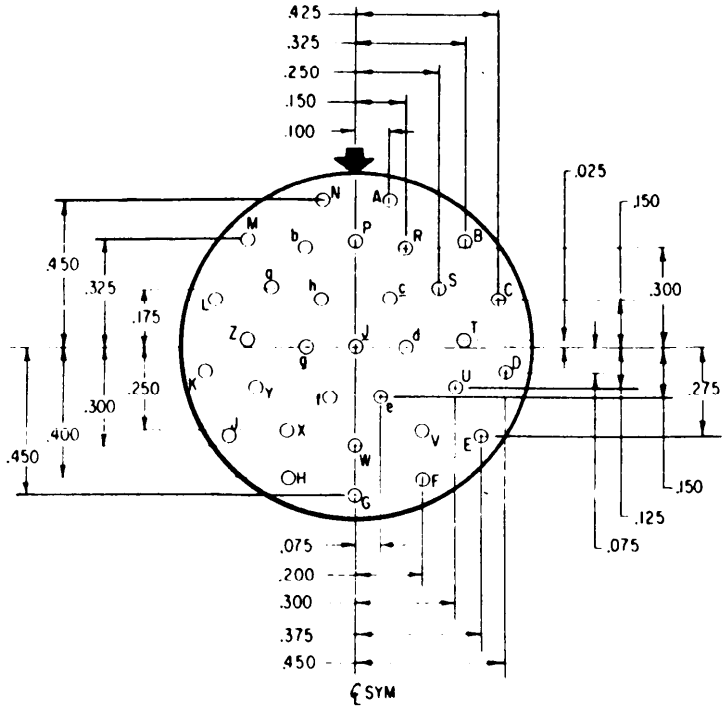

INCHES	MM	INCHES	MM	INCHES	MM
.025	.64	.175	4.45	.325	8.26
.075	1.91	.200	5.08	.375	9.53
.100	2.54	.250	6.35	.400	10.16
.125	3.18	.275	6.99	.425	10.80
.150	3.81	.300	7.62	.450	11.43

Shell size	Arrange-ment No.	Number of contacts	Size contacts	Service rating	Contact location	Supersedes document
23	-32	32	20	I	All	MS20056-32

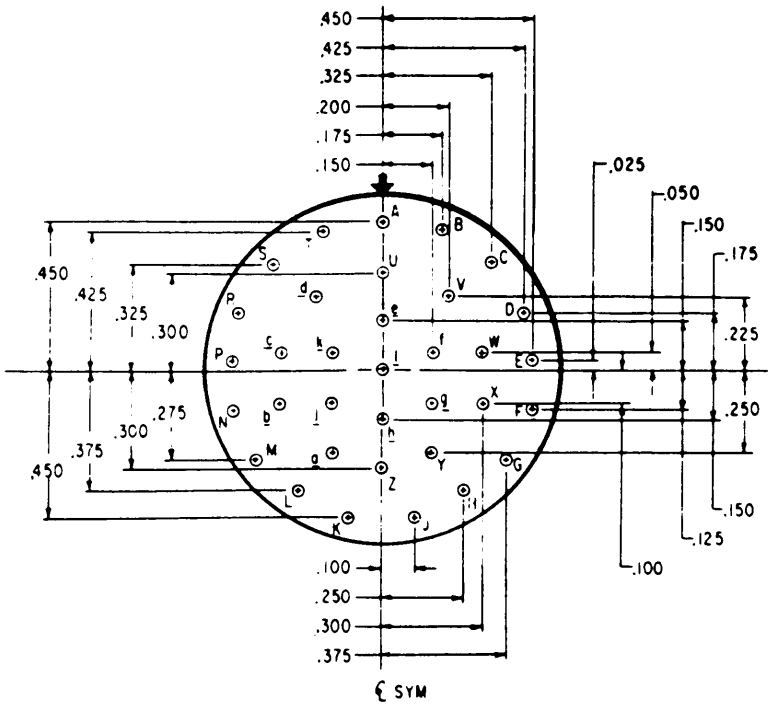

INCHES	MM	INCHES	MM	INCHES	MM
.025	.64	.175	4.45	.300	7.62
.050	1.27	.200	5.08	.325	8.26
.100	2.54	.225	5.72	.375	9.53
.125	3.18	.250	6.35	.425	10.80
.150	3.81	.275	6.99	.450	11.43

Shell size	Arrange-ment No.	Number of contacts	Size contacts	Service rating	Contact location	Supersedes document
23	-24	34	20	I	All	MS20056-34

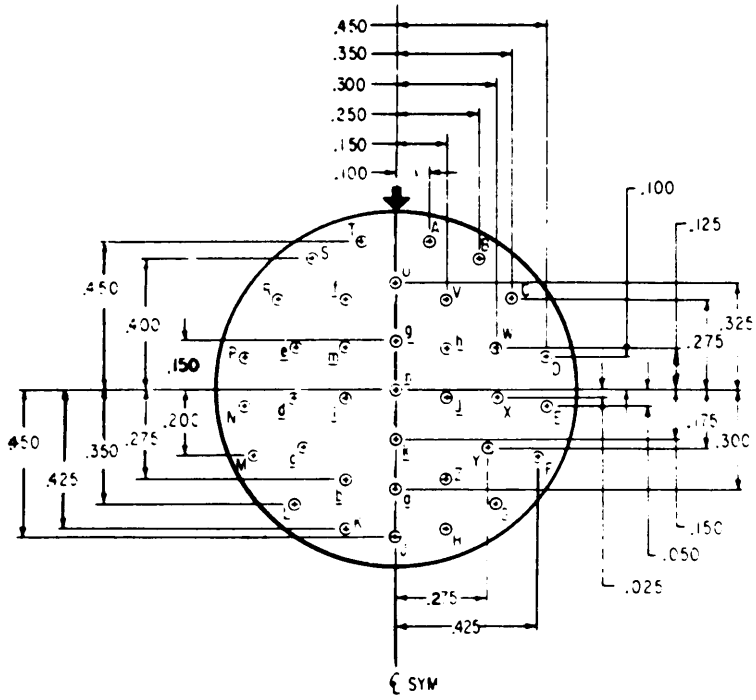

INCHES	MM	INCHES	MM	INCHES	MM
.025	.64	.175	4.45	.325	8.26
.050	1.27	.200	5.08	.350	8.89
.100	2.54	.250	6.35	.400	10.16
.125	3.18	.275	6.99	.425	10.80
.150	3.81	.300	7.62	.450	11.43

Shell size	Arrange-ment No.	Number of contacts	Size contacts	Service rating	Contact location	Supersedes document
23	-36	36	20	I	A11	MS20056-36

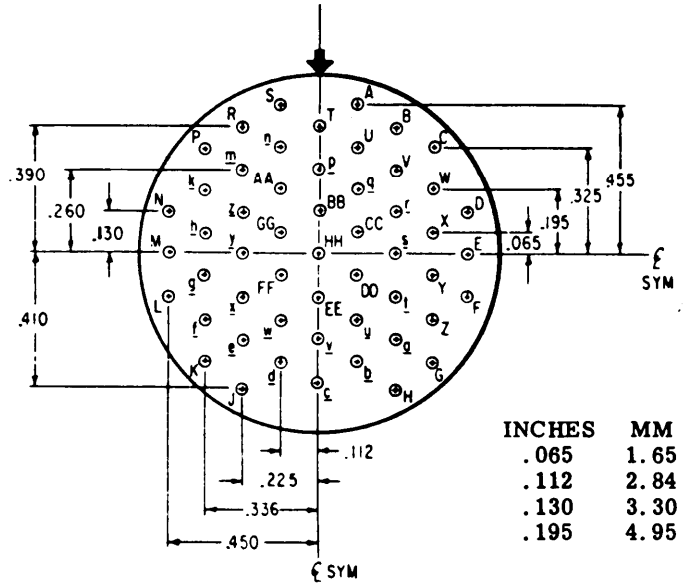

INCHES	MM	INCHES	MM	INCHES	MM
.065	1.65	.225	5.72	.390	9.91
.112	2.84	.260	6.60	.410	10.41
.130	3.30	.325	8.26	.450	11.43
.195	4.95	.336	8.53	.455	11.56

Shell size	Arrange-ment No.	Number of contacts	Size contacts	Service rating	Contact location	Supersedes document
23	-53	53	20	I	All	MS20056-53

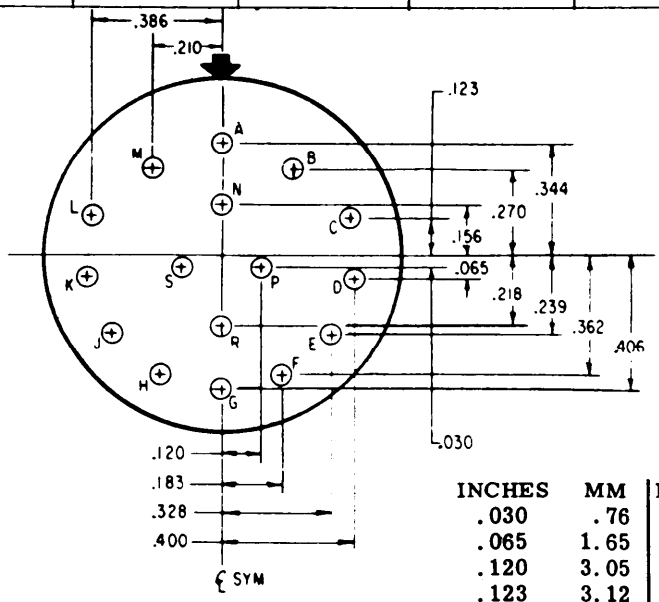

INCHES	MM	INCHES	MM	INCHES	MM
.030	.76	.183	4.65	.328	8.33
.065	1.65	.210	5.33	.344	8.74
.120	3.05	.218	5.54	.362	9.19
.123	3.12	.239	6.07	.386	9.80
.156	3.96	.270	6.86	.400	10.16
				.406	10.31

Shell size	Arrange-ment No.	Number of contacts	Size contacts	Service rating	Contact location	Supersedes document
23	-97	16	16	I	All	MS20056-97

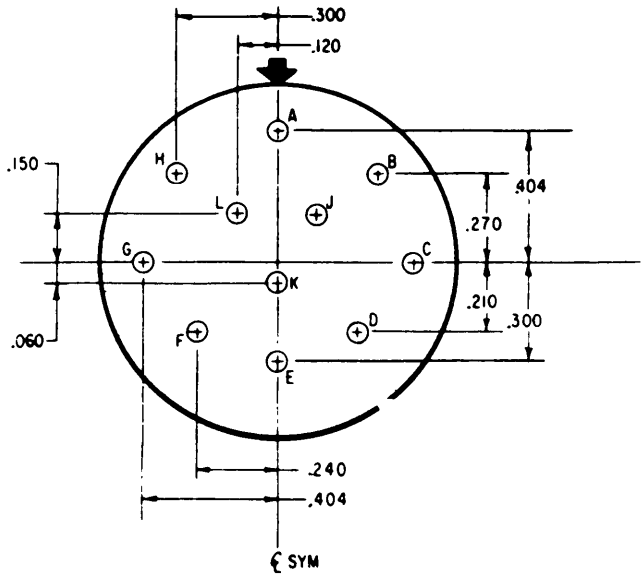

INCHES	MM	INCHES	MM
.060	1.52	.240	6.10
.120	3.05	.270	6.86
.150	3.81	.300	7.62
.210	5.33	.404	10.26

Shell size	Arrange-ment No.	Number of contacts	Size contacts	Service rating	Contact location	Supersedes document
23	-99	11	16	II	All	MS20056-99

SECTION 109

INSERT ARRANGEMENT, ELECTRICAL CONNECTOR

SHELL SIZE 25

CONTACT HOLE LOCATION			CONTACT HOLE LOCATION			CONTACT HOLE LOCATION		
CONTACT NUMBER	LOCATION X AXIS	LOCATION Y AXIS	CONTACT NUMBER	LOCATION X AXIS	LOCATION Y AXIS	CONTACT NUMBER	LOCATION X AXIS	LOCATION Y AXIS
1	-.479	+.279	46	-.166	-.427	91	+.166	-.332
2	-.520	+.190	47	-.166	-.522	92		-.427
3	-.546	+.095	48	-.083	+.475	93		-.522
4	-.555	.000	49		+.380	94	+.249	+.496
5	-.546	-.095	50		+.285	95		+.380
6	-.520	-.190	51		+.190	96		+.285
7	-.479	-.279	52		+.095	97		+.190
8	-.424	+.357	53		.000	98		+.095
9	-.415	+.190	54		-.095	99		.000
10		+.095	55		-.190	100		-.095
11		.000	56		-.285	101		-.190
12		-.095	57		-.380	102		-.285
13		-.190	58		-.475	103		-.380
14	-.424	-.357	59	.000	+.522	104		-.475
15	-.332	+.444	60		+.427	105	+.332	+.444
16		+.332	61		+.332	106		+.332
17		+.237	62		+.237	107		+.237
18		+.142	63		+.142	108		+.142
19		+.047	64		+.047	109		+.047
20		-.047	65		-.047	110		-.047
21		-.142	66		-.142	111		-.142
22		-.237	67		-.237	112		-.237
23		-.332	68		-.332	113		-.332
24		-.427	69		-.427	114		-.427
25	-.249	+.496	70		-.555	115	+.424	+.357
26		+.380	71	+.083	+.475	116	+.415	+.190
27		+.285	72		+.380	117		+.095
28		+.190	73		+.285	118		.000
29		+.095	74		+.190	119		-.095
30		.000	75		+.095	120		-.190
31		-.095	76		.000	121	+.424	-.357
32		-.190	77		-.095	122	+.479	+.279
33		-.285	78		-.190	123	+.520	+.190
34		-.380	79		-.285	124	+.546	+.095
35		-.475	80		-.380	125	+.555	.000
36	-.160	+.531	81		-.475	126	+.546	-.095
37	-.166	+.427	82	+.160	+.531	127	+.520	-.190
38		+.332	83	+.166	+.427	128	+.479	-.279
39		+.237	84		+.332			
40		+.142	85		+.237			
41		+.047	86		+.142			
42		-.047	87		+.047			
43		-.142	88		-.047			
44		-.237	89		-.142			
45		-.332	90		-.237			

INCHES	MM	INCHES	MM	INCHES	MM
.047	1.19	.279	7.09	.475	12.07
.083	2.11	.285	7.24	.479	12.17
.095	2.41	.332	8.43	.496	12.60
.142	3.61	.357	9.07	.520	13.21
.160	4.06	.380	9.67	.522	13.26
.166	4.22	.415	10.54	.531	13.46
.190	4.83	.424	10.77	.546	13.87
.237	6.02	.427	10.85	.555	14.10
.249	6.32	.444	11.28		

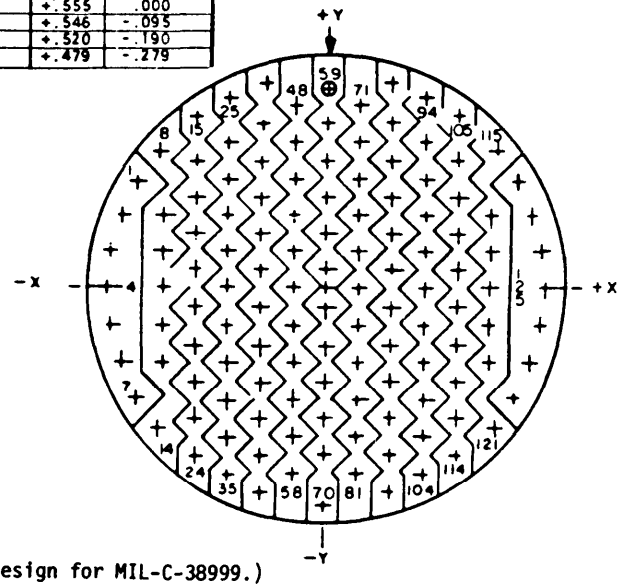

(Inactive for new design for MIL-C-38999.)

Shell size	Arrangement No.	Number of contacts	Size contacts	Service rating	Contact location	Supersedes document
25	-1	128	22M	M	All	MS20057-1

CONTACT LOCATION			CONTACT LOCATION			CONTACT LOCATION		
CONTACT NUMBER	LOCATION X AXIS	LOCATION Y AXIS	CONTACT NUMBER	LOCATION X AXIS	LOCATION Y AXIS	CONTACT NUMBER	LOCATION X AXIS	LOCATION Y AXIS
1	-.479	+.279	46	-.166	-.427	91	+.166	-.332
2	-.520	+.190	47	-.166	-.522	92		-.427
3	-.546	+.095	48	-.083	+.475	93		-.522
4	-.555	.000	49		+.380	94	+.249	+.496
5	-.546	-.095	50		+.285	95		+.380
6	-.520	-.190	51		+.190	96		+.285
7	-.479	-.279	52		+.095	97		+.190
8	-.424	+.357	53		.000	98		+.095
9	-.415	+.190	54		-.095	99		.000
10		+.095	55		-.190	100		-.095
11		.000	56		-.285	101		-.190
12		-.095	57		-.380	102		-.285
13		-.190	58		-.475	103		-.380
14	-.424	-.357	59	.000	+.522	104		-.475
15	-.332	+.444	60		+.427	105	+.332	+.444
16		+.332	61		+.332	106		+.332
17		+.237	62		+.237	107		+.237
18		+.142	63		+.142	108		+.142
19		+.047	64		+.047	109		+.047
20		-.047	65		-.047	110		-.047
21		-.142	66		-.142	111		-.142
22		-.237	67		-.237	112		-.237
23		-.332	68		-.332	113		-.332
24		-.427	69		-.427	114		-.427
25	-.249	+.496	70		-.555	115	+.424	+.357
26		+.380	71	+.083	+.475	116	+.415	+.190
27		+.285	72		+.380	117		+.095
28		+.190	73		+.285	118		.000
29		+.095	74		+.190	119		-.095
30		.000	75		+.095	120		-.190
31		-.095	76		.000	121	+.424	-.357
32		-.190	77		-.095	122	+.479	+.279
33		-.285	78		-.190	123	+.520	+.190
34		-.380	79		-.285	124	+.546	+.095
35		-.475	80		-.380	125	+.555	.000
36	-.160	+.531	81		-.475	126	+.546	-.095
37	-.166	+.427	82	+.160	+.531	127	+.520	-.190
38		+.332	83	+.166	+.427	128	+.479	-.279
39		+.237	84		+.332			
40		+.142	85		+.237			
41		+.047	86		+.142			
42		-.047	87		+.047			
43		-.142	88		-.047			
44		-.237	89		-.142			
45		-.332	90		-.237			

INCHES	MM	INCHES	MM	INCHES	MM
.047	1.19	.279	7.09	.475	12.07
.083	2.11	.285	7.24	.479	12.17
.095	2.41	.332	8.43	.496	12.60
.142	3.61	.357	9.07	.520	13.21
.160	4.06	.380	9.67	.522	13.26
.166	4.22	.415	10.54	.531	13.46
.190	4.83	.424	10.77	.546	13.87
.237	6.02	.427	10.85	.555	14.10
.249	6.32	.444	11.28		

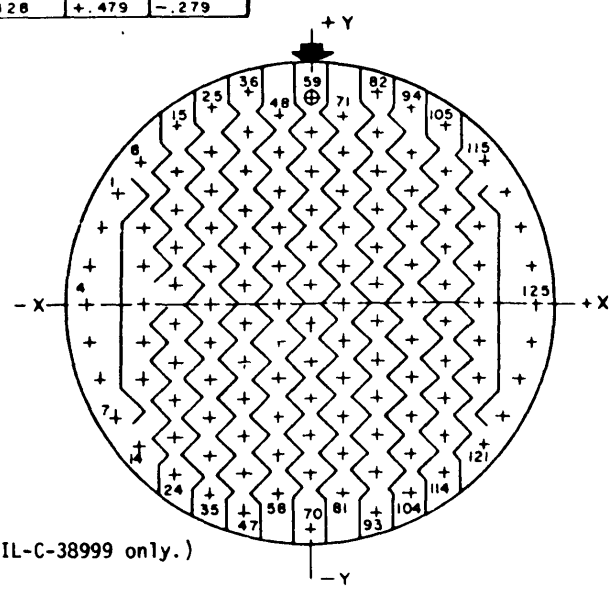

(Applicable to MIL-C-38999 only.)

Shell size	Arrangement No.	Number of contacts	Size contacts	Service rating	Contact location	Supersedes document
25	-35	128	22D	M	All	MS27533-35

CONTACT LOCATION								
CONTACT NUMBER	LOCATION		CONTACT NUMBER	LOCATION		CONTACT NUMBER	LOCATION	
	X AXIS	Y AXIS		X AXIS	Y AXIS		X AXIS	Y AXIS
1	-.550	+.039	35	-.154	-.105	69	+.154	-.210
2	-.550	-.068	36	-.154	-.210	70	+.154	-.315
3	-.459	+.253	37	-.154	-.315	71	+.154	-.420
4	-.523	+.175	38	-.154	-.420	72	+.154	-.525
5	-.459	+.092	39	-.154	-.525	73	+.255	+.457
6	-.459	-.014	40	-.053	+.502	74	+.255	+.352
7	-.459	-.122	41	-.053	+.397	75	+.255	+.247
8	-.509	-.215	42	-.053	+.292	76	+.255	+.142
9	-.459	-.307	43	-.053	+.187	77	+.255	+.037
10	-.354	+.420	44	-.053	+.082	78	+.255	-.068
11	-.354	+.315	45	-.053	-.023	79	+.255	-.173
12	-.354	+.210	46	-.053	-.128	80	+.255	-.278
13	-.354	+.105	47	-.053	-.233	81	+.255	-.383
14	-.354	.000	48	-.053	-.338	82	+.255	-.488
15	-.354	-.105	49	-.053	-.443	83	+.354	+.420
16	-.354	-.210	50	-.053	-.548	84	+.354	+.315
17	-.354	-.315	51	+.053	+.502	85	+.354	+.210
18	-.354	-.420	52	+.053	+.397	86	+.354	+.105
19	-.255	+.457	53	+.053	+.292	87	+.354	.000
20	-.255	+.352	54	+.053	+.187	88	+.354	-.105
21	-.255	+.247	55	+.053	+.082	89	+.354	-.210
22	-.255	+.142	56	+.053	-.023	90	+.354	-.315
23	-.255	+.037	57	+.053	-.128	91	+.354	-.420
24	-.255	-.068	58	+.053	-.233	92	+.459	+.253
25	-.255	-.173	59	+.053	-.338	93	+.523	+.175
26	-.255	-.278	60	+.053	-.443	94	+.459	+.092
27	-.255	-.383	61	+.053	-.548	95	+.459	-.014
28	-.255	-.488	62	+.154	+.525	96	+.459	-.122
29	-.154	+.525	63	+.154	+.420	97	+.509	-.215
30	-.154	+.420	64	+.154	+.315	98	+.459	-.307
31	-.154	+.315	65	+.154	+.210	99	+.550	+.039
32	-.154	+.210	66	+.154	+.105	100	+.550	-.068
33	-.154	+.105	67	+.154	.000			
34	-.154	.000	68	+.154	-.105			

INCHES	MM	INCHES	MM	INCHES	MM
.014	.36	.187	4.75	.354	8.99
.023	.58	.210	5.33	.383	9.73
.037	.94	.215	5.46	.397	10.08
.039	.99	.233	5.92	.420	10.67
.053	1.35	.247	6.27	.443	11.25
.068	1.73	.253	6.43	.457	11.61
.082	2.08	.255	6.48	.459	11.66
.092	2.34	.256	6.50	.488	12.40
.105	2.67	.278	7.06	.502	12.75
.122	3.10	.292	7.42	.509	12.93
.128	3.25	.307	7.80	.523	13.28
.142	3.61	.315	8.00	.525	13.34
.154	3.91	.338	8.59	.548	13.92
.173	4.39	.352	8.94	.550	13.97
.175	4.45				

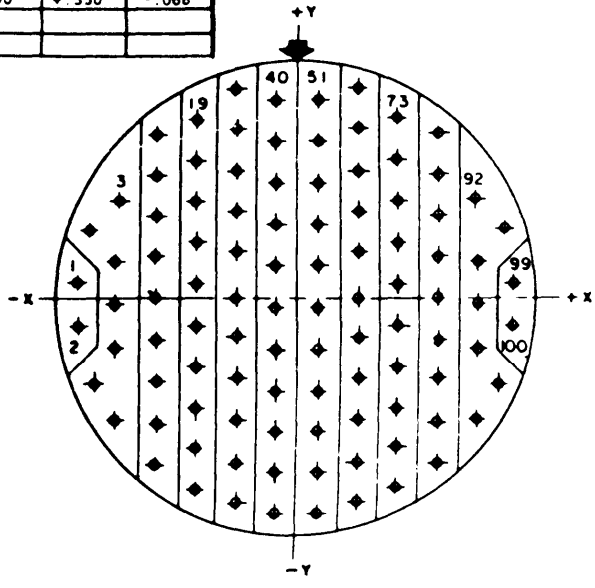

(Inactive for new design for MIL-C-38999.)

Shell size	Arrangement No.	Number of contacts	Size contacts	Service rating	Contact location	Supersedes document
25	-2	100	22	M	All	MS20057-2

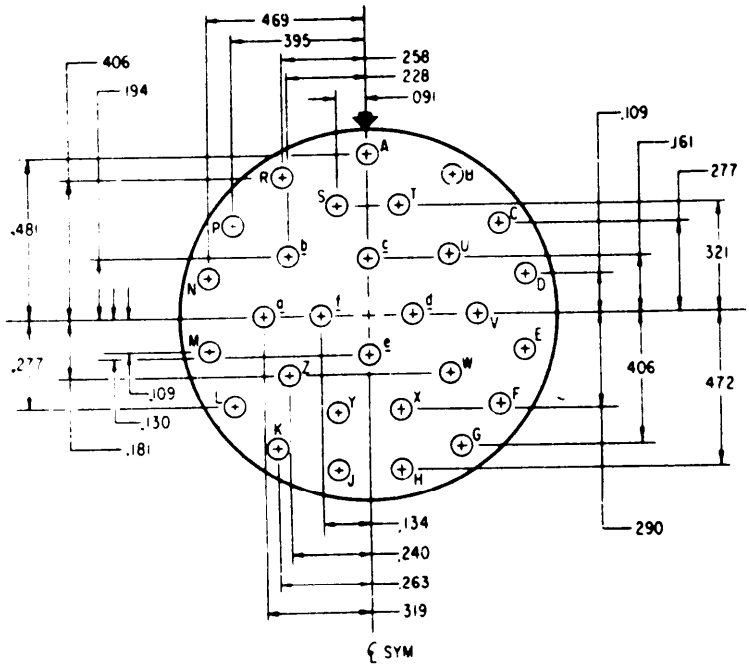

INCHES	MM	INCHES	MM	INCHES	MM
.091	2.31	.228	5.79	.321	8.15
.109	2.77	.240	6.10	.395	10.03
.130	3.30	.258	6.55	.406	10.31
.134	3.40	.263	6.68	.469	11.91
.161	4.09	.277	7.04	.472	11.99
.181	4.60	.290	7.37	.481	12.22
.194	4.93	.319	8.10		

Shell size	Arrange-ment No.	Number of contacts	Size contacts	Service rating	Contact location	Supersedes document
25	-29	29	16	I	All	MS20057-29

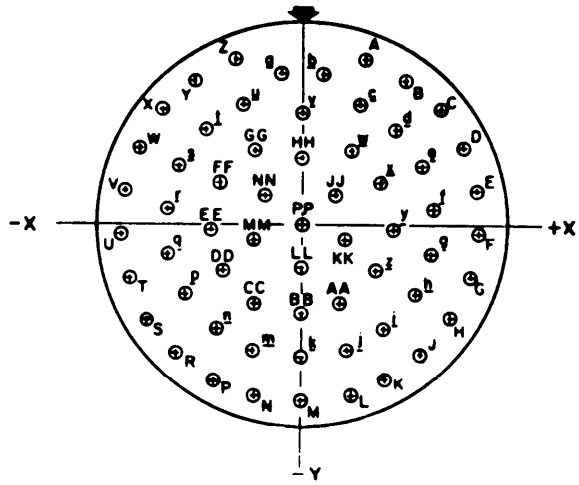

CONTACT LETTER	LOCATION X AXIS	LOCATION Y AXIS	CONTACT LETTER	LOCATION X AXIS	LOCATION Y AXIS	CONTACT LETTER	LOCATION X AXIS	LOCATION Y AXIS
A	+.196	+.500	Y	-.314	+.435	v	.000	+.338
B	+.314	+.435	z	-.196	+.500	w	+.147	+.223
C	+.413	+.343	a	-.068	+.454	x	+.237	+.122
D	+.485	+.230	b	+.068	+.454	y	+.267	-.010
E	+.527	+.101	c	+.173	+.363	z	+.228	-.139
F	+.536	-.030	d	+.285	+.283	AA	+.131	-.233
G	+.511	-.164	e	+.362	+.175	BB	.000	-.267
H	+.454	-.287	f	+.399	+.046	CC	-.131	-.233
J	+.368	-.391	g	+.392	-.088	DD	-.228	-.139
K	+.259	-.470	h	+.341	-.213	EE	-.267	-.010
L	+.134	-.519	i	+.251	-.314	FF	-.237	-.122
M	.000	-.537	j	+.133	-.379	GG	-.147	+.223
N	-.134	-.519	k	.000	-.402	HH	.000	+.200
P	-.259	-.470	m	-.133	-.379	JJ	+.105	+.094
R	-.368	-.391	n	-.251	-.314	KK	+.135	-.041
S	-.454	-.287	p	-.341	-.213	LL	.000	-.132
T	-.511	-.164	q	-.392	-.088	MM	-.135	-.041
U	-.536	-.030	r	-.399	+.046	NN	-.105	+.094
V	-.527	+.101	s	-.362	+.175	PP	.000	.000
W	-.485	+.230	t	-.285	+.283			
X	-.413	+.343	u	-.173	+.363			

INCHES	MM	INCHES	MM	INCHES	MM	INCHES	MM
.010	.25	.135	3.43	.251	6.38	.392	9.96
.030	.76	.139	3.53	.259	6.58	.399	10.13
.041	1.04	.147	3.73	.267	6.78	.402	10.21
.046	1.17	.164	4.17	.283	7.19	.413	10.49
.068	1.73	.173	4.39	.285	7.24	.435	11.05
.088	2.24	.175	4.45	.287	7.29	.454	11.53
.094	2.39	.196	4.98	.314	7.98	.470	11.94
.101	2.57	.200	5.08	.338	8.59	.485	12.32
.105	2.67	.213	5.41	.343	8.71	.500	12.70
.122	3.10	.223	5.66	.362	9.19	.511	12.98
.131	3.33	.228	5.79	.363	9.22	.519	13.18
.132	3.35	.230	5.84	.368	9.35	.527	13.39
.133	3.38	.233	5.92	.379	9.63	.536	13.61
.134	3.40	.237	6.02	.391	9.93	.537	13.64

Shell size	Arrangement No.	Number of contacts	Size contacts	Service rating	Contact location	Supersedes document
25	-61	61	20	I	All	MS20057-61

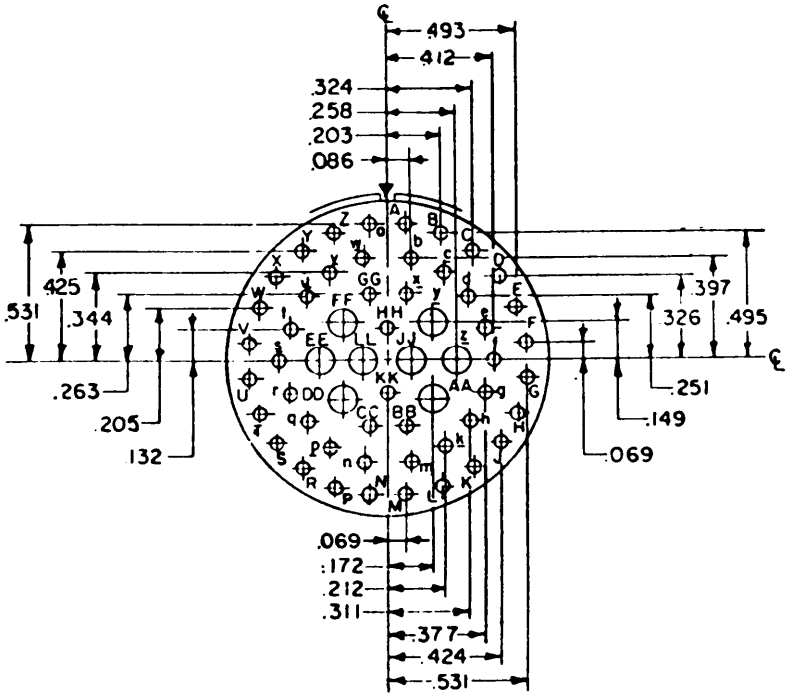

INCHES	MM	INCHES	MM	INCHES	MM
.059	1.50	.212	5.38	.397	10.08
.069	1.75	.251	6.38	.412	10.46
.086	2.18	.258	6.55	.424	10.77
.132	3.35	.311	7.90	.425	10.80
.149	3.78	.324	8.23	.493	12.52
.172	4.37	.326	8.28	.495	12.57
.203	5.16	.344	8.78	.531	13.49
.205	5.21	.377	9.58		

Arrangement No.	Number of contacts	Size contacts	Service rating	Contact location	Supersedes document
-4	8	16	I	y,z,AA,DD, EE,FF,LL, JJ	MS20057-4
	48	20		All others	

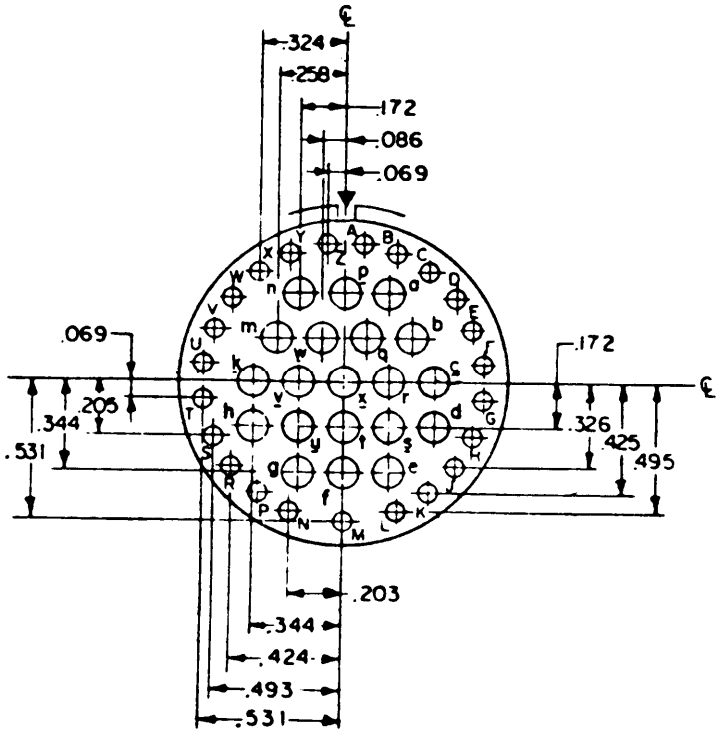

INCHES	MM	INCHES	MM
.069	1.75	.326	8.28
.086	2.18	.344	8.78
.172	4.37	.424	10.77
.203	5.16	.425	10.80
.205	5.21	.493	12.52
.258	6.55	.495	12.57
.324	8.23	.531	13.49

Shell size	Arrangement No.	Number of contacts	Size contacts	Service rating	Contact location	Supersedes document
25	-43	20	16	I	a,b,c,d,e, f,g,h,k,m, n,p,q,r,s,t, u,v,w,x	MS20057-43
		23	20		All others	

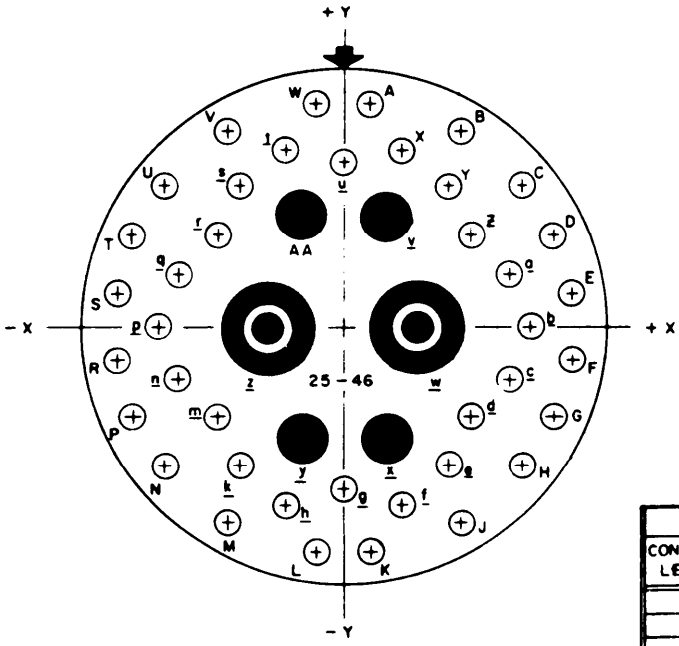

INCHES	MM	INCHES	MM	INCHES	MM
.065	1.65	.245	6.22	.420	10.67
.079	2.01	.265	6.73	.424	10.77
.097	2.46	.275	6.99	.426	10.82
.125	3.18	.297	7.54	.466	11.84
.136	3.45	.337	8.56	.493	12.52
.180	4.57	.390	9.91	.531	13.49
.217	5.51	.395	10.03	.533	13.54

CONTACT LOCATION					
CONTACT LETTER	LOCATION X AXIS	LOCATION Y AXIS	CONTACT LETTER	LOCATION X AXIS	LOCATION Y AXIS
A	+.065	+.533	a	+.390	+.125
B	+ 275	+.466	b	+.426	.000
C	+.420	+.337	c	+.390	-.125
D	+.493	+.217	d	+.297	-.217
E	+.531	+.079	e	+.245	-.337
F	+.531	-.079	f	+.136	-.424
G	+.493	-.217	g	.000	-.395
H	+.420	-.337	h	-.136	-.424
J	+.275	-.466	k	-.245	-.337
K	+.065	-.533	m	-.297	-.217
L	-.065	-.533	n	-.390	-.125
M	-.275	-.466	p	-.426	.000
N	-.420	-.337	q	-.390	+.125
P	-.493	-.217	r	-.297	+.217
R	-.531	-.079	s	-.245	+.337
S	-.531	+.079	t	-.136	+.424
T	-.493	+.217	u	.000	+.395
U	-.420	+.337	v	+.097	+.265
V	-.275	+.466	w	+.180	.000
W	-.065	+.533	x	+.097	-.265
X	+.136	+.424	y	-.097	-.265
Y	+.245	+.337	z	-.180	.000
Z	+.297	+.217	AA	-.097	+.265

Shell size	Arrangement No.	Number of contacts	Size contacts	Service rating	Contact location	Supersedes document
25	-46	2	No. 8 COAX	COAX	z,w	MS20057-46
		4	16		AA,v x,y	
		40	20		All others	

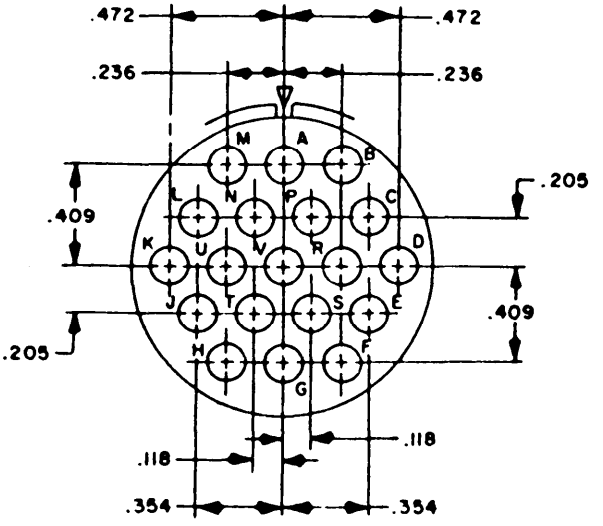

INCHES	MM
.118	3.00
.205	5.21
.236	5.99
.354	8.99
.409	10.39
.472	11.99

Shell size	Arrange-ment No.	Number of contacts	Size contacts	Service rating	Contact location	Supersedes document
25	-19	19	12	I	All	MS20057-19

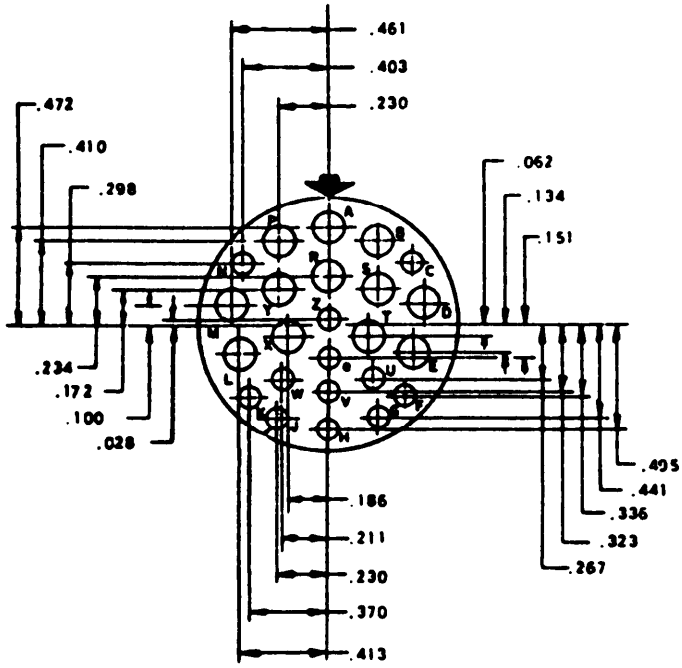

INCHES	MM	INCHES	MM
.028	.71	.298	7.57
.062	1.57	.323	8.20
.100	2.54	.336	8.53
.134	3.40	.370	9.40
.151	3.84	.403	10.24
.172	4.37	.410	10.41
.185	4.70	.413	10.49
.211	5.36	.441	11.20
.230	5.84	.461	11.71
.234	5.94	.472	11.99
.267	6.78	.495	12.57

SHELL SIZE	ARRANGE-MENT NO.	NUMBER OF CONTACTS	SIZE CONTACTS	SERVICE RATING	CONTACT LOCATION
25	-24	12	12	II	A, B, D, E, LM P, R, S, T, X, Y
		12	16		ALL OTHERS

SECTION 200

INSERT ARRANGEMENTS, ELECTRICAL CONNECTORS, SERIES II, FOR MIL-C-38999 AND MIL-C-27599

SECTION		Page
201A	Insert Arrangement, Electrical Connector, Shell Size 8 - - - - - - - - - -	201.1
202A	Insert Arrangement, Electrical Connector, Shell Size 10 - - - - - - - - -	202.1
203A	Insert Arrangement, Electrical Connector, Shell Size 12 - - - - - - - - - -	203.1
2044	Insert Arrangement, Electrical Connector, Shell Size 14 - - - - - - - - - -	204.1
205A	Insert Arrangement, Electrical Connector, Shell Size 16 - - - - - - - - - -	205.1
206A	Insert Arangement, Electrical Connector, Shell Size 18 - - - - - - - - - -	206.1
207A	Insert Arrangement, Electrical Connector, Shell Size 20 - - - - - - - - - -	207.1
208A	Insert Arrangement, Electrical Connector, Shell Size 22 - - - - - - - - - -	208.1
209A	Insert Arrangement, Electrical Connector, Shell Size 24 - - - - - - - - - -	209.1

SECTION 201

INSERT ARRANGEMENT, ELECTRICAL CONNECTOR

SHELL SIZE 8

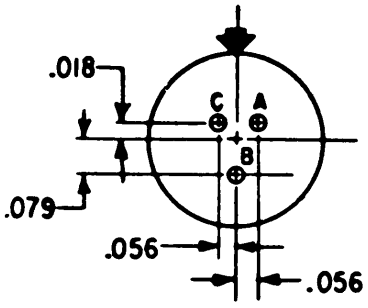

INCHES	MM
.018	.46
.056	1.42
.079	2.01

(Applicable to MIL-C-27599 only.)

Shell size	Arrange-ment No.	Number of contacts	Size contacts	Service rating	Contact location	Supersedes document
8	-3	3	20	M	All	MS27343-3

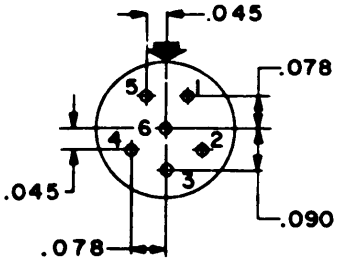

INCHES	MM
.045	1.14
.078	1.98
.090	2.29

(Inactive for new design for MIL-C-38999.)

Shell size	Arrange-ment No.	Number of contacts	Size contacts	Service rating	Contact location	Supersedes document
8	-6	6	22M	M	All	MS27343-6

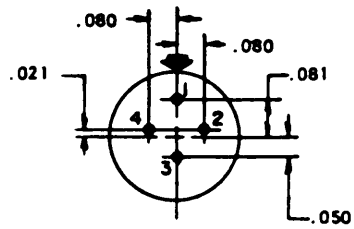

INCHES	MM
.021	.53
.050	1.27
.080	2.03
.081	2.06

(Applicable to MIL-C-27599 only.)

Shell size	Arrange-ment No.	Number of contacts	Size contacts	Service rating	Contact location	Supersedes document
8	-44	4	22	M	All	MS27343-44

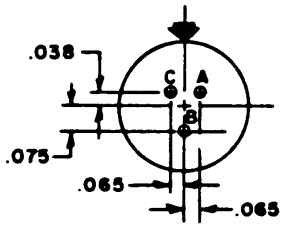

INCHES	MM
.038	.97
.065	1.65
.075	1.91

Shell size	Arrange-ment No.	Number of contacts	Size contacts	Service rating	Contact location	Supersedes document
8	-98	3	20	I	All	MS27343-98

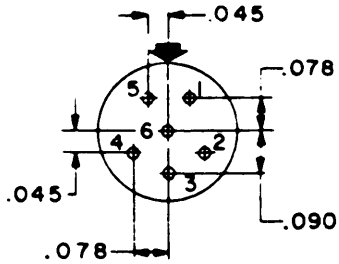

INCHES	MM
.045	1.14
.078	1.98
.090	2.29

(Applicable to MIL-C-38999 only.)

Shell size	Arrange-ment No.	Number of contacts	Size contacts	Service rating	Contact location	Supersedes document
8	-35	6	22D	M	All	MS27516-35

SECTION 202

INSERT ARRANGEMENT, ELECTRICAL CONNECTOR

SHELL SIZE 10

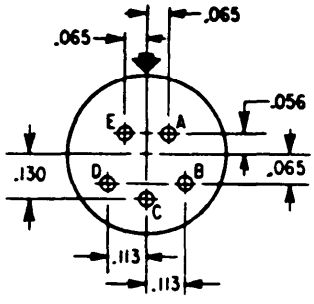

INCHES	MM
.056	1.42
.065	1.65
.113	2.87
.130	3.30

Shell size	Arrange-ment No.	Number of contacts	Size contacts	Service rating	Contact location	Supersedes document
10	-5	5	20	I	All	MS27344-5

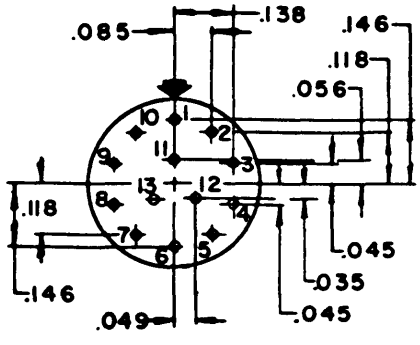

INCHES	MM	INCHES	MM
.035	.89	.085	2.16
.045	1.14	.118	3.00
.049	1.24	.138	3.51
.056	1.42	.146	3.71

(Inactive for new design for MIL-C-38999.)

Shell size	Arrange-ment No.	Number of contacts	Size contacts	Service rating	Contact location	Supersedes document
10	-13	13	22M	M	All	MS27344-13

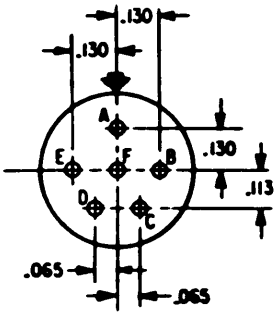

INCHES	MM
.065	1.65
.113	2.87
.130	3.30

Shell size	Arrange-ment No.	Number of contacts	Size contacts	Service rating	Contact location	Supersedes document
10	-98	6	20	I	All	MS27344-98

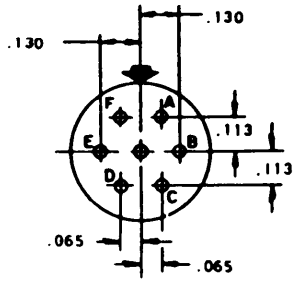

INCHES	MM
.065	1.65
.113	2.87
.130	3.30

Shell size	Arrange-ment No.	Number of contacts	Size contacts	Service rating	Contact location	Supersedes document
10	-99	7	20	I	All	MS27344-99

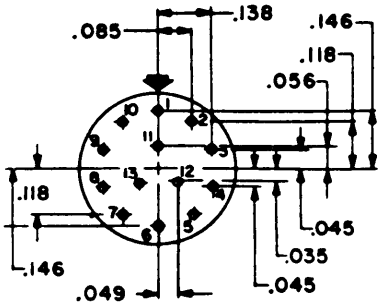

INCHES	MM	INCHES	MM
.035	.89	.085	2.16
.045	1.14	.118	3.00
.049	1.24	.138	3.51
.056	1.42	.146	3.71

(Applicable to MIL-C-38999 only.)

Shell size	Arrange-ment No.	Number of contacts	Size contacts	Service rating	Contact location	Supersedes document
10	-35	13	22D	M	All	MS27517-35

SECTION 203

INSERT ARRANGEMENT, ELECTRICAL CONNECTOR

SHELL SIZE 12

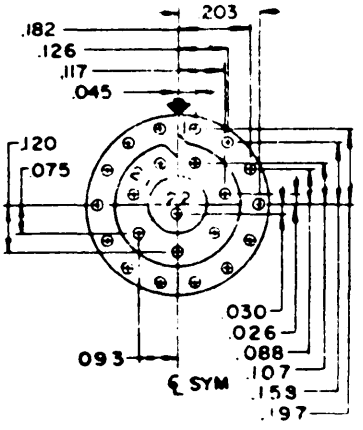

INCHES	MM	INCHES	MM	INCHES	MM
.026	.66	.093	2.36	.158	4.01
.030	76	.107	2.72	.182	4.62
.045	1.14	.117	2.97	.197	5.00
.075	1.91	.120	3.05	.203	5.16
.088	2.24	.126	3.20		

(Inactive for new design for MIL-C-38999.)

Shell size	Arrange-ment No.	Number of contacts	Size contacts	Service rating	Contact location	Supersedes document
12	-22	22	22M	M	All	MS27345-22

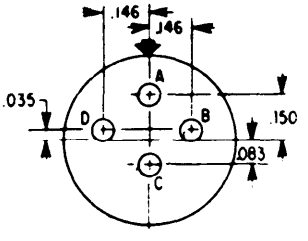

INCHES	MM
.035	.89
.083	2.11
.146	3.71
.150	3.81

Shell size	Arrange-ment No.	Number of contacts	Size contacts	Service rating	Contact location	Supersedes document
12	-4	4	16	I	All	MS27345-4

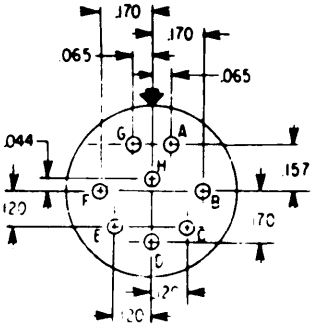

INCHES	MM
.044	1.12
.065	1.65
.120	3.05
.157	3.99
.170	4.32

Shell size	Arrange-ment No.	Number of contacts	Size contacts	Service rating	Contact location	Supersedes document
12	-8	8	20	I	All	MS27345-8

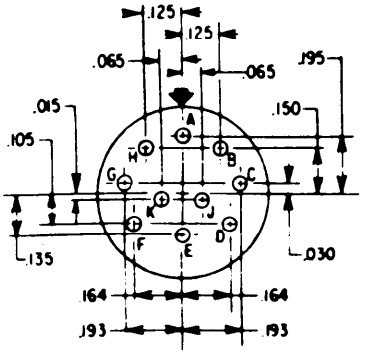

INCHES	MM	INCHES	MM
.030	.76	.135	3.43
.065	1.65	.150	3.81
.105	2.67	.164	4.17
.115	2.92	.193	4.90
.125	3.18	.195	4.95

Shell size	Arrange-ment No.	Number of contacts	Size contacts	Service rating	Contact location	Supersedes document
12	-98	10	.20	I	All	MS27345-98

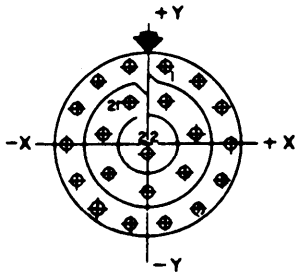

CONTACT LOCATION					
CONT. NO.	LOCATION X AXIS	LOCATION Y AXIS	CONT. NO.	LOCATION X AXIS	LOCATION Y AXIS
1	+.045	+.197	12	-.182	+.088
2	+.126	+.158	13	-.126	+.158
3	+.182	+.088	14	-.045	+.197
4	+.203	0	15	+.045	+.107
5	+.182	-.088	16	+.117	+.026
6	+.126	-.158	17	+.093	-.075
7	+.045	-.197	18	0	-.120
8	-.045	-.197	19	-.093	-.075
9	-.126	-.158	20	-.117	+.026
10	-.182	-.088	21	-.045	+.107
11	-.203	0	22	0	-.030

INCHES	MM	INCHES	MM	INCHES	MM
.026	.66	.088	2.24	.120	3.05
.030	.76	.093	2.36	.126	3.20
.045	1.14	.107	2.72	.182	4.62
.075	1.91	.117	2.97	.197	5.00
				.203	5.16

(Applicable to MIL-C-38999 only.)

Shell size	Arrange-ment No.	Number of contacts	Size contacts	Service rating	Contact location	Supersedes document
12	-35	22	22D	M	All	MS27518-35

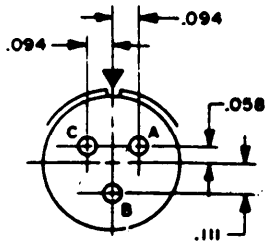

INCHES	MM
.058	1.47
.094	2.39
.111	2.79

Shell size	Arrange-ment No.	Number of contacts	Size contacts	Service rating	Contact location	Supersedes document
12	-3	3	16	II	All	MS27345-3

SECTION 204

INSERT ARRANGEMENT, ELECTRICAL CONNECTOR

SHELL SIZE 14

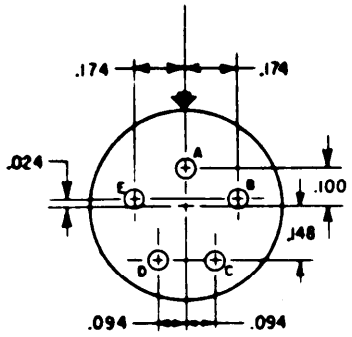

INCHES	MM
.024	.61
.094	2.39
.100	2.54
.148	3.76
.174	4.42

Shell size	Arrange-ment No.	Number of contacts	Size contacts	Service rating	Contact location	Supersedes document
14	-5	5	16	II	All	MS27346-5

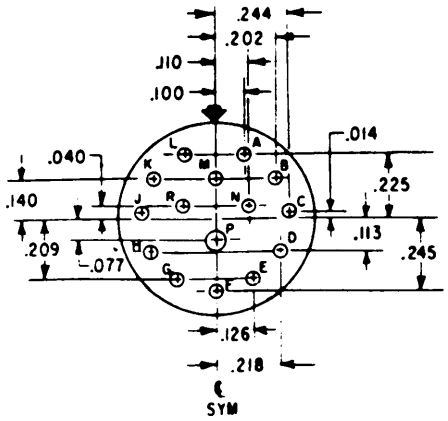

INCHES	MM	INCHES	MM	INCHES	MM
.014	.36	.113	2.87	.218	5.54
.040	1.02	.126	3.20	.225	5.72
.077	1.96	.140	3.56	.244	6.20
.100	2.54	.202	5.13	.245	6.22
.110	2.79	.209	5.31		

Shell size	Arrange-ment No.	Number of contacts	Size contacts	Service rating	Contact location	Supersedes document
14	-15	1	16	I	P	MS27346-15
		14	20		All others	

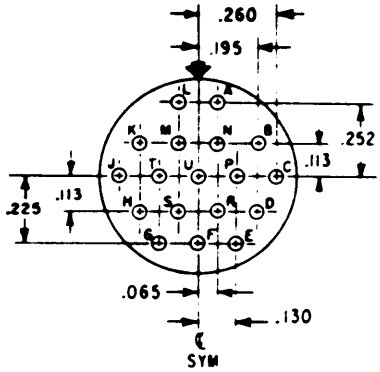

INCHES	MM	INCHES	MM
.065	1.65	.225	5.72
.113	2.87	.252	6.40
.130	3.30	.260	6.60
.195	4.95		

Shell size	Arrange-ment No.	Number of contacts	Size contacts	Service rating	Contact location	Supersedes document
14	-18	18	20	I	All	MS27346-18

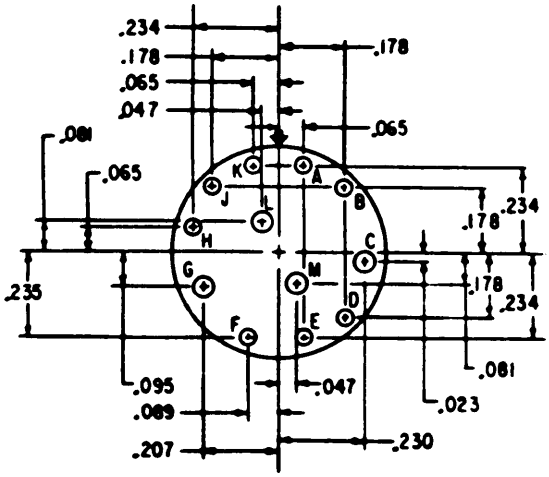

INCHES	MM	INCHES	MM
.023	.58	.178	4.52
.047	1.19	.207	5.26
.065	1.65	.230	5.84
.081	2.06	.234	5.94
.089	2.26	.235	5.97
.095	2.41		

Shell size	Arrange-ment No.	Number of contacts	Size contacts	Service rating	Contact location	Supersedes document
14	-97	4	16	I	C,M,G,L	MS27346-97
		8	20		All others	

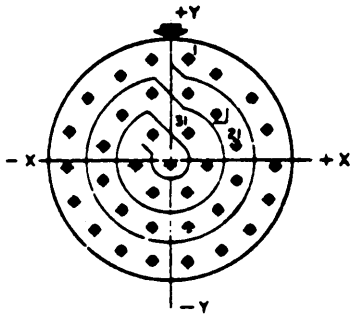

CONTACT LOCATION					
CONTACT NUMBER	LOCATION X AXIS	LOCATION Y AXIS	CONTACT NUMBER	LOCATION X AXIS	LOCATION Y AXIS
1	+.045	+.262	20	+.123	+.119
2	+.123	+.217	21	+.170	+.040
3	+.211	+.160	22	+.170	-.050
4	+.254	+.080	23	+.123	-.127
5	+.266	-.010	24	+.045	-.172
6	+.247	-.098	25	-.045	-.172
7	+.200	-.175	26	-.123	-.127
8	+.130	-.232	27	-.170	-.050
9	+.045	-.262	28	-.170	+.040
10	-.045	-.262	29	-.123	+.119
11	-.130	-.232	30	-.045	+.172
12	-.200	-.175	31	+.045	+.074
13	-.247	-.098	32	+.090	-.004
14	-.266	-.010	33	+.045	-.082
15	-.254	+.080	34	-.045	-.082
16	-.211	+.160	35	-.090	-.004
17	-.123	+.217	36	-.045	+.074
18	-.045	+.262	37	.000	-.004
19	+ [illegible]	+.172			

INCHES	MM	INCHES	MM	INCHES	MM
.004	.10	.098	2.49	.200	5.08
.010	.25	.119	3.02	.211	5.36
.040	1.02	.123	3.12	.217	5.51
.045	1.14	.127	3.23	.232	5.89
.050	1.27	.130	3.30	.247	6.27
.074	1.88	.160	4.06	.254	6.45
.080	2.03	.170	4.32	.262	6.65
.082	2.08	.172	4.37	.266	6.76
.090	2.29	.175	4.45		

(Applicable to MIL-C-38999 only.)

Shell size	Arrange-ment No.	Number of contacts	Size contacts	Service rating	Contact location	Supersedes document
14	-35	37	22D	M	A11	MS27519-35

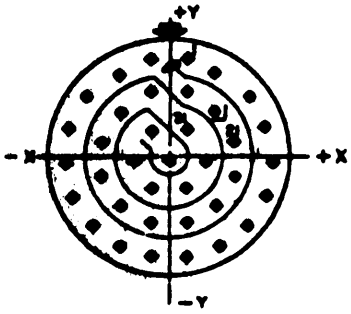

CONTACT LOCATION					
CONTACT NUMBER	LOCATION X AXIS	LOCATION Y AXIS	CONTACT NUMBER	LOCATION X AXIS	LOCATION Y AXIS
1	+.045	+.262	20	+.123	+.119
2	+.123	+.217	21	+.170	+.040
3	+.211	+.160	22	+.170	-.050
4	+.254	+.080	23	+.123	-.127
5	+.266	-.010	24	+.045	-.172
6	+.247	-.098	25	-.045	-.172
7	+.200	-.175	26	-.123	-.127
8	+.130	-.232	27	-.170	-.050
9	+.045	-.262	28	-.170	+.040
10	-.045	-.262	29	-.123	+.119
11	-.130	-.232	30	-.045	+.172
12	-.200	-.175	31	+.045	+.074
13	-.247	-.098	32	+.090	-.004
14	-.266	-.010	33	+.045	-.082
15	-.254	+.080	34	-.045	-.082
16	-.211	+.160	35	-.090	-.004
17	-.123	+.217	36	-.045	+.074
18	-.045	+.262	37	.000	-.074
19	+.045	+.172			

INCHES	MM	INCHES	MM	INCHES	MM
.004	.10	.098	2.49	.200	5.08
.010	.25	.119	3.02	.211	5.36
.040	1.02	.123	3.12	.217	5.51
.045	1.14	.127	3.23	.232	5.89
.050	1.27	.130	3.30	.247	6.27
.074	1.88	.160	4.06	.254	6.45
.080	2.03	.170	4.32	.262	6.65
.082	2.08	.172	4.37	.266	6.76
.090	2.29	.175	4.45		

(Inactive for new design for MIL-C-38999.)

Shell size	Arrangement No.	Number of contacts	Size contacts	Service rating	Contact location	Supersedes document
14	-37	37	22M	M	All	MS27346-37

SECTION 205

INSERT ARRANGEMENT, ELECTRICAL CONNECTOR

SHELL SIZE 16

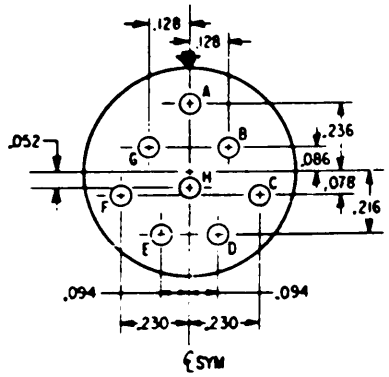

INCHES	MM	INCHES	MM
.052	1.32	.128	3.25
.078	1.98	.216	5.49
.086	2.18	.230	5.84
.094	2.39	.236	5.99

Shell size	Arrange-ment No.	Number of contacts	Size contacts	Service rating	Contact location	Supersedes document
16	-8	8	16	II	All	MS27347-8

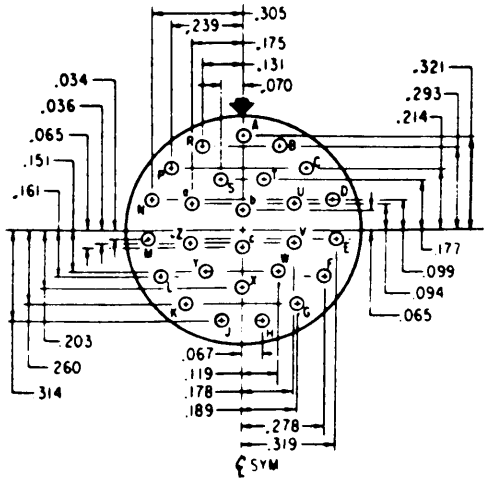

INCHES	MM	INCHES	MM
.034	.86	.099	2.51
.036	.91	.119	3.02
.065	1.65	.131	3.33
.067	1.70	.151	3.84
.070	1.78	.161	4.09
.094	2.39	.175	4.45

INCHES	MM	INCHES	MM
.177	4.50	.260	6.60
.178	4.52	.278	7.06
.189	4.80	.293	7.44
.203	5.16	.305	7.75
.214	5.44	.314	7.98
.239	6.07	.319	8.10
		.321	8.15

Shell size	Arrange-ment No.	Number of contacts	Size contacts	Service rating	Contact location	Supersedes document
16	-26	26	20	I	All	MS27347-26

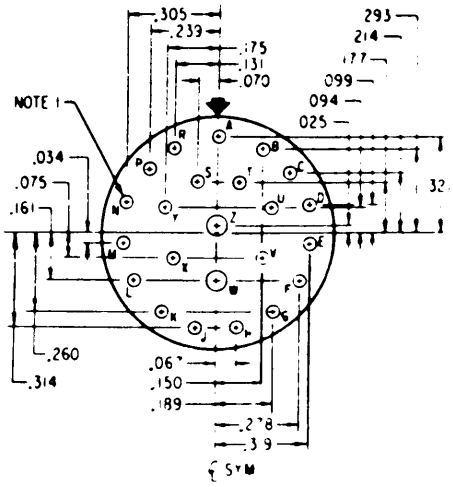

INCHES	MM	INCHES	MM
.025	.64	.099	2.51
.034	.86	.131	3.33
.067	1.70	.150	3.81
.070	1.78	.161	4.09
.075	1.91	.175	4.45
.094	2.39	.177	4.50

INCHES	MM	INCHES	MM
.189	4.80	.305	7.75
.214	5.44	.314	7.98
.239	6.07	.319	8.10
.260	6.60	.321	8.15
.278	7.06		
.293	7.44		

Shell size	Arrangement No.	Number of contacts	Size contacts	Service rating	Contact location	Supersedes document
16	-99	2	16	I	w,z	MS27347-99
		21	20		All others	

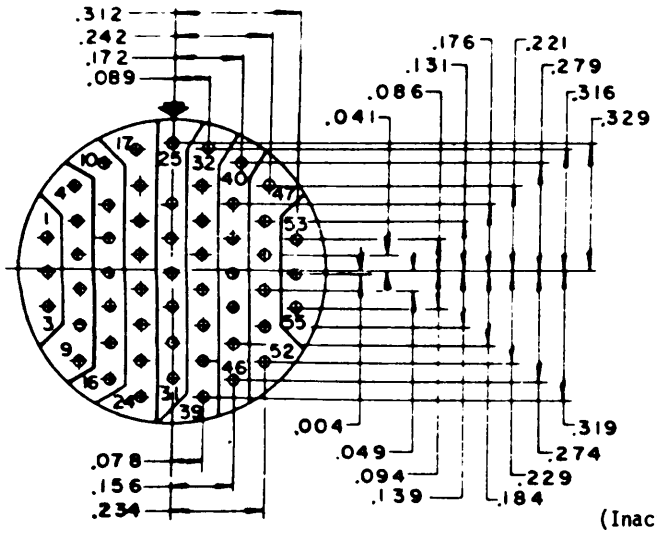

INCHES	MM	INCHES	MM
.004	.10	.094	2.39
.041	1.04	.131	3.33
.049	1.24	.139	3.53
.078	1.98	.156	3.96
.086	2.18	.172	4.37
.089	2.26	.176	4.47

INCHES	MM	INCHES	MM
.184	4.67	.279	7.09
.221	5.61	.312	7.92
.229	5.82	.316	8.03
.234	5.94	.319	8.10
.242	6.15	.329	8.36
.274	6.96		

(Inactive for new design for MIL-C-38999.)

Shell size	Arrangement No.	Number of contacts	Size contacts	Service rating	Contact location	Supersedes document
16	-55	55	22M	M	All	MS27347-55

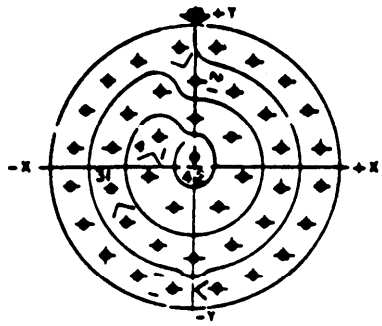

CONTACT NUMBER	LOCATION X AXIS	LOCATION Y AXIS	CONTACT NUMBER	LOCATION X AXIS	LOCATION Y AXIS	CONTACT NUMBER	LOCATION X AXIS	LOCATION Y AXIS
1	+.050	+.318	15	-.319	[illegible]	29	-.095	-.202
2	+.145	+.286	16	-.318	+.053	30	-.177	-.142
3	+.228	+.230	17	-.287	+.149	31	-.218	-.050
4	+.287	+.149	18	-.228	+.230	32	-.218	+.050
5	+.318	+.053	19	-.145	+.286	33	-.176	+.142
6	+.319	-.047	20	-.050	+.318	34	-.095	+.198
7	+.289	-.143	21	.000	+.235	35	.000	+.131
8	+.232	-.226	22	+.095	+.199	36	+.091	+.000
9	+.151	-.285	23	+.178	+.142	37	+.131	-.017
10	+.056	-.318	24	+.219	+.050	38	+.056	-.101
11	-.055	-.318	25	+.218	-.050	39	-.056	-.131
12	-.151	-.285	26	+.177	-.142	40	[illegible]	[illegible]
13	-.232	-.226	27	+.095	-.202	41	[illegible]	[illegible]
14	-.289	-.143	28	.000	-.235	42	[illegible]	[illegible]

INCHES	MM	INCHES	MM	INCHES	MM	INCHES	MM
.017	.43	.095	2.41	.177	4.50	.231	5.87
.031	.79	.101	2.57	.178	4.52	.232	5.89
.047	1.19	.121	3.07	.198	5.03	.235	5.97
.050	1.27	.142	3.61	.202	5.13	.285	7.24
.153	1.35	.143	3.63	.218	5.54	.286	7.26
.056	1.42	.145	3.68	.226	5.74	.287	7.29
.080	2.03	.149	3.78	.228	5.79	.289	7.34
.091	2.31	.151	3.84	.230	5.84	.318	8.08
						.319	8.10

(Applicable to MIL-C-27599 only.)

Shell size	Arrangement No.	Number of contacts	Size contacts	Service rating	Contact location	Supersedes document
16	-42	42	22	M	All	MS27347-42

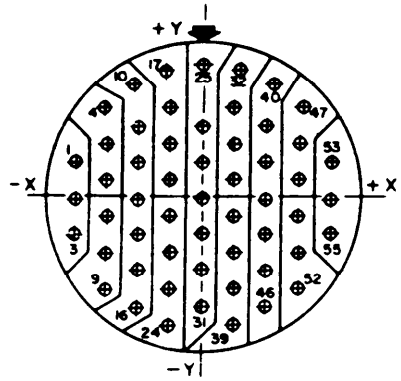

CONTACT LOCATION								
CONTACT NUMBER	LOCATION		CONTACT NUMBER	LOCATION		CONTACT NUMBER	LOCATION	
	X AXIS	Y AXIS		X AXIS	Y AXIS		X AXIS	Y AXIS
1	-.312	+.086	20	-.078	+.041	39	+.078	-.319
2	-.312	-.004	21	-.078	-.049	40	+.172	+.279
3	-.312	-.094	22	-.078	-.139	41	+.156	+.176
4	-.242	+.221	23	-.078	-.229	42	+.156	+.086
5	-.234	+.131	24	-.078	-.319	43	+.156	-.004
6	-.234	+.041	25	0	+.329	44	+.156	-.094
7	-.234	-.049	26	0	+.176	45	+.156	-.184
8	-.234	-.139	27	0	+.086	46	+.156	-.274
9	-.234	-.229	28	0	-.004	47	+.242	+.221
10	-.172	-.279	29	0	-.094	48	+.234	+.131
11	-.156	+.176	30	0	-.184	49	+.234	+.041
12	-.156	+.086	31	0	-.274	50	+.234	-.049
13	-.156	-.004	32	+.089	+.316	51	+.234	-.139
14	-.156	-.094	33	+.078	+.221	52	+.234	-.229
15	-.156	-.184	34	+.078	+.131	53	-.312	+.086
16	-.156	-.274	35	+.078	+.041	54	+.312	-.004
17	-.089	+.316	36	+.078	-.049	55	+.312	-.094
18	-.078	+.221	37	+.078	-.139			
19	-.078	+.131	38	+.078	-.229			

INCHES	MM	INCHES	MM	INCHES	MM
.004	.10	.139	3.53	.234	5.94
.041	1.04	.156	3.96	.242	6.15
.049	1.24	.172	4.37	.274	6.96
.078	1.98	.176	4.47	.279	7.09
.086	2.18	.184	4.67	.312	7.92
.089	2.26	.221	5.61	.316	8.03
.131	3.33	.229	5.82	.319	8.10
				.329	8.36

(Applicable to MIL-C-38999 only.)

Shell size	Arrange-ment No.	Number of contacts	Size contacts	Service rating	Contact location	Supersedes document
16	-35.	55	22D	M	All	MS27520-35

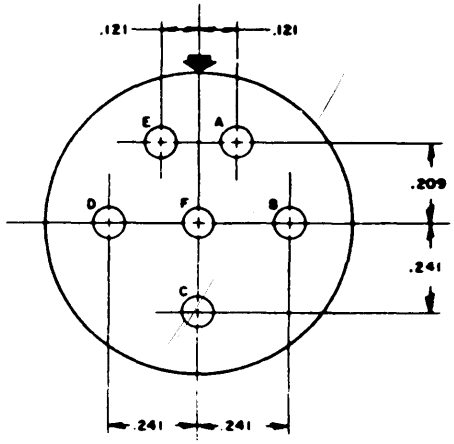

INCHES	MM
.121	3.07
.209	5.31
.241	6.12

Shell size	Arrange-ment No.	Number of contacts	Size contacts	Service rating	Contact location	Supersedes document
16	-6	6	12	I	All	MS27347-6
	-7	6	Shielded, Size 12A	II	All	

SECTION 206

INSERT ARRANGEMENT, ELECTRICAL CONNECTOR

SHELL SIZE 18

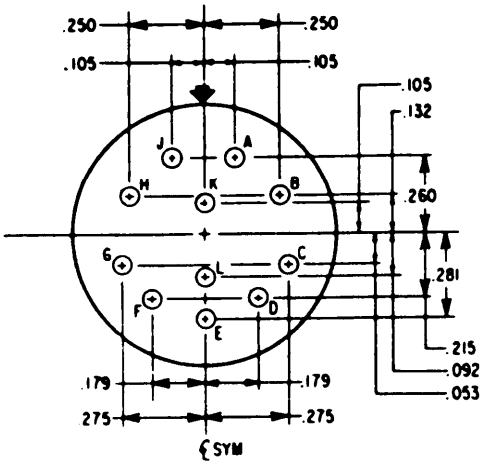

INCHES	MM	INCHES	MM
.053	1.35	.215	5.46
.092	2.34	.250	6.35
.105	2.67	.260	6.60
.132	3.35	.275	6.99
.179	4.55	.281	7.14

Shell size	Arrange-ment No.	Number of contacts	Size contacts	Service rating	Contact location	Supersedes document
18	-11	11	16	II	All	MS27348-11

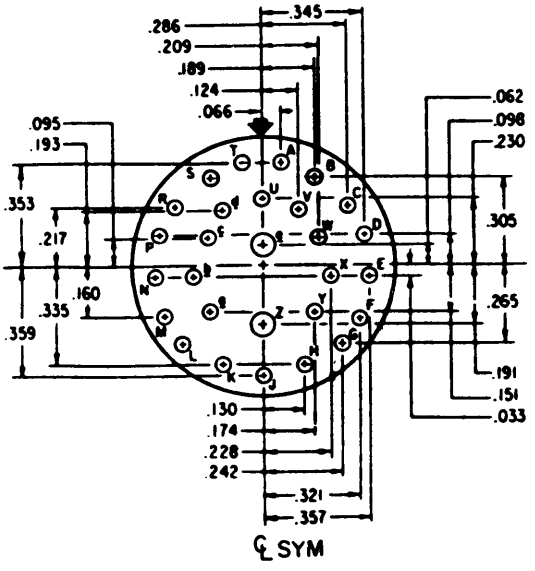

INCHES	MM	INCHES	MM
.033	.84	.151	3.84
.062	1.57	.160	4.06
.066	1.68	.174	4.42
.095	2.41	.189	4.80
.098	2.49	.191	4.85
.124	3.15	.193	4.90
.130	3.30	.209	5.31

INCHES	MM	INCHES	MM
.217	5.51	.321	8.15
.228	5.79	.335	8.51
.230	5.84	.345	8.76
.242	6.15	.353	8.97
.265	6.73	.357	9.07
.286	7.26	.359	9.12
.305	7.75		

Shell size	Arrange-ment No.	Number of contacts	Size contacts	Service rating	Contact location	Supersedes document
18	-28	2 / 26	16 / 20	I	e,z / All others	MS27348-28

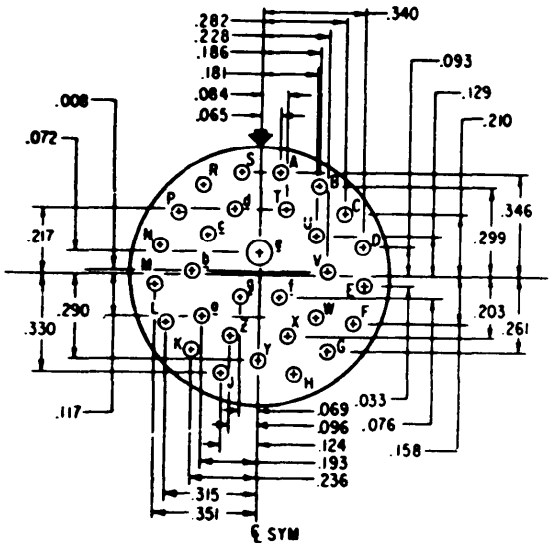

INCHES	MM	INCHES	MM
.008	.20	.096	2.44
.033	.84	.117	2.97
.065	1.65	.124	3.15
.069	1.75	.129	3.28
.072	1.83	.158	4.01
.076	1.93	.181	4.60
.084	2.13	.186	4.72
.093	2.36	.193	4.90

INCHES	MM	INCHES	MM
.203	5.16	.299	7.59
.210	5.33	.315	8.00
.217	5.51	.330	8.38
.228	5.79	.340	8.64
.236	5.99	.346	8.79
.261	6.63	.351	8.92
.282	7.16		
.290	7.37		

Shell size	Arrangement No.	Number of contacts	Size contacts	Service rating	Contact location	Supersedes document
18	-30	1	16	I	e	MS27348-30
		29	20		All others	

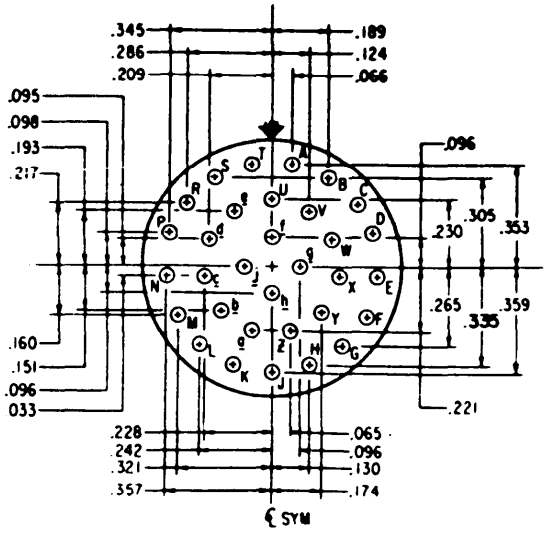

INCHES	MM	INCHES	MM
.033	.84	.130	3.30
.065	1.65	.151	3.84
.066	1.68	.160	4.06
.095	2.41	.174	4.42
.096	2.44	.189	4.80
.098	2.49	.193	4.90
.124	3.15	.209	5.31

INCHES	MM	INCHES	MM
.217	5.51	.305	7.75
.221	5.61	.321	8.15
.228	5.79	.335	8.51
.230	5.84	.345	8.76
.242	6.15	.353	8.97
.265	6.73	.357	9.07
.286	7.26	.359	9.12

Shell size	Arrangement No.	Number of contacts	Size contacts	Service rating	Contact location	Supersedes document
18	-32	32	20	I	All	MS27348-32

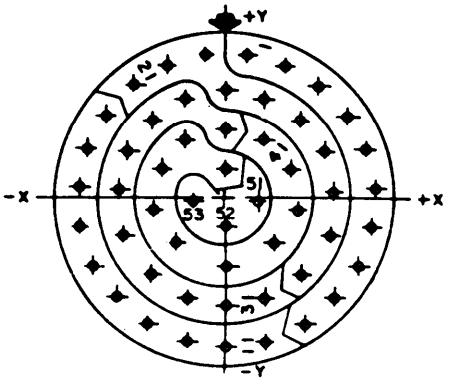

CONTACT LOCATION

CONTACT NUMBER	LOCATION X AXIS	LOCATION Y AXIS	CONTACT NUMBER	LOCATION X AXIS	LOCATION Y AXIS	CONTACT NUMBER	LOCATION X AXIS	LOCATION Y AXIS	CONTACT NUMBER	LOCATION X AXIS	LOCATION Y AXIS
1	+.050	+.364	15	-.269	-.251	29	+.260	-.094	43	+.178	-.032
2	+.146	+.336	16	-.328	-.170	30	+.184	-.195	44	+.120	-.114
3	+.232	+.284	17	-.360	-.075	31	+.099	-.252	45	.000	-.168
4	+.301	+.212	18	-.367	+.025	32	.000	-.268	46	-.120	-.114
5	+.347	+.123	19	-.347	+.123	33	-.099	-.252	47	-.178	-.032
6	+.367	+.025	20	-.301	+.212	34	-.184	-.195	48	-.158	+.068
7	+.360	-.075	21	-.232	+.284	35	-.260	-.094	49	-.096	+.145
8	+.328	-.170	22	-.146	+.336	36	-.266	+.018	50	.000	+.076
9	+.269	-.251	23	-.050	+.364	37	-.245	+.116	51	+.080	-.002
10	+.191	-.314	24	.000	+.276	38	-.183	+.195	52	.000	-.068
11	+.099	-.354	25	+.096	+.248	39	-.096	+.248	53	-.080	-.002
12	.000	-.368	26	+.183	+.195	40	.000	+.176			
13	-.099	-.354	27	+.245	+.116	41	+.096	+.145			
14	-.191	-.314	28	+.266	+.018	42	+.158	+.068			

INCHES	MM	INCHES	MM	INCHES	MM	INCHES	MM	INCHES	MM
.002	.05	.096	2.44	.170	4.32	.248	6.30	.314	7.98
.018	.46	.099	2.51	.176	4.47	.251	6.38	.328	8.33
.025	.64	.114	2.90	.178	4.52	.252	6.40	.336	8.53
.032	.81	.116	2.95	.183	4.65	.260	6.60	.347	8.81
.050	1.27	.120	3.05	.184	4.67	.266	6.76	.354	8.99
.068	1.73	.123	3.12	.191	4.85	.268	6.81	.360	9.14
.075	1.91	.145	3.68	.195	4.95	.269	6.83	.364	9.25
.076	1.93	.146	3.71	.212	5.38	.276	7.01	.367	9.32
.080	2.03	.158	4.01	.232	5.89	.284	7.21	.368	9.35
.094	2.39	.168	4.27	.245	6.22	.301	7.65		

(Inactive for new design for MIL-C-38999)

Shell size	Arrange-ment No.	Number of contacts	Size contacts	Service rating	Contact location	Supersedes document
18	-53	53	22	M	All	MS27348-53

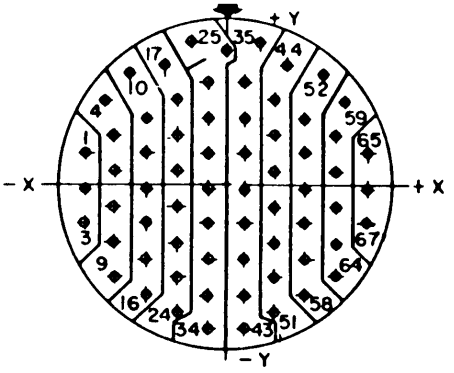

CONTACT LOCATION								
CONTACT NUMBER	LOCATION X AXIS	LOCATION Y AXIS	CONTACT NUMBER	LOCATION X AXIS	LOCATION Y AXIS	CONTACT NUMBER	LOCATION X AXIS	LOCATION Y AXIS
1	-.357	+.081	24	-.123	-.324	47	+.123	+.036
2	-.357	-.009	25	-.088	+.360	48	+.123	-.054
3	-.357	-.099	26	-.000	+.339	49	+.123	-.144
4	-.304	+.213	27	-.045	+.261	50	+.123	-.234
5	-.279	+.126	28	-.045	+.171	51	+.123	-.324
6	-.279	+.036	29	-.045	+.081	52	+.244	+.280
7	-.279	-.054	30	-.045	-.009	53	+.201	+.171
8	-.279	-.144	31	-.045	-.099	54	+.201	+.081
9	-.279	-.234	32	-.045	-.189	55	+.201	-.009
10	-.244	+.280	33	-.045	-.279	56	+.201	-.099
11	-.201	+.171	34	-.045	-.369	57	+.201	-.189
12	-.201	+.081	35	+.088	+.360	58	+.201	-.279
13	-.201	-.009	36	+.045	+.261	59	+.304	+.213
14	-.201	-.099	37	+.045	+.171	60	+.279	+.126
15	-.201	-.189	38	+.045	+.081	61	+.279	+.036
16	-.201	-.279	39	+.045	-.009	62	+.279	-.054
17	-.156	+.301	40	+.045	-.099	63	+.279	-.144
18	-.123	+.216	41	+.045	-.189	64	+.279	-.234
19	-.123	+.126	42	+.045	-.279	65	+.357	+.081
20	-.123	+.036	43	+.045	-.369	66	+.357	-.009
21	-.123	-.054	44	+.156	+.301	67	+.357	-.099
22	-.123	-.144	45	+.123	+.216			
23	-.123	-.234	46	+.123	+.126			

INCHES	MM	INCHES	MM	INCHES	MM	INCHES	MM
.009	.23	.123	3.12	.213	5.41	.301	7.65
.036	.91	.126	3.20	.216	5.49	.304	7.72
.045	1.14	.144	3.66	.234	5.94	.324	8.23
.054	1.37	.156	3.96	.244	6.20	.339	8.61
.081	2.06	.171	4.34	.261	6.63	.357	9.07
.088	2.24	.189	4.80	.279	7.09	.360	9.14
.099	2.51	.201	5.11	.280	7.11	.369	9.37

(Inactive for new design for MIL-C-38999.)

Shell size	Arrange-ment No.	Number of contacts	Size contacts	Service rating	Contact location	Supersedes document
18	-67	67	22M	M	All	MS27348-67

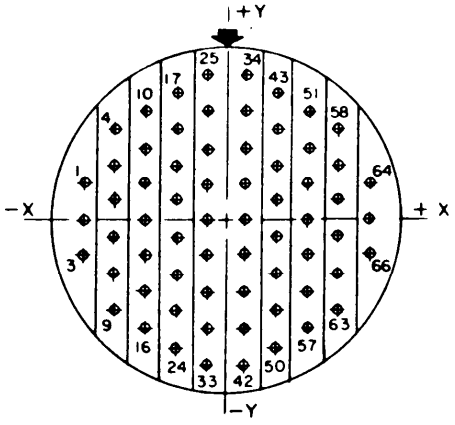

INCHES	MM	INCHES	MM
.045	1.14	.225	5.72
.090	2.29	.270	6.86
.123	3.12	.279	7.09
.135	3.43	.315	8.00
.180	4.57	.357	9.07
.201	5.11	.360	9.14

CONTACT LOCATION

CONT NO	LOCATION X AXIS	LOCATION Y AXIS	CONT NO	LOCATION X AXIS	LOCATION Y AXIS	CONT NO	LOCATION X AXIS	LOCATION Y AXIS
1	-.357	+.090	24	-.123	-.315	47	+.123	-.045
2	-.357	0	25	-.045	+.360	48	+.123	-.135
3	-.357	-.090	26	-.045	+.270	49	+.123	-.225
4	-.279	+.225	27	-.045	+.180	50	+.123	-.315
5	-.279	+.135	28	-.045	+.090	51	+.201	+.270
6	-.279	+.045	29	-.045	0	52	+.201	+.180
7	-.279	-.045	30	-.045	-.090	53	+.201	+.090
8	-.279	-.135	31	-.045	-.180	54	+.201	0
9	-.279	-.225	32	-.045	-.270	55	+.201	-.090
10	-.201	+.270	33	-.045	-.360	56	+.201	-.180
11	-.201	+.180	34	+.045	+.360	57	+.201	-.270
12	-.201	+.090	35	+.045	+.270	58	+.279	+.225
13	-.201	0	36	+.045	+.180	59	+.279	+.135
14	-.201	-.090	37	+.045	+.090	60	+.279	+.045
15	-.201	-.180	38	+.045	0	61	+.279	-.045
16	-.201	-.270	39	+.045	-.090	62	+.279	-.135
17	-.123	+.315	40	+.045	-.180	63	+.279	-.225
18	-.123	+.225	41	+.045	-.270	64	+.357	+.090
19	-.123	+.135	42	+.045	-.360	65	+.357	0
20	-.123	+.045	43	+.123	+.315	66	+.357	-.090
21	-.123	-.045	44	+.123	+.225			
22	-.123	-.135	45	+.123	+.135			
23	-.123	-.225	46	+.123	+.045			

(Applicable to MIL-C-38999 only.)

Shell size	Arrangement No.	Number of contacts	Size contacts	Service rating	Contact location	Supersedes document
18	-35	66	22D	M	All	MS27521-35

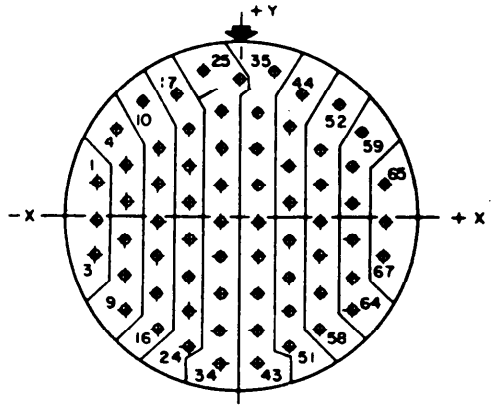

CONTACT LOCATION

CONT NO	LOCATION X AXIS	LOCATION Y AXIS	CONT NO	LOCATION X AXIS	LOCATION Y AXIS	CONT NO	LOCATION X AXIS	LOCATION Y AXIS
1	-.357	+.081	24	-.123	-.324	47	+.123	+.036
2	-.357	-.009	25	-.088	+.360	48	+.123	-.054
3	-.357	-.099	26	0	+.339	49	+.123	-.144
4	-.304	+.213	27	-.045	+.261	50	+.123	-.234
5	-.279	+.126	28	-.045	+.171	51	+.123	-.324
6	-.279	+.036	29	-.045	+.081	52	+.244	+.280
7	-.279	-.054	30	-.045	-.009	53	+.201	+.171
8	-.279	-.144	31	-.045	-.099	54	+.201	+.081
9	-.279	-.234	32	-.045	-.189	55	+.201	-.009
10	-.244	+.280	33	-.045	-.279	56	+.201	-.099
11	-.201	+.171	34	-.045	-.369	57	+.201	-.189
12	-.201	+.081	35	+.088	+.360	58	+.201	-.279
13	-.201	-.009	36	+.045	+.261	59	+.304	+.213
14	-.201	-.099	37	+.045	+.171	60	+.279	+.126
15	-.201	-.189	38	+.045	+.081	61	+.279	+.036
16	-.201	-.279	39	+.045	-.009	62	+.279	-.054
17	-.156	+.301	40	+.045	-.099	63	+.279	-.144
18	-.123	+.216	41	+.045	-.189	64	+.279	-.234
19	-.123	+.126	42	+.045	-.279	65	+.357	+.081
20	-.123	+.036	43	+.045	-.369	66	+.357	-.009
21	-.123	-.054	44	+.156	+.301	67	+.357	-.099
22	-.123	-.144	45	+.123	+.216			
23	-.123	-.234	46	+.123	+.126			

INCHES	MM	INCHES	MM	INCHES	MM	INCHES	MM
.009	.23	.123	3.12	.213	5.41	.301	7.65
.036	.91	.126	3.20	.216	5.49	.304	7.72
.045	1.14	.144	3.66	.234	5.94	.324	8.23
.054	1.37	.156	3.96	.244	6.20	.339	8.61
.081	2.06	.171	4.34	.261	6.63	.357	9.07
.088	2.24	.189	4.80	.279	7.09	.360	9.14
.099	2.51	.201	5.11	.280	7.11	.369	9.37

(Applicable to MIL-C-38999 only.)

Shell size	Arrange-ment No.	Number of contacts	Size contacts	Service rating	Contact location	Supersedes document
18	-45	67	22D	M	All	MS27521-45

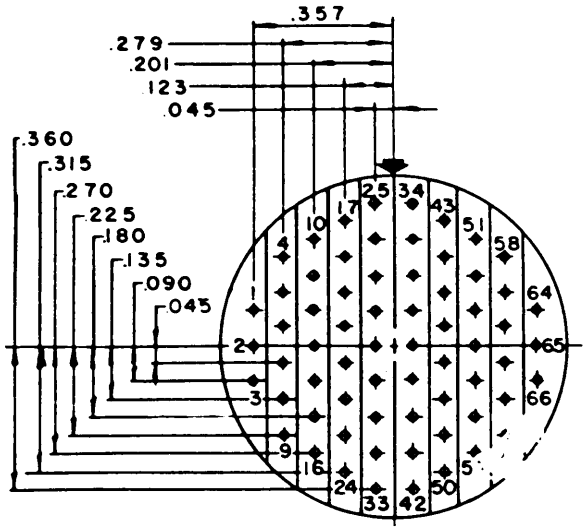

INCHES	MM	INCHES	MM
.045	1.14	.225	5.72
.090	2.29	.270	6.86
.123	3.12	.279	7.09
.135	3.43	.315	8.00
.180	4.57	.357	9.07
.201	5.11	.360	9.14

(Inactive for new design for MIL-C-38999.)

Shell size	Arrange-ment No.	Number of contacts	Size contacts	Service rating	Contact location	Supersedes document
18	-66	66	22M	M	All	MS27348-66

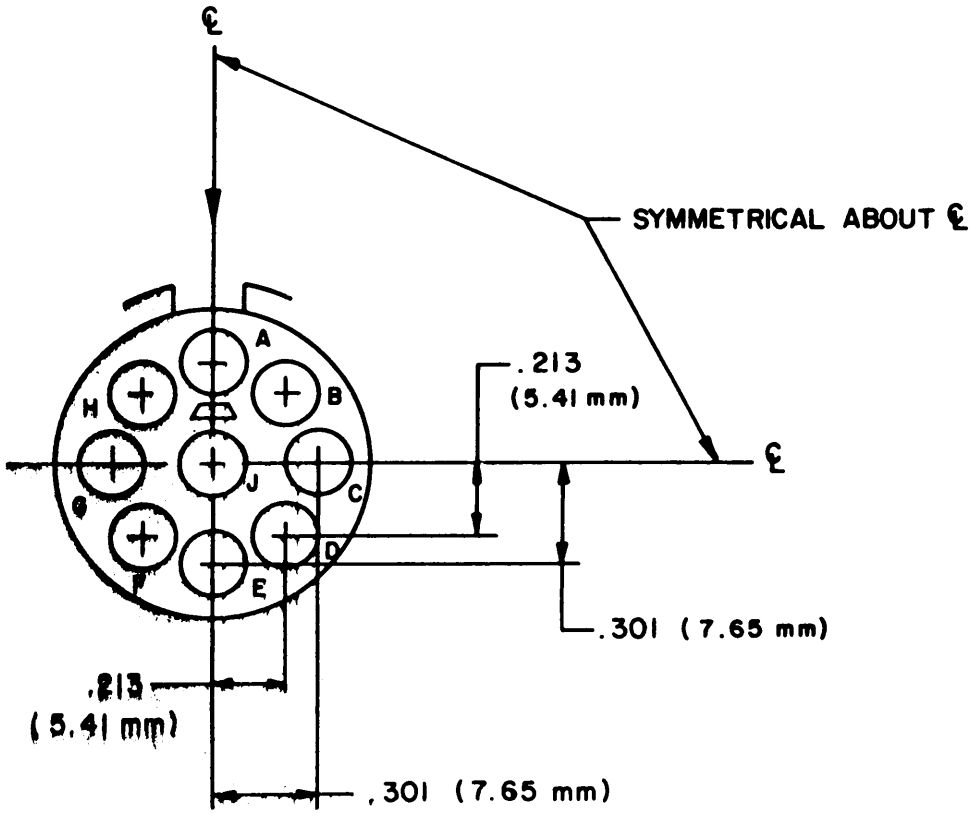

SHELL SIZE	ARRANGE-MENT NO.	NUMBER OF CONTACTS	SIZE CONTACTS	SERVICE RATING	CONTACT LOCATION
18	-96	9	12	I	All

SECTION 207

INSERT ARRANGEMENT, ELECTRICAL CONNECTOR

SHELL SIZE 20

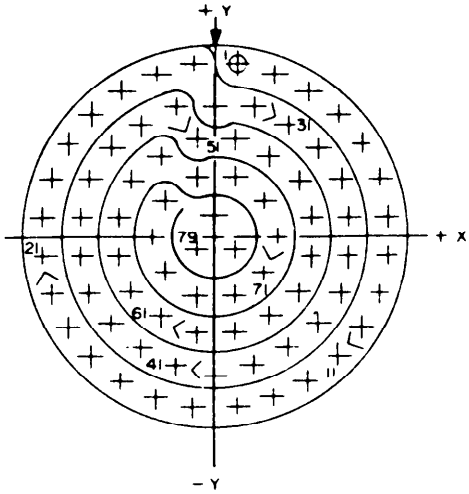

CONTACT HOLE LOCATION			CONTACT HOLE LOCATION		
CONTACT NUMBER	LOCATION X AXIS	LOCATION Y AXIS	CONTACT NUMBER	LOCATION X AXIS	LOCATION Y AXIS
1	+.053	+.426	41	-.098	-.322
2	+.146	+.404	42	-.184	-.280
3	+.232	+.362	43	-.258	-.220
4	+.306	+.302	44	-.311	-.141
5	+.365	+.227	45	-.332	-.048
6	+.406	+.141	46	-.332	+.048
7	+.427	+.048	47	-.311	+.141
8	+.427	-.048	48	-.258	+.220
9	+.406	-.141	49	-.184	+.280
10	+.365	-.227	50	-.098	+.322
11	+.306	-.302	51	-.048	+.241
12	+.232	-.362	52	+.048	+.241
13	+.146	-.404	53	+.134	+.199
14	+.053	-.426	54	+.208	+.139
15	-.053	-.426	55	+.237	+.048
16	-.146	-.404	56	+.237	-.048
17	-.232	-.362	57	+.208	-.139
18	-.306	-.302	58	+.134	-.199
19	-.365	-.227	59	+.048	-.241
20	-.406	-.141	60	-.048	-.241
21	-.427	-.048	61	-.134	-.199
22	-.427	+.048	62	-.208	-.139
23	-.406	+.141	63	-.237	-.048
24	-.365	+.227	64	-.237	+.048
25	-.306	+.302	65	-.208	+.139
26	-.232	+.362	66	-.134	+.199
27	-.146	+.404	67	-.048	+.146
28	-.053	+.426	68	+.048	+.146
29	.000	+.323	69	+.125	+.090
30	+.098	+.322	70	+.155	.000
31	+.184	+.280	71	+.125	-.090
32	+.258	+.220	72	+.048	-.146
33	+.311	+.141	73	-.048	-.146
34	+.332	+.048	74	-.125	-.090
35	+.332	-.048	75	-.155	.000
36	+.311	-.141	76	-.125	+.090
37	+.258	-.220	77	.000	+.053
38	+.184	-.280	78	+.048	-.029
39	+.098	-.322	79	-.048	-.029
40	.000	-.347			

INCH	MM	INCH	MM	INCH	MM	INCH	MM
.029	.74	.146	3.71	.241	6.12	.332	8.43
.048	1.22	.155	3.94	.258	6.55	.347	8.81
.053	1.35	.184	4.67	.280	7.11	.362	9.19
.090	2.29	.199	5.05	.302	7.67	.365	9.27
.098	2.49	.208	5.28	.306	7.77	.404	10.26
.125	3.18	.220	5.59	.311	7.90	.406	10.31
.134	3.40	.227	5.77	.322	8.18	.426	10.82
.139	3.53	.232	5.89	.323	8.20	.427	10.85
.141	3.58	.237	6.02				

(Inactive for new design for MIL-C-38999.)

Shell size	Arrange-ment No.	Number of contacts	Size contacts	Service rating	Contact location	Supersedes document
20	-1	79	22M	M	All	MS27349-1

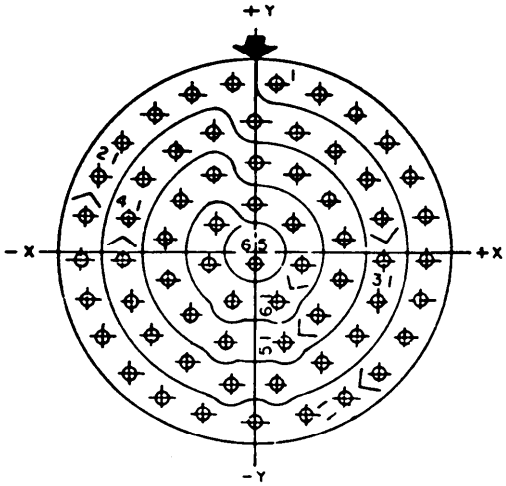

CONTACT HOLE LOCATION					
CONTACT NUMBER	LOCATION		CONTACT NUMBER	LOCATION	
	X AXIS	Y AXIS		X AXIS	Y AXIS
1	+.052	+.424	34	+.165	-.273
2	+.154	+.399	35	+.053	-.331
3	+.246	+.348	36	-.053	-.331
4	+.326	+.280	37	-.165	-.273
5	+.382	+.191	38	-.252	-.210
6	+.417	+.092	39	-.305	-.119
7	+.425	-.013	40	-.320	-.015
8	+.410	-.117	41	-.312	+.090
9	+.370	-.214	42	-.274	+.188
10	+.308	.299	43	-.194	+.256
11	+.224	-.362	44	-.102	+.307
12	+.128	.405	45	.000	+.227
13	.000	-.422	46	+.102	+.202
14	-.128	-.405	47	+.183	+.135
15	-.224	-.362	48	+.220	+.037
16	-.308	-.299	49	+.213	-.068
17	-.370	-.214	50	+.158	-.158
18	-.410	-.117	51	+.072	-.224
19	-.425	-.013	52	-.072	-.224
20	-.417	+.092	53	-.158	-.158
21	-.382	+.191	54	-.213	-.068
22	-.326	+.280	55	-.220	+.037
23	-.246	+.348	56	-.183	+.135
24	-.154	+.399	57	-.102	+.202
25	-.052	+.424	58	.000	+.122
26	.000	+.332	59	+.095	+.075
27	+.102	+.307	60	+.115	-.029
28	+.194	+.256	61	+.056	-.120
29	+.274	+.188	62	-.056	-.120
30	+.312	+.090	63	-.115	-.029
31	+.320	-.015	64	-.095	+.075
32	+.305	-.119	65	.000	-.029
33	+.252	-.210			

INCH	MM	INCH	MM	INCH	MM	INCH	MM	INCH	MM	INCH	MM
.013	.33	.092	2.34	.154	3.91	.214	5.44	.299	7.59	.362	9.19
.015	.38	.095	2.41	.158	4.01	.220	5.59	.305	7.75	.370	9.40
.029	.74	.102	2.59	.165	4.19	.224	5.69	.307	7.80	.382	9.70
.037	.94	.115	2.92	.183	4.65	.227	5.77	.308	7.82	.399	10.13
.052	1.32	.117	2.97	.188	4.78	.246	6.25	.312	7.92	.405	10.29
.053	1.35	.119	3.02	.191	4.85	.252	6.40	.320	8.13	.410	10.41
.056	1.42	.120	3.05	.194	4.93	.256	6.50	.326	8.28	.417	10.59
.068	1.73	.122	3.10	.202	5.13	.273	6.93	.331	8.41	.422	10.72
.075	1.91	.128	3.25	.210	5.33	.274	6.96	.332	8.43	.424	10.77
.090	2.29	.135	3.43	.213	5.41	.280	7.11	.348	8.84	.425	10.80

(Inactive for new design for MIL-C-38999.)

Shell size	Arrange-ment No.	Number of contacts	Size contacts	Service rating	Contact location	Supersedes document
20	-2	65	22	M	All	MS27349-2

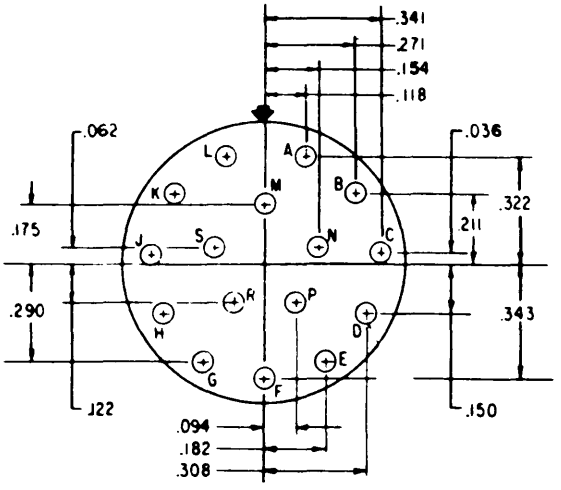

INCH	MM	INCH	MM
.036	.91	.182	4.62
.062	1.57	.211	5.36
.094	2.39	.271	6.88
.118	3.00	.290	7.37
.122	3.10	.308	7.82
.150	3.81	.322	8.18
.154	3.91	.341	8.66
.175	4.45	.343	8.71

Shell size	Arrange-ment No.	Number of contacts	Size contacts	Service rating	Contact location	Supersedes document
20	-16	16	16	II	All	MS27349-16

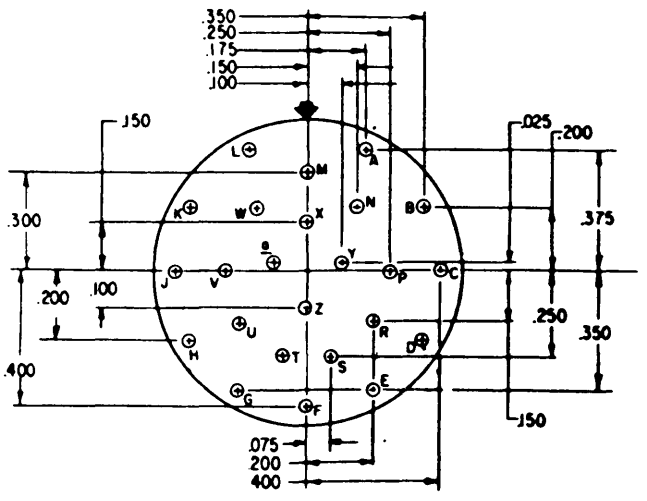

INCH	MM	INCH	MM
.025	.64	.250	6.35
.075	1.91	.300	7.62
.100	2.54	.350	8.89
.150	3.81	.375	9.53
.175	4.45	.400	10.16
.200	5.08		

Shell size	Arrange-ment No.	Number of contacts	Size contacts	Service rating	Contact location	Supersedes document
20	-24	24	20	I	All	MS27349-24

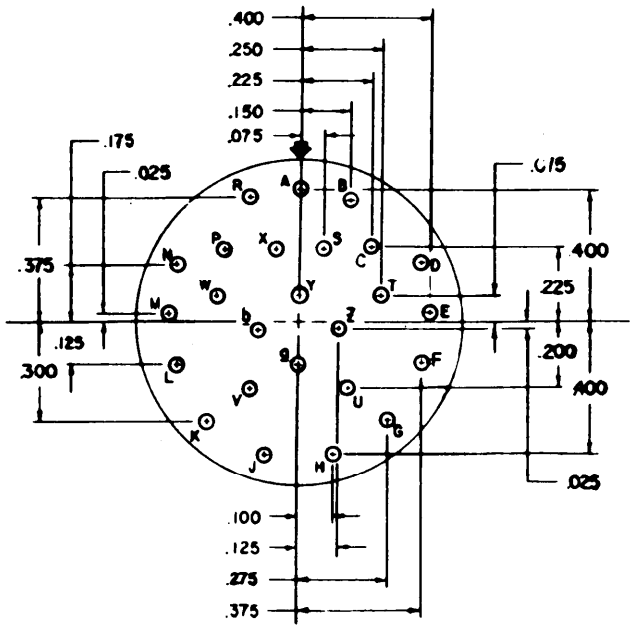

INCH	MM	INCH	MM
.025	.64	.225	5.72
.075	1.91	.250	6.35
.100	2.54	.275	6.99
.125	3.18	.300	7.62
.150	3.81	.375	9.53
.175	4.45	.400	10.16
.200	5.08		

Shell size	Arrange-ment No.	Number of contacts	Size contacts	Service rating	Contact location	Supersedes document
20	-25	25	20	I	All	MS27349-25

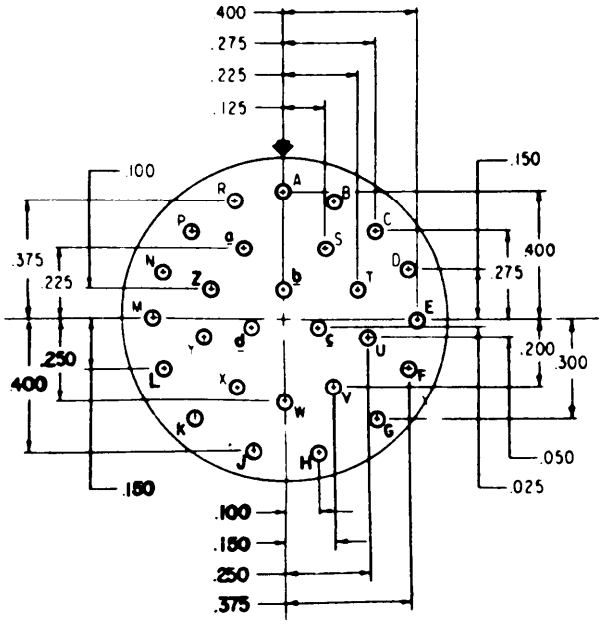

INCH	MM	INCH	MM
.025	.64	.225	5.72
.050	1.27	.250	6.35
.100	2.54	.275	6.99
.125	3.18	.300	7.62
.150	3.81	.375	9.53
.200	5.08	.400	10.16

Shell size	Arrange-ment No.	Number of contacts	Size contacts	Service rating	Contact location	Supersedes document
20	-27	27	20	I	All	MS27349-27

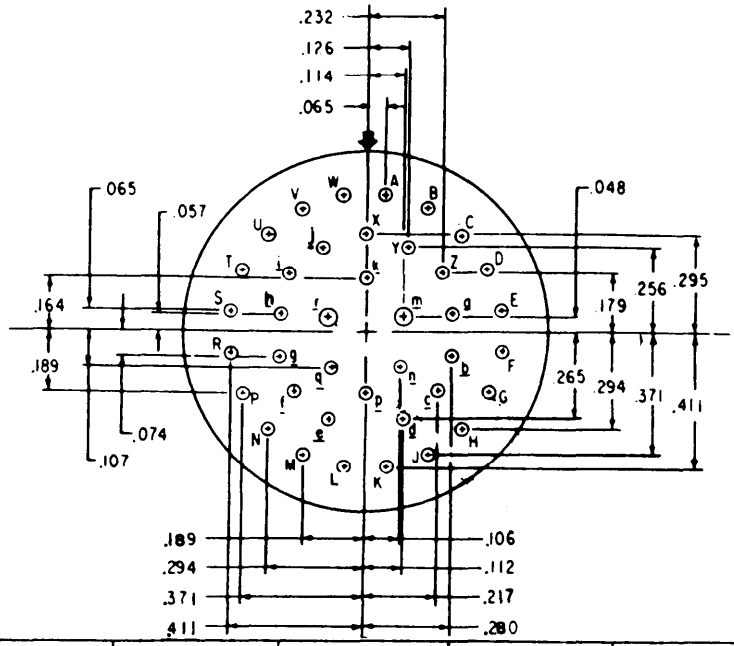

INCH	MM	INCH	MM
.048	1.22	.189	4.80
.057	1.45	.217	5.51
.065	1.65	.232	5.89
.074	1.88	.256	6.50
.106	2.69	.265	6.73
.107	2.72	.280	7.11
.112	2.84	.294	7.47
.114	2.90	.295	7.49
.126	3.20	.371	9.42
.164	4.17	.411	10.44
.179	4.55		

Shell size	Arrangement No.	Number of contacts	Size contacts	Service rating	Contact location	Supersedes document
20	-39	2	16	I	m, r	MS27349-39
		37	20		All others	

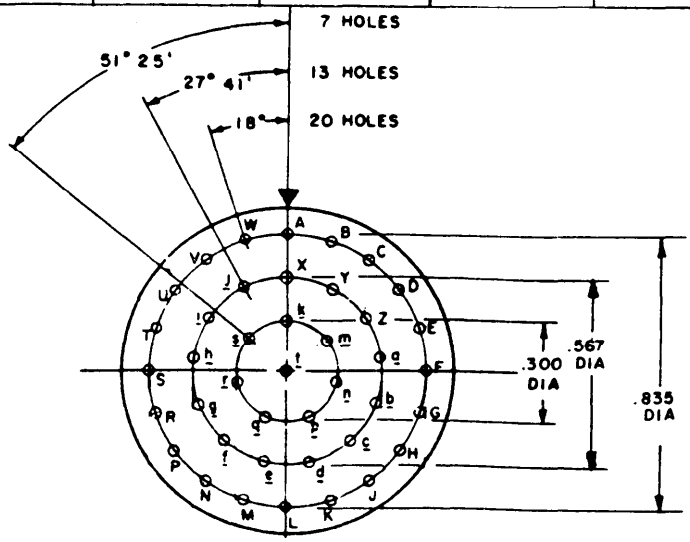

INCH	MM
.300	7.62
.567	14.40
.835	21.21

Shell size	Arrangement No.	Number of contacts	Size contacts	Service rating	Contact location	Supersedes document
20	-41	41	20	I	All	MS27349-41

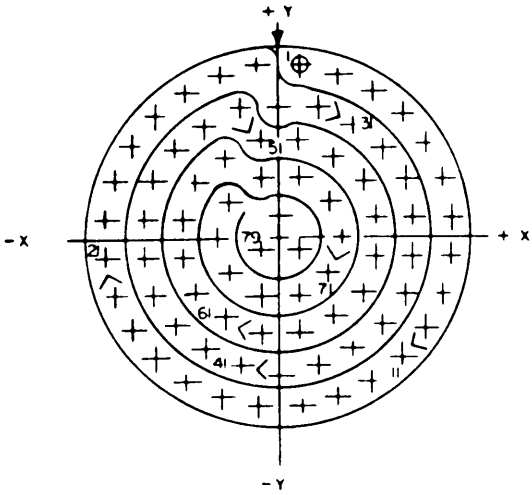

CONTACT HOLE LOCATION			CONTACT HOLE LOCATION		
CONTACT NUMBER	LOCATION X AXIS	LOCATION Y AXIS	CONTACT NUMBER	LOCATION X AXIS	LOCATION Y AXIS
1	+.053	+.426	41	-.098	-.322
2	+.146	+.404	42	-.184	-.280
3	+.232	+.362	43	-.258	-.220
4	+.306	+.302	44	-.311	-.141
5	+.365	+.227	45	-.332	-.048
6	+.406	+.141	46	-.332	+.048
7	+.427	+.048	47	-.311	+.141
8	+.427	-.048	48	-.258	+.220
9	+.406	-.141	49	-.184	+.280
10	+.365	-.227	50	-.098	+.322
11	+.306	-.302	51	-.048	+.241
12	+.232	-.362	52	+.048	+.241
13	+.146	-.404	53	+.134	+.199
14	+.053	-.426	54	+.208	+.139
15	-.053	-.426	55	+.237	+.048
16	-.146	-.404	56	+.237	-.048
17	-.232	-.362	57	+.208	-.139
18	-.306	-.302	58	+.134	-.199
19	-.365	-.227	59	+.048	-.241
20	-.406	-.141	60	-.048	-.241
21	-.427	-.048	61	-.134	-.199
22	-.427	+.048	62	-.208	-.139
23	-.406	+.141	63	-.237	-.048
24	-.365	+.227	64	-.237	+.048
25	-.306	+.302	65	-.208	+.139
26	-.232	+.362	66	-.134	+.199
27	-.146	+.404	67	-.048	+.146
28	-.053	+.426	68	+.048	+.146
29	.000	+.323	69	+.125	+.090
30	+.098	+.322	70	+.155	.000
31	+.184	+.280	71	+.125	-.090
32	+.258	+.220	72	+.048	-.146
33	+.311	+.141	73	-.048	-.146
34	+.332	+.048	74	-.125	-.090
35	+.332	-.048	75	-.155	.000
36	+.311	-.141	76	-.125	+.090
37	+.258	-.220	77	.000	+.053
38	+.184	-.280	78	+.048	-.029
39	+.098	-.322	79	-.048	-.029
40	.000	-.347			

INCH	MM	INCH	MM	INCH	MM	INCH	MM
.029	.74	.146	3.71	.241	6.12	.332	8.43
.048	1.22	.155	3.94	.258	6.55	.347	8.81
.053	1.35	.184	4.67	.280	7.11	.362	9.19
.090	2.29	.199	5.05	.302	7.67	.365	9.27
.098	2.49	.208	5.28	.306	7.77	.404	10.26
.125	3.18	.220	5.59	.311	7.90	.406	10.31
.134	3.40	.227	5.77	.322	8.18	.426	10.82
.139	3.53	.232	5.89	.323	8.20	.427	10.85
.141	3.58	.237	6.02				

(Applicable to MIL-C-38999 only.)

Shell size	Arrange-ment No.	Number of contacts	Size contacts	Service rating	Contact location	Supersedes document
20	-35	79	22D	M	All	MS27522-35

SECTION 208

INSERT ARRANGEMENT, ELECTRICAL CONNECTOR

SHELL SIZE 22

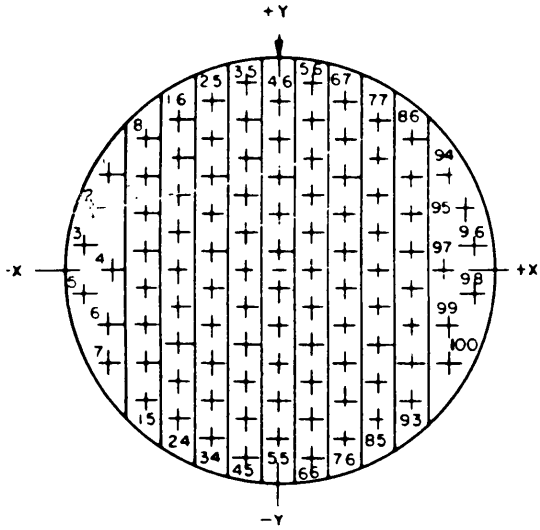

CONTACT HOLE LOCATION			CONTACT HOLE LOCATION		
CONTACT NUMBER	LOCATION X AXIS	LOCATION Y AXIS	CONTACT NUMBER	LOCATION X AXIS	LOCATION Y AXIS
1	-.428	+.241	51	.000	-.047
2	-.467	+.154	52		-.142
3	-.488	+.061	53		-.237
4	-.415	.000	54		-.332
5	-.488	-.061	55		-.427
6	-.428	-.142	56	+.083	+.475
7	-.428	-.237	57		+.380
8	-.332	+.333	58		+.285
9		+.238	59		+.190
10		+.143	60		+.095
11		+.048	61		.000
12		-.047	62		-.095
13		-.142	63		-.190
14		-.237	64		-.285
15		-.332	65		-.380
16	-.249	+.380	66		-.475
17		+.285	67	+.166	+.428
18		+.190	68		+.333
19		+.095	69		+.238
20		.000	70		+.143
21		-.095	71		+.048
22		-.190	72		-.047
23		-.285	73		-.142
24		-.380	74		-.237
25	-.166	+.428	75		-.332
26		+.333	76		-.427
27		+.238	77	+.249	+.380
28		+.143	78		+.285
29		+.048	79		+.190
30		-.047	80		+.095
31		-.142	81		.000
32		-.237	82		-.095
33		-.332	83		-.190
34		-.427	84		-.285
35	-.083	+.475	85		-.380
36		+.380	86	+.332	+.333
37		+.285	87		+.238
38		+.190	88		+.143
39		+.095	89		+.048
40		.000	90		-.047
41		-.095	91		-.142
42		-.190	92		-.237
43		-.285	93		-.332
44		-.380	94	+.428	+.241
45		-.475	95	+.467	+.154
46	.000	+.428	96	+.488	+.061
47		+.333	97	+.415	.000
48		+.238	98	+.488	-.061
49		+.143	99	+.428	-.142
50		+.048	100	+.428	-.237

INCH	MM	INCH	MM	INCH	MM	INCH	MM
.047	1.19	.143	3.63	.241	6.12	.415	10.54
.048	1.22	.154	3.91	.249	6.32	.427	10.85
.061	1.55	.166	4.22	.285	7.24	.428	10.87
.083	2.11	.190	4.83	.332	8.43	.467	11.86
.095	2.41	.237	6.02	.333	8.46	.475	12.07
.142	3.61	.238	6.05	.380	9.65	.488	12.40

(Inactive for new design for MIL-C-38999.)

Shell size	Arrangement No.	Number of contacts	Size contacts	Service rating	Contact location	Supersedes document
22	-1	100	22M	M	All	MS27350-1

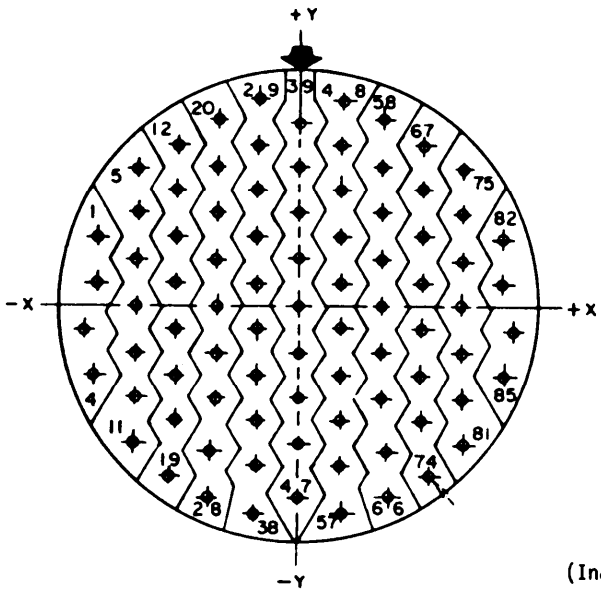

(Inactive for new design for MIL-C-38999.)

CONTACT LOCATION								
CONTACT NUMBER	LOCATION X AXIS	LOCATION Y AXIS	CONTACT NUMBER	LOCATION X AXIS	LOCATION Y AXIS	CONTACT NUMBER	LOCATION X AXIS	LOCATION Y AXIS
1	-.455	+.159	30	-.091	+.371	59	+.182	+.318
2	-.455	+.053	31	-.091	+.265	60	+.182	+.212
3	-.482	-.053	32	-.091	+.159	61	+.182	+.103
4	-.455	-.159	33	-.091	+.053	62	+.182	.000
5	-.364	+.318	34	-.091	-.053	63	+.182	-.106
6	-.364	+.212	35	-.091	-.159	64	+.182	-.212
7	-.364	+.106	36	-.091	-.265	65	+.182	-.318
8	-.364	.000	37	-.091	-.371	66	+.192	-.446
9	-.364	-.106	38	-.091	-.477	67	+.273	+.371
10	-.364	-.212	39	.000	+.424	68	+.273	+.265
11	-.364	-.318	40	.000	+.318	69	+.273	+.159
12	-.273	+.371	41	.000	+.212	70	+.273	+.053
13	-.273	+.265	42	.000	+.106	71	+.273	-.053
14	-.273	+.159	43	.000	.000	72	+.273	-.159
15	-.273	+.053	44	.000	-.106	73	+.273	-.265
16	-.273	-.053	45	.000	-.212	74	+.287	-.390
17	-.273	-.159	46	.000	-.318	75	+.364	+.318
18	-.273	-.265	47	.000	-.424	76	+.364	+.212
19	-.287	-.390	48	+.091	+.477	77	+.364	+.106
20	-.182	+.424	49	+.091	+.371	78	+.364	.000
21	-.182	+.318	50	+.091	+.265	79	+.364	-.106
22	-.182	+.212	51	+.091	+.159	80	+.364	-.212
23	-.182	+.106	52	+.091	+.053	81	+.364	-.318
24	-.182	.000	53	+.091	-.053	82	+.455	+.159
25	-.182	-.106	54	+.091	-.159	83	+.455	+.053
26	-.182	-.212	55	+.091	-.265	84	+.482	-.053
27	-.182	-.318	56	+.091	-.371	85	+.455	-.159
28	-.192	-.446	57	+.091	-.477			
29	-.091	+.477	58	+.182	+.424			

INCH	MM
.053	1.35
.091	2.31
.106	2.69
.159	4.04
.182	4.62
.192	4.88
.212	5.38
.265	6.73
.273	6.93
.287	7.29
.318	8.08
.364	9.25
.371	9.42
.390	9.91
.424	10.77
.446	11.33
.455	11.56
.477	12.12
.482	12.24

Shell size	Arrangement No.	Number of contacts	Size contacts	Service rating	Contact location	Supersedes document
22	-2	85	22	M	All	MS27350-2

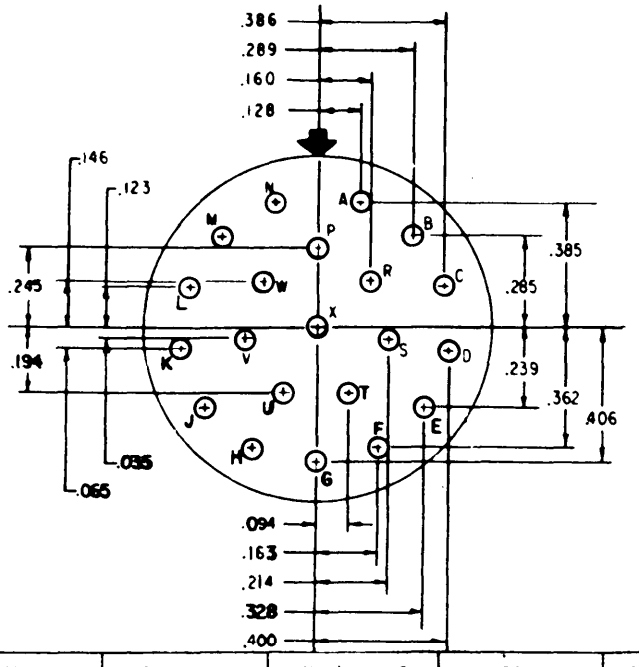

INCH	MM	INCH	MM
.035	.89	.239	6.07
.065	1.65	.245	6.22
.094	2.39	.285	7.24
.123	3.12	.289	7.34
.128	3.25	.328	8.33
.146	3.71	.362	9.19
.160	4.06	.385	9.78
.183	4.65	.386	9.80
.194	4.93	.400	10.16
.214	5.44	.406	10.31

Shell size	Arrange-ment No.	Number of contacts	Size contacts	Service rating	Contact location	Supersedes document
22	-21	21	16	II	All	MS27350-21

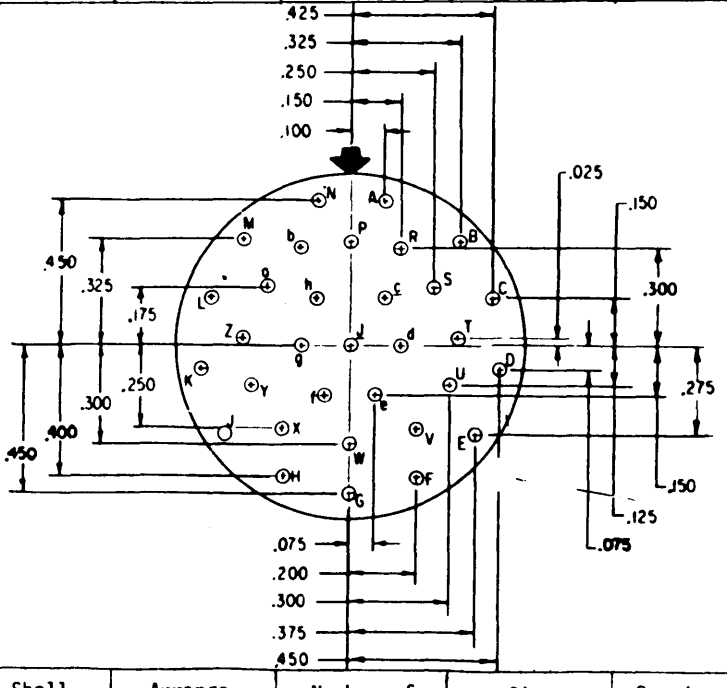

INCH	MM	INCH	MM
.025	.64	.175	4.45
.075	1.91	.200	5.08
.100	2.54	.250	6.35
.125	3.18	.275	6.99
.150	3.81	.300	7.62

INCH	MM
.325	8.26
.375	9.53
.400	10.16
.425	10.80
.450	11.43

Shell size	Arrange-ment No.	Number of contacts	Size contacts	Service rating	Contact location	Supersedes document
22	-32	32	20	I	All	MS27350-32

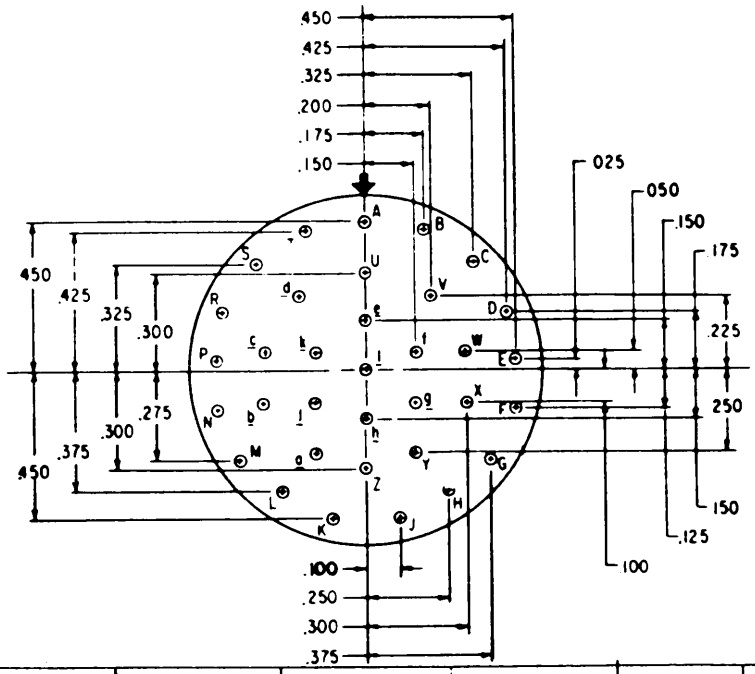

INCH	MM	INCH	MM
.025	.64	.175	4.45
.050	1.27	.200	5.08
.100	2.54	.225	5.72
.125	3.18	.250	6.35
.150	3.81	.275	6.99

INCH	MM
.300	7.62
.325	8.26
.375	9.53
.425	10.80
.450	11.43

Shell size	Arrange-ment No.	Number of contacts	Size contacts	Service rating	Contact location	Supersedes document
22	-34	34	20	I	All	MS27350-34

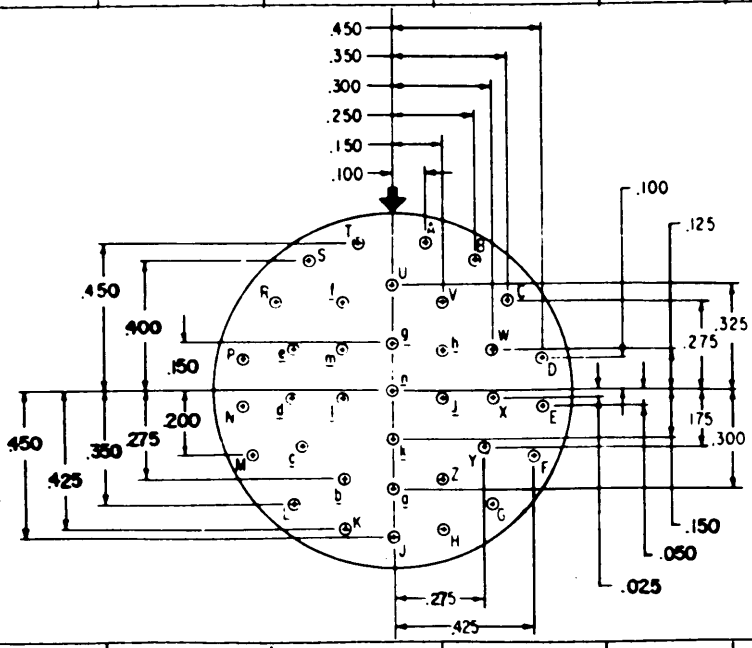

INCH	MM	INCH	MM
.025	.64	.175	4.45
.050	1.27	.200	5.08
.100	2.54	.250	6.35
.125	3.18	.275	6.99
.150	3.81	.300	7.62

INCH	MM
.325	8.26
.350	8.89
.400	10.16
.425	10.80
.450	11.43

Shell size	Arrange-ment No.	Number of contacts	Size contacts	Service rating	Contact location	Supersedes document
22	-36	36	20	I	All	MS27350-36

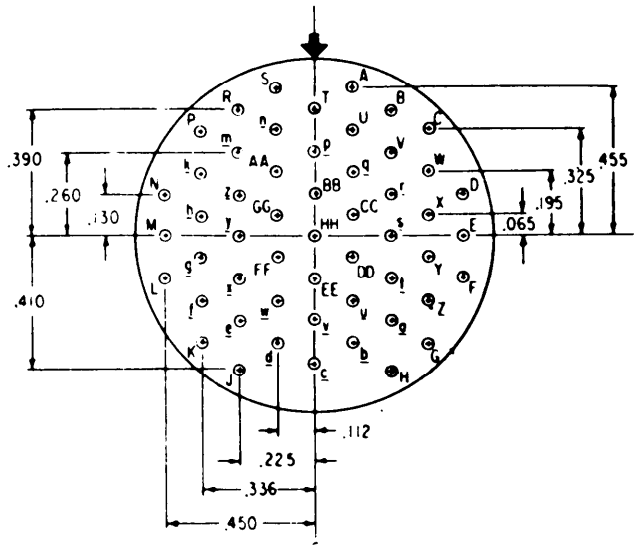

INCH	MM	INCH	MM
.065	1.65	.325	8.26
.112	2.84	.336	8.53
.130	3.30	.390	9.91
.195	4.95	.410	10.41
.225	5.72	.450	11.43
.260	6.60	.455	11.56

Shell size	Arrange-ment No.	Number of contacts	Size contacts	Service rating	Contact location	Supersedes document
22	-53	53	20	I	All	MS27350-53

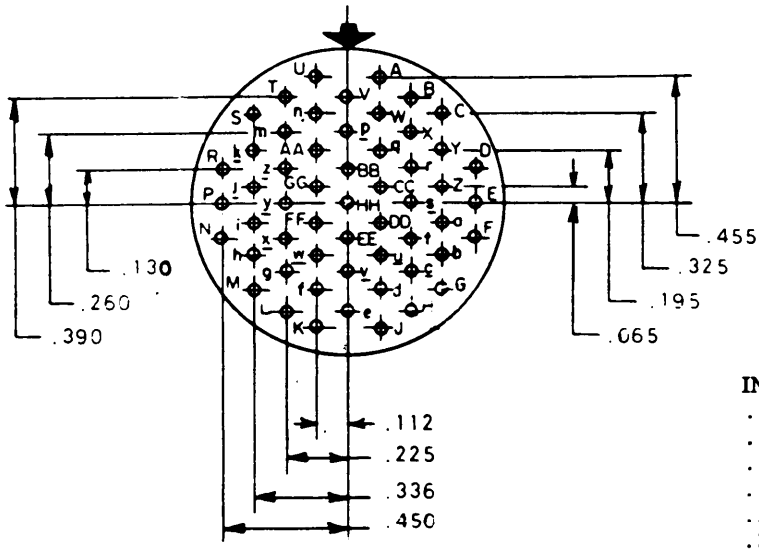

INCH	MM	INCH	MM
.065	1.65	.325	8.26
.112	2.84	.336	8.53
.130	3.30	.390	9.91
.195	4.95	.450	11.43
.225	5.72	.455	11.56
.260	6.60		

Shell size	Arrange-ment No.	Number of contacts	Size contacts	Service rating	Contact location	Supersedes document
22	-55	55	20	I	All	MS27350-55

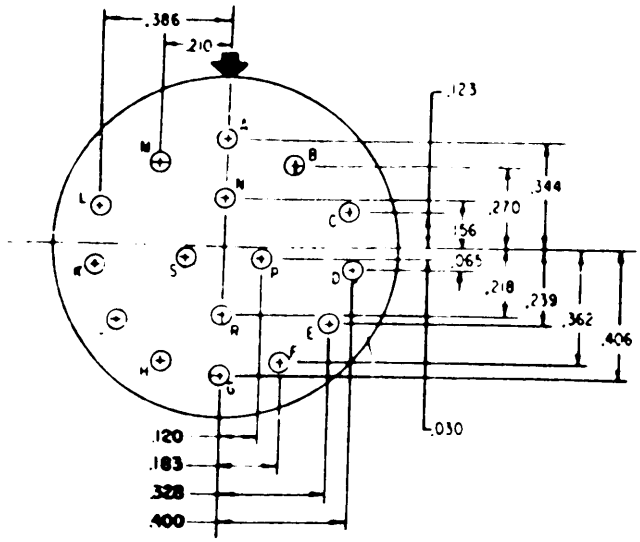

INCH	MM	INCH	MM
.030	.76	.210	5.33
.065	1.65	.218	5.54
.120	3.05	.239	6.07
.123	3.12	.270	6.86
.156	3.96	.328	8.33
.183	4.65	.344	8.74

INCH	MM
.362	9.19
.386	9.80
.400	10.16
.406	10.31

Shell size	Arrange-ment No.	Number of contacts	Size contacts	Service rating	Contact location	Supersedes document
22	-97	16	16	I	All	MS27350-97

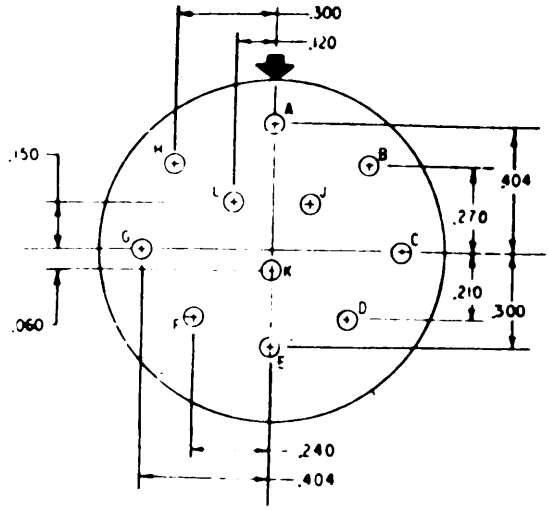

INCH	MM	INCH	MM
.060	1.52	.240	6.10
.120	3.05	.270	6.86
.150	3.81	.300	7.62
.210	5.33	.404	10.26

Shell size	Arrange-ment No.	Number of contacts	Size contacts	Service rating	Contact location	Supersedes document
22	-99	11	16	II	All	MS27350-99

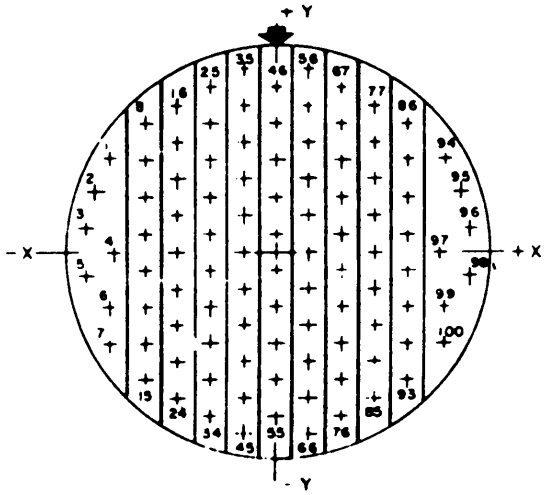

CONTACT HOLE LOCATION			CONTACT HOLE LOCATION			CONTACT HOLE LOCATION		
CONTACT NUMBER	LOCATION X AXIS	LOCATION Y AXIS	CONTACT NUMBER	LOCATION X AXIS	LOCATION Y AXIS	CONTACT NUMBER	LOCATION X AXIS	LOCATION Y AXIS
1	-.428	+.241	35	-.083	+.475	69	+.166	+.238
2	-.467	+.154	36		+.380	70		+.143
3	-.488	+.061	37		+.285	71		+.048
4	-.415	.000	38		+.190	72		-.047
5	-.488	-.061	39		+.095	73		-.142
6	-.428	-.142	40		.000	74		-.237
7	-.428	-.237	41		-.095	75		-.332
8	-.332	+.333	42		-.190	76		-.427
9		+.238	43		-.285	77	+.249	+.380
10		+.143	44		-.380	78		+.285
11		+.048	45		-.475	79		+.190
12		-.047	46	.000	+.428	80		+.095
13		-.142	47		+.333	81		.000
14		-.237	48		+.238	82		-.095
15		-.332	49		+.143	83		-.190
16	-.249	+.380	50		+.048	84		-.285
17		+.285	51		-.047	85		-.380
18		+.190	52		-.142	86	+.332	+.333
19		+.095	53		-.237	87		+.238
20		.000	54		-.332	88		+.143
21		-.095	55		-.427	89		+.048
22		-.190	56	+.083	+.475	90		-.047
23		-.285	57		+.380	91		-.142
24		-.380	58		+.285	92		-.237
25	-.166	+.428	59		+.190	93		-.332
26		+.333	60		+.095	94	+.428	+.241
27		+.238	61		.000	95	+.467	+.154
28		+.143	62		-.095	96	+.488	+.061
29		+.048	63		-.190	97	+.415	.000
30		-.047	64		-.285	98	+.488	-.061
31		-.142	65		-.380	99	+.428	-.142
32		-.237	66		-.475	100	+.428	-.237
33		-.332	67	+.166	+.428			
34		-.427	68	+.166	+.333			

INCH	MM
.047	1.19
.048	1.22
.061	1.55
.083	2.11
.095	2.41
.142	3.61
.143	3.63
.154	3.91
.166	4.22
.190	4.83
.237	6.02
.238	6.05
.241	6.12
.249	6.32
.285	7.24
.332	8.43
.333	8.46
.380	9.65
.415	10.54
.427	10.85
.428	10.87
.467	11.86
.475	12.07
.488	12.40

(Applicable to MIL-C-38999 only.)

Shell size	Arrangement No.	Number of contacts	Size contacts	Service rating	Contact location	Supersedes document
22	-35	100	22D	M	All	MS27523-35

SECTION 209

INSERT ARRANGEMENT, ELECTRICAL CONNECTOR

SHELL SIZE 24

CONTACT HOLE LOCATION			CONTACT HOLE LOCATION			CONTACT HOLE LOCATION		
CONTACT NUMBER	LOCATION X AXIS	LOCATION Y AXIS	CONTACT NUMBER	LOCATION X AXIS	LOCATION Y AXIS	CONTACT NUMBER	LOCATION X AXIS	LOCATION Y AXIS
1	-.479	+.279	46	-.166	-.427	91	+.166	-.332
2	-.520	+.190	47	-.166	-.522	92		-.427
3	-.546	+.095	48	-.083	+.475	93		-.522
4	-.555	.000	49		+.380	94	+.249	+.496
5	-.546	-.095	50		+.285	95		+.380
6	-.520	-.190	51		+.190	96		+.285
7	-.479	-.279	52		+.095	97		+.190
8	-.424	+.357	53		.000	98		+.095
9	-.415	+.190	54		-.095	99		.000
10		+.095	55		-.190	100		-.095
11		.000	56		-.285	101		-.190
12		-.095	57		-.380	102		-.285
13		-.190	58		-.475	103		-.380
14	-.424	-.357	59	.000	+.522	104		-.475
15	-.332	+.444	60		+.427	105	+.332	+.444
16		+.332	61		+.332	106		+.332
17		+.237	62		+.237	107		+.237
18		+.142	63		+.142	108		+.142
19		+.047	64		+.047	109		+.047
20		-.047	65		-.047	110		-.047
21		-.142	66		-.142	111		-.142
22		-.237	67		-.237	112		-.237
23		-.332	68		-.332	113		-.332
24		-.427	69		-.427	114		-.427
25	-.249	+.496	70		-.555	115	+.424	+.357
26		+.380	71	+.083	+.475	116	+.415	+.190
27		+.285	72		+.380	117		+.095
28		+.190	73		+.285	118		.000
29		+.095	74		+.190	119		-.095
30		.000	75		+.095	120		-.190
31		-.095	76		.000	121	+.424	-.357
32		-.190	77		-.095	122	+.479	+.279
33		-.285	78		-.190	123	+.520	+.190
34		-.380	79		-.285	124	+.546	+.095
35		-.475	80		-.380	125	+.555	.000
36	-.160	+.531	81		-.475	126	+.546	-.095
37	-.166	+.427	82	+.160	+.531	127	+.520	-.190
38		+.332	83	+.166	+.427	128	+.479	-.279
39		+.237	84		+.332			
40		+.142	85		+.237			
41		+.047	86		+.142			
42		-.047	87		+.047			
43		-.142	88		-.047			
44		-.237	89		-.142			
45		-.332	90		-.237			

INCHES	MM
.047	1.19
.083	2.11
.095	2.41
.142	3.61
.160	4.06
.166	4.22
.190	4.83
.237	6.02
.249	6.32
.279	7.09
.285	7.24
.332	8.43
.357	9.07
.380	9.65
.415	10.54
.424	10.77
.427	10.85
.444	11.28
.475	12.07
.479	12.17
.496	12.60
.520	13.21
.522	13.26
.531	13.49
.546	13.87
.555	14.10

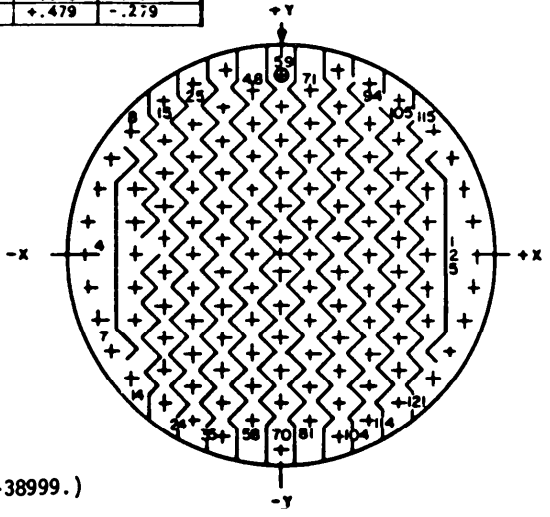

(Inactive for new design for MIL-C-38999.)

Shell size	Arrangement No.	Number of contacts	Size contacts	Service rating	Contact location	Supersedes document
24	-1	128	22M	M	All	MS27351-1

CONTACT LOCATION

CONTACT NUMBER	LOCATION X AXIS	LOCATION Y AXIS	CONTACT NUMBER	LOCATION X AXIS	LOCATION Y AXIS	CONTACT NUMBER	LOCATION X AXIS	LOCATION Y AXIS
1	-.553	+.039	35	-.154	-.105	69	+.154	-.210
2	-.550	-.068	36	-.154	-.210	70	+.154	-.315
3	-.459	+.253	37	-.154	-.315	71	+.154	-.420
4	-.523	+.175	38	-.154	-.420	72	+.154	-.525
5	-.459	+.092	39	-.154	-.525	73	+.255	+.437
6	-.459	-.014	40	-.053	+.502	74	+.255	+.352
7	-.459	-.122	41	-.053	+.397	75	+.255	+.247
8	-.509	-.215	42	-.053	+.292	76	+.255	+.142
9	-.459	-.307	43	-.053	+.187	77	+.255	+.037
10	-.354	+.420	44	-.053	+.082	78	+.255	-.068
11	-.354	+.315	45	-.053	-.023	79	+.255	-.173
12	-.354	+.210	46	-.053	-.128	80	+.255	-.278
13	-.354	+.105	47	-.053	-.233	81	+.255	-.383
14	-.354	.000	48	-.053	-.338	82	+.255	-.488
15	-.354	-.105	49	-.053	-.443	83	+.354	+.420
16	-.354	-.210	50	-.053	-.548	84	+.354	+.315
17	-.354	-.315	51	+.053	+.502	85	+.354	+.210
18	-.354	-.420	52	+.053	+.397	86	+.354	+.105
19	-.255	+.457	53	+.053	+.292	87	+.354	.000
20	-.255	+.352	54	+.053	+.187	88	+.354	-.105
21	-.255	+.247	55	+.053	+.082	89	+.354	-.210
22	-.255	+.142	56	+.053	-.023	90	+.354	-.315
23	-.255	+.037	57	+.053	-.128	91	+.354	-.420
24	-.255	-.068	58	+.053	-.233	92	+.459	+.253
25	-.255	-.173	59	+.053	-.338	93	+.523	+.175
26	-.255	-.278	60	+.053	-.443	94	+.459	+.092
27	-.255	-.383	61	+.053	-.548	95	+.459	-.014
28	-.255	-.488	62	+.154	+.525	96	+.459	-.122
29	-.154	+.525	63	+.154	+.420	97	+.509	-.215
30	-.154	+.420	64	+.154	+.315	98	+.459	-.307
31	-.154	+.315	65	+.154	+.210	99	+.550	+.039
32	-.154	+.210	66	+.154	+.105	100	+.550	-.068
33	-.154	+.105	67	+.154	.000			
34	-.154	.000	68	+.154	-.105			

INCHES	MM
.014	.36
.023	.58
.037	.94
.039	.99
.053	1.35
.068	1.73
.069	1.75
.082	2.08
.092	2.34
.105	2.67
.122	3.10
.128	3.20
.142	3.61
.154	3.91
.173	4.39
.175	4.45
.187	4.75
.210	5.33
.215	5.46
.233	5.92
.247	6.27
.253	6.43

INCHES	MM	INCHES	MM
.255	6.48	.443	11.25
.278	7.06	.457	11.61
.292	7.42	.459	11.66
.307	7.80	.488	12.40
.315	8.00	.502	12.75
.338	8.59	.509	12.93
.352	8.94	.523	13.28
.354	8.99	.525	13.34
.383	9.73	.548	13.92
.397	10.08	.550	13.97
.420	10.67		

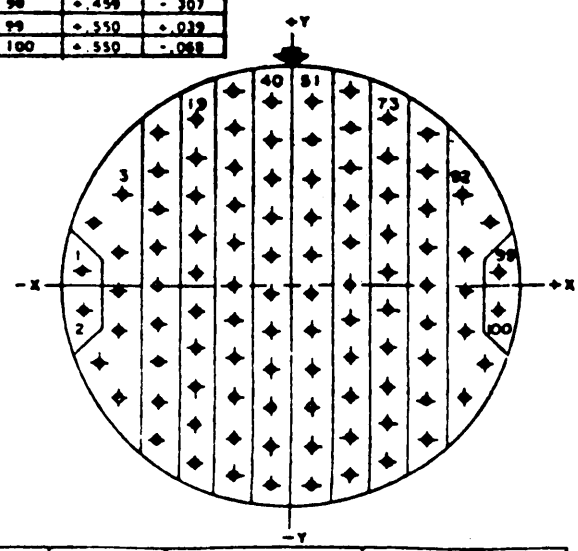

(Inactive for new design for MIL-C-38999.)

Shell size	Arrangement No.	Number of contacts	Size contacts	Service rating	Contact location	Supersedes document
24	-2	100	22	M	All	MS27351-2

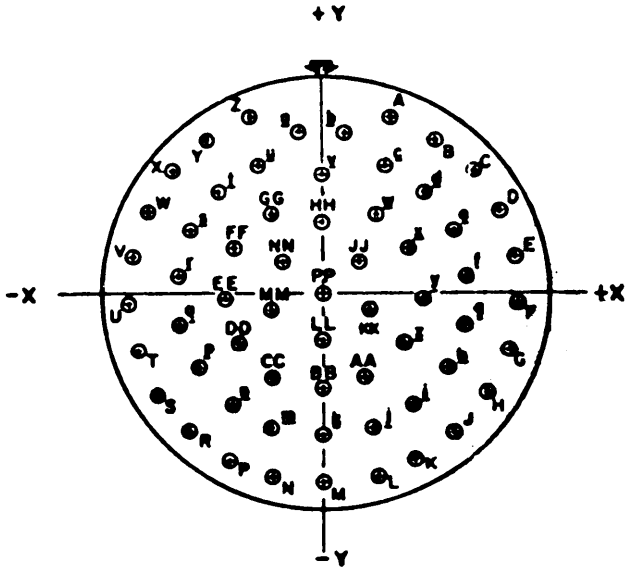

INCHES	MM	INCHES	MM
.010	.25	.251	6.38
.030	.76	.259	6.58
.041	1.04	.267	6.78
.046	1.17	.283	7.19
.068	1.73	.285	7.24
.088	2.24	.287	7.29
.094	2.39	.314	7.92
.101	2.57	.338	8.59
.105	2.67	.341	8.66
.122	3.10	.343	8.71
.131	3.33	.362	9.19
.132	3.35	.362	9.22
.133	3.38	.368	9.35
.134	3.40	.379	9.63
.135	3.43	.391	9.93
.139	3.53	.392	9.96
.147	3.73	.399	10.13
.164	4.17	.413	10.49
.173	4.39	.435	11.05
.175	4.45	.454	11.53
.196	4.98	.470	11.94
.200	5.08	.485	12.32
.213	5.41	.500	12.70
.223	5.66	.511	12.98
.228	5.79	.519	13.18
.230	5.84	.527	13.39
.233	5.92	.536	13.61
.237	6.02	.537	13.64

CONTACT LOCATION

CONTACT LETTER	LOCATION X AXIS	LOCATION Y AXIS	CONTACT LETTER	LOCATION X AXIS	LOCATION Y AXIS	CONTACT LETTER	LOCATION X AXIS	LOCATION Y AXIS
A	+.196	+.500	Y	-.314	+.435	V	.000	+.538
B	+.314	+.435	Z	-.196	+.500	W	+.147	+.223
C	+.413	+.343	a	-.068	+.454	t	+.237	+.122
D	+.485	+.230	b	+.068	+.454	y	+.267	-.010
E	+.527	+.101	c	+.173	+.363	x	+.228	-.139
F	+.536	-.030	d	+.285	+.283	AA	+.131	-.233
G	+.511	-.164	e	+.362	+.175	BB	.000	-.267
H	+.454	-.287	f	+.399	+.046	CC	-.131	-.233
J	+.368	-.391	g	+.392	-.088	DD	-.228	-.139
K	+.259	-.470	h	+.341	-.213	EE	-.267	-.010
L	+.134	-.519	i	+.251	-.314	FF	-.237	+.122
M	.000	-.537	j	+.133	-.379	GG	-.147	+.223
N	-.134	-.519	k	.000	-.402	HH	.000	+.200
P	-.259	-.470	m	-.133	-.379	JJ	+.105	+.094
R	-.368	-.391	n	-.251	-.314	KK	+.135	-.041
S	-.454	-.287	p	-.341	-.213	LL	.000	-.132
T	-.511	-.164	q	-.392	-.088	MM	-.135	-.041
U	-.536	-.030	r	-.399	+.046	NN	-.105	+.094
V	-.527	+.101	s	-.362	+.175	PP	.000	.000
W	-.485	+.230	t	-.285	+.283			
X	-.413	+.343	u	-.173	+.363			

Shell size	Arrangement No.	Number of contacts	Size contacts	Service rating	Contact location	Supersedes document
24	-61	61	20	I	All	MS27351-61

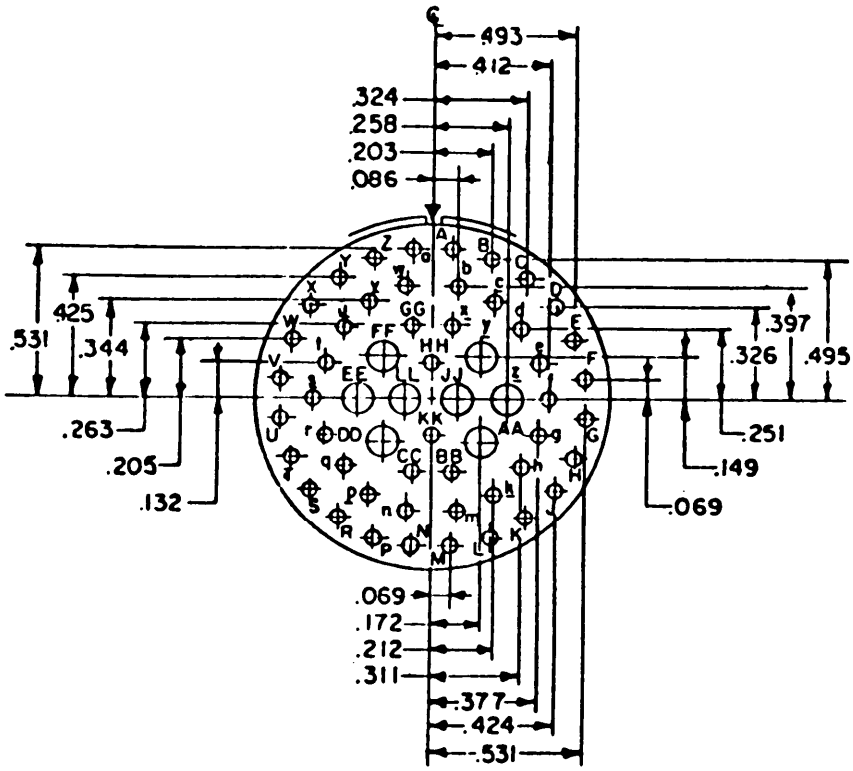

INCHES	MM	INCHES	MM	INCHES	MM
.069	1.75	.212	5.38	.377	9.58
.086	2.18	.251	6.38	.397	10.08
.132	3.35	.258	6.55	.412	10.46
.149	3.78	.263	6.68	.424	10.77
.172	4.37	.311	7.90	.425	10.80
.203	5.16	.324	8.23	.493	12.52
.205	5.21	.326	8.28	.495	12.57
		.344	8.74	.531	13.49

Shell size	Arrange-ment No.	Number of contacts	Size contacts	Service rating	Contact location	Supersedes document
24	-4	8	16	I	AA,DD,EE, FF,JJ,LL,y,z	MS27351-4
		48	20		All others	

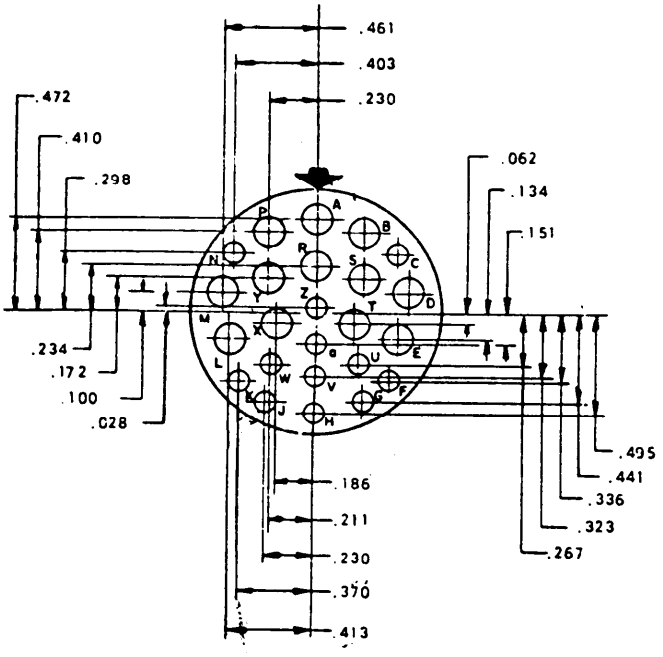

INCHES	MM	INCHES	MM
.028	.71	.298	7.57
.062	1.57	.323	8.20
.100	2.54	.336	8.53
.134	3.40	.370	9.40
.151	3.84	.403	10.24
.172	4.37	.410	10.41
.185	4.70	.413	10.49
.211	5.36	.441	11.20
.230	5.84	.461	11.71
.234	5.94	.472	11.99
.267	6.78	.495	12.57

Shell size	Arrangement No.	Number of contacts	Size contacts	Service rating	Contact location	Supersedes document
24	-24	12	12	I	A,B,D,E,L,M, P,R,S,T,X,Y	MS27351-24
		12	16		All others	

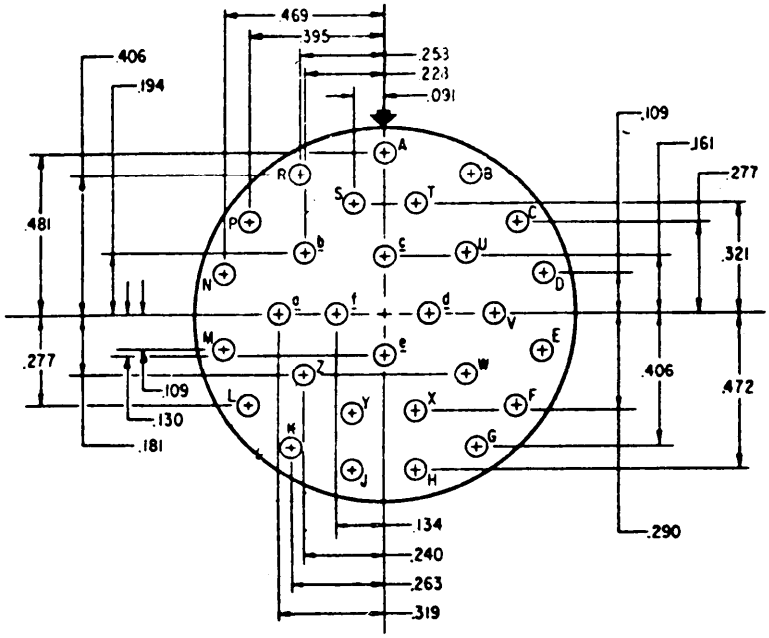

INCHES	MM	INCHES	MM
.091	2.31	.263	6.68
.109	2.77	.277	7.04
.130	3.30	.290	7.37
.134	3.40	.319	8.10
.161	4.09	.321	8.15
.181	4.60	.395	10.03
.194	4.93	.406	10.31
.228	5.79	.469	11.91
.240	6.10	.472	11.99
.258	6.55	.481	12.22

Shell size	Arrangement No.	Number of contacts	Size contacts	Service rating	Contact location	Supersedes document
24	-29	29	16	I	All	MS27351-29

CONTACT HOLE LOCATION			CONTACT HOLE LOCATION			CONTACT HOLE LOCATION		
CONTACT NUMBER	LOCATION X AXIS	LOCATION Y AXIS	CONTACT NUMBER	LOCATION X AXIS	LOCATION Y AXIS	CONTACT NUMBER	LOCATION X AXIS	LOCATION Y AXIS
1	-.479	+.279	46	-.166	-.427	91	+.166	-.332
2	-.520	+.190	47	-.166	-.522	92		-.427
3	-.546	+.095	48	-.083	+.475	93		-.522
4	-.555	.000	49		+.380	94	+.249	+.496
5	-.546	-.095	50		+.285	95		+.380
6	-.520	-.190	51		+.190	96		+.285
7	-.479	-.279	52		+.095	97		+.190
8	-.424	+.357	53		.000	98		+.095
9	-.415	+.190	54		-.095	99		.000
10		+.095	55		-.190	100		-.095
11		.000	56		-.285	101		-.190
12		-.095	57		-.380	102		-.285
13		-.190	58		-.475	103		-.380
14	-.424	-.357	59	.000	+.522	104		-.475
15	-.332	+.444	60		+.427	105	+.332	+.444
16		+.332	61		+.332	106		+.332
17		+.237	62		+.237	107		+.237
18		+.142	63		+.142	108		+.142
19		+.047	64		+.047	109		+.047
20		-.047	65		-.047	110		-.047
21		-.142	66		-.142	111		-.142
22		-.237	67		-.237	112		-.237
23		-.332	68		-.332	113		-.332
24		-.427	69		-.427	114		-.427
25	-.249	+.496	70		-.555	115	+.424	+.357
26		+.380	71	+.083	+.475	116	+.415	+.190
27		+.285	72		+.380	117		+.095
28		+.190	73		+.285	118		.000
29		+.095	74		+.190	119		-.095
30		.000	75		+.095	120		-.190
31		-.095	76		.000	121	+.424	-.357
32		-.190	77		-.095	122	+.479	+.279
33		-.285	78		-.190	123	+.520	+.190
34		-.380	79		-.285	124	+.546	+.095
35		-.475	80		-.380	125	+.555	.000
36	-.160	+.531	81		-.475	126	+.546	-.095
37	-.166	+.427	82	+.160	+.531	127	+.520	-.190
38		+.332	83	+.166	+.427	128	+.479	-.279
39		+.237	84		+.332			
40		+.142	85		+.237			
41		+.047	86		+.142			
42		-.047	87		+.047			
43		-.142	88		-.047			
44		-.237	89		-.142			
45		-.332	90		-.237			

INCHES	MM
.047	1.19
.083	2.11
.095	2.41
.142	3.61
.160	4.06
.166	4.22
.190	4.83
.237	6.02
.249	6.32
.279	7.09
.285	7.24
.332	8.43
.357	9.07
.380	9.65
.415	10.54
.424	10.77
.427	10.85
.444	11.28
.475	12.07
.479	12.17
.496	12.60
.520	13.21
.522	13.26
.531	13.49
.546	13.87
.555	14.10

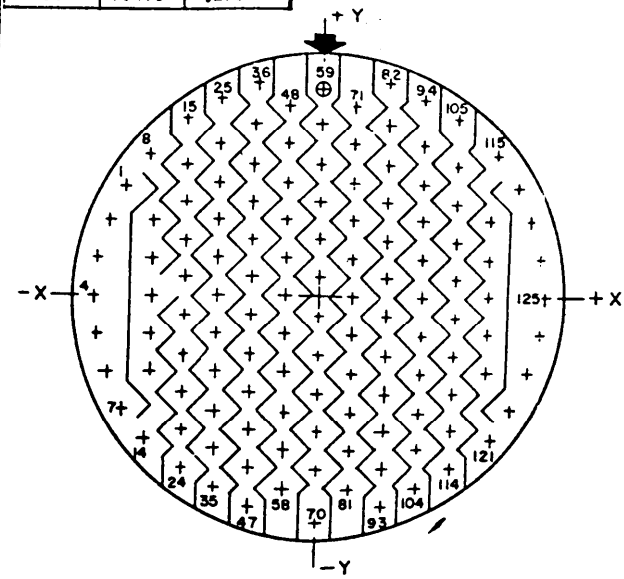

(Applicable to MIL-C-38999 only.)

Shell size	Arrangement No.	Number of contacts	Size contacts	Service rating	Contact location	Supersedes document
24	-35	128	22D	M	All	MS27524-35

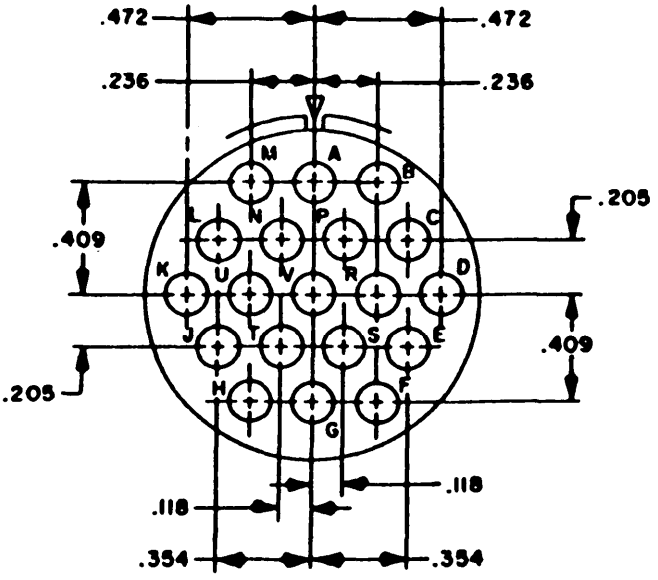

INCHES	MM
.118	3.00
.205	5.21
.236	5.99
.354	8.99
.409	10.39
.472	11.99

SHELL SIZE	ARRANGE-MENT NO.	NUMBER OF CONTACTS	SIZE CONTACTS	SERVICE RATING	CONTACT LOCATION
24	-19	19	12	I	All

STANDARDIZATION DOCUMENT IMPROVEMENT PROPOSAL

(See Instructions – Reverse Side)

1. DOCUMENT NUMBER

2. DOCUMENT TITLE

3a. NAME OF SUBMITTING ORGANIZATION

b. ADDRESS *(Street, City, State, ZIP Code)*

4. TYPE OF ORGANIZATION *(Mark one)*

- ☐ VENDOR
- ☐ USER
- ☐ MANUFACTURER
- ☐ OTHER *(Specify)*: _____

5. PROBLEM AREAS

a. Paragraph Number and Wording:

b. Recommended Wo-ding:

c. Reason/Rationale for Recommendation:

6. REMARKS

7a. NAME OF SUBMITTER *(Last, First, MI)* – Optional

b. WORK TELEPHONE NUMBER *(Include Area Code)* – Optional

c. MAILING ADDRESS *(Street, City, State, ZIP Code)* – Optional

8. DATE OF SUBMISSION *(YYMMDD)*

(TO DETACH THIS FORM, CUT ALONG THIS LINE.)

DD FORM 82 MAR 1426

PREVIOUS EDITION IS OBSOLETE.