METRIC

MIL-STD-I580B
7 January 2003
SUPERSEDING
MIL-STD-I580A(USAF)
22 December 1989

DEPARTMENT OF DEFENSE TEST METHOD STANDARD

DESTRUCTIVE PHYSICAL ANALYSIS FOR ELECTRONIC, ELECTROMAGNETIC, AND ELECTROMECHANICAL PARTS

AMSC N/A **FSC 59GP**

DISTRIBUTION STATEMENT A. Approved for public release; distribution is unlimited.

FOREWORD

1. This standard is approved for use by all Departments and Agencies of the Department of Defense.

2. To ensure the required high quality of parts used in the designs of space and launch vehicles, stringent in-process controls are imposed and a comprehensive test program is conducted on the completed parts. A key ingredient of the test program is the assessment of part lot quality based on the destructive examination of samples randomly selected from each production lot. The destructive physical analysis (DPA) is used to inspect and verify the internal design, materials, construction, and workmanship of the part. It can also be used to monitor processes, for failure analysis, or to suggest corrective actions. The information derived from the DPA may be used:

a. To preclude installation of parts having patent or latent defects;

b. To aid in dispositioning parts that exhibit anomalies;

c. To aid in defining improvement changes in design, materials, or processes;

d. To evaluate supplier production trends.

3. Beneficial comments (recommendations, additions, deletions) and any pertinent data which may be of use in improving this document should be addressed to: Defense Supply Center, Columbus, ATTN: DSCC-VAT, P.O. Box 3990, Columbus, OH 43216-5000, by using the Standardization Document Improvement Proposal (DD Form 1426) appearing at the end of this document or by letter.

CONTENTS

PARAGRAPH		PAGE
1.	SCOPE	1
1.1	Purpose	1
1.2	Application of the standard	1
2.	APPLICABLE DOCUMENTS	1
2.1	General	1
2.2	Government documents	1
2.2.1	Specifications, standards, and handbooks	1
2.2.2	Government documents, drawings, and publications	3
2.3	Non-Government publications	4
2.4	Order of precedence	4
3.	DEFINITIONS	4
3.1	Contracting officer	4
3.2	Defect	4
3.3	Destructive physical analysis	4
3.4	Lot-related defect	4
3.5	Production lot (electronic parts)	4
3.6	Screenable defect	4
3.7	Calibration	4
3.8	Acronyms	5
3.9	Recycled, recovered, or environmentally preferable materials	5
4.	GENERAL REQUIREMENTS	5
4.1	Sample size	5
4.1.1	DPA for a lot conformance test	5
4.1.1.1	DPA sample criteria	5
4.1.1.2	Parallel tests	5
4.1.1.3	Combined samples	5
4.1.1.4	Utilization of rejects	5
4.1.2	Resampling	5
4.2	DPA procedures	6
4.2.1	Baseline sketch	6
4.2.2	DPA data records	6
4.2.3	Test and inspection methods	6
4.2.3.1	External visual	6
4.2.4	Evaluation criteria	6
4.3	Radiography	8
4.4	Disassembly and sample preparation	8
4.4.1	Delidding	8
4.4.2	Sectioned samples	8
4.4.3	Scanning Electron Microscopy samples	8
4.5	Photographs/imagery	8
4.6	DPA residues/samples	8

PARAGRAPH PAGE

5. DETAILED REQUIREMENTS 10
5.1 Detailed requirements 10

6. NOTES 10
6.1 Intended use 10
6.2 Tailored application 10
6.3 Documentation 10
6.4 Subject term (key word) listing 10
6.5 Changes from the previous issue 10

FIGURE PAGE

4-1 Sample DPA summary sheet 7
4-2 Example of flat pack delidding vise 9

REQUIREMENT

10 Detailed requirements for capacitors.
11 Detailed requirements for connectors.
12 Detailed requirements for quartz crystals.
13 Detailed requirements for diodes.
14 Detailed requirements for feed-through filters.
15 Detailed requirements for magnetic devices (inductors, transformers, and coils).
16 Detailed requirements for microcircuits (monolithic, hybrid, optocoupler, and multichip module).
17 Detailed requirements for relays.
18 Detailed requirements for resistors.
19 Detailed requirements for switches.
20 Detailed requirements for thermistors.
21 Detailed requirements for transistors.
22 Detailed requirements for selected RF devices.
23 Detailed requirements for fuses.
24 Detailed requirements for heaters.

1. SCOPE

1.1 Scope. This standard describes the general requirements for performance of destructive physical analysis (DPA) on samples of parts. In addition to the requirements for the analysis procedures, the general criteria for interpreting results, such as for the acceptance or rejection of associated production lots, is included for typical electronic, electromagnetic, and electromechanical parts.

1.2 Application of the standard. This standard; is intended to be referenced, in detailed part specifications; or in other documents where DPA requirements are imposed, to assure that the practices, procedures, and criteria contained herein are uniformly applied. The requirements are intended to provide the general framework and basis for detailed DPA procedures for specific part types.

2. APPLICABLE DOCUMENTS

2.1 General. The documents listed in this section are specified in sections 3, 4, and 5 of this standard. This section does not include documents cited in other sections of this standard or recommended for additional information or as examples. While every effort has been made to ensure the completeness of this list, document users are cautioned that they must meet all specified requirements documents cited in sections 3, 4, and 5 of this standard, whether or not they are listed.

2.2 Government documents.

2.2.1 Specifications, standards, and handbooks. The following specifications, standards, and handbooks form a part of this document to the extent specified herein. Unless otherwise specified, the issues of these documents are those listed in the issue of the Department of Defense Index of Specifications and Standards (DoDISS) and supplement thereto, cited in the solicitation (see 6.2).

SPECIFICATIONS

DEPARTMENT OF DEFENSE

MIL-PRF-20	-	Capacitor, Fixed, Ceramic Dielectric (Temperature Compensating), Established Reliability and Non-Established Reliability, General Specification for.
MIL-PRF-27	-	Transformers and Inductors, (Audio, Power, and High-Power Pulse), General Specification for.
MIL-PRF-123	-	Capacitors, Fixed, Ceramic Dielectric (Temperature Stable and General Purpose), High Reliability, General Specification for.
MIL-PRF-3098	-	Crystals Units, Quartz, General Specification for.
MIL-PRF-6106	-	Relays, Electromagnetic, General Specification for.
MIL-PRF-14409	-	Capacitors, Variable (Piston Type, Tubular Trimmer), General Specification for.
MIL-PRF-15305		Coils, Fixed or Variable, Radio Frequency, General Specification for.
MIL-PRF-15160	-	Fuses, Instrument, Power, and Telephone, General Specification for.
MIL-PRF-15733	-	Filters and Capacitors, Radio Frequency Interference, General Specification for.
MIL-PRF-19500	-	Semiconductor Devices, General Specification for.
MIL-PRF-19978	-	Capacitors, Fixed, Plastic (or Paper-Plastic), Dielectric, (Hermetically Sealed in Metal, Ceramic, or Glass Cases) Established and Non-Established Reliability, General Specification for.
MIL-PRF-21038	-	Transformers, Pulse, Low Power, General Specification for.
MIL-PRF-23269	-	Capacitor, Fixed, Glass Dielectric, Established Reliability, General Specification for.
MIL-PRF-23648	-	Resistor, Thermal (Thermistor) Insulated, General Specification for.
MIL-PRF-24236	-	Switches, Thermostatic, (Metallic and Bimetallic), General Specification for.
MIL-H-28719	-	Header, Hermetically Sealed.
MIL-PRF-28861	-	Filters and Capacitors, Radio Frequency/Electromagnetic Interference Suppression, General Specification for.
MIL-PRF-38534	-	Hybrid Microcircuits, General Specification for.

MIL-PRF-38535	-	Integrated Circuits, (Microcircuits), Manufacturing, General Specification for.
MIL-DTL-38999	-	Connectors, Electrical, Circular, Miniature, High Density, Quick Disconnect (Bayonet, Threaded, and Breech Coupling), Environment Resistant, Removable Crimp and Hermetic Solder Contacts, General Specification for.
MIL-PRF-39001	-	Capacitors, Fixed, Mica Dielectric, Established Reliability and Non-Established Reliability, General Specification for.
MIL-PRF-39003	-	Capacitors, Fixed, Electrolytic (Solid Electrolyte), Tantalum, Established Reliability, General Specification for.
MIL-PRF-39005	-	Resistors, Fixed, Wire-Wound (Accurate), Non-Established Reliability, Established Reliability, General Specification for.
MIL-PRF-39006	-	Capacitor, Fixed, Electrolytic (Nonsolid Electrolyte), Tantalum, Establish Reliability, General Specification for.
MIL-PRF-39006/22	-	Capacitors, Fixed, Electrolytic (Nonsolid Electrolyte), Tantalum, (Polarized, Sintered Slug), 85 Deg. C (Voltage Derated to 125 Deg. C), Establish Reliability, Style CLR79.
MIL-PRF-39007	-	Resistors, Fixed, Wire-Wound (Power Type), Non-Established Reliability, Established Reliability, and Space Level, General Specification for.
MIL-PRF-39009	-	Resistors, Fixed, Wire-Wound (Power Type, Chassis Mounted), Non-Established Reliability, and Established Reliability, General Specification for.
MIL-PRF-39010	-	Coils, Radio Frequency, Fixed, Molded, Established Reliability, and Non-Established Reliability, General Specification for.
MIL-PRF-39012	-	Connectors, Coaxial, Radio Frequency, General Specification for.
MIL-PRF-39014	-	Capacitor, Fixed, Ceramic Dielectric (General Purpose), Established Reliability, and Non-Established Reliability, General Specification for.
MIL-PRF-39015	-	Resistors, Variable, Wire-Wound, (Lead Screw Actuated), Non-Established Reliability, and Established Reliability General Specification for.
MIL-PRF-39016	-	Relays, Electromagnetic, Established Reliability, General Specification for.
MIL-PRF-39017	-	Resistors, Fixed, Film (Insulated), Non-Established Reliability, and Established Reliability, General Specification for.
MIL-PRF-39035	-	Resistor, Variable, Nonwire-Wound, (Adjustment Type), Non-Established Reliability, and Established Reliability, General Specification for.
MIL-PRF-49470	-	Capacitor, Fixed, Ceramic Dielectric, Switch Mode Power Supply, Standard Reliability and High Reliability.
MIL-PRF-55182	-	Resistors, Fixed, Film, Non-Established Reliability, Established Reliability, and Space Level, General Specification for.
MIL-C-55302	-	Connectors, Printed Circuit Subassembly and Accessories.
MIL-PRF-55342	-	Resistors, Fixed, Film, Chip, Non-Established Reliability, Established Reliability, Space Level, General Specification for.
MIL-PRF-55365	-	Capacitor, Fixed, Electrolytic (Tantalem), Chip, Non-Established Reliability, Established Reliability, General Specification for.
MIL-PRF-55681	-	Capacitor, Chip, Multiple Layer, Fixed, Ceramic Dielectric, Established Reliability, Non-Established Reliability, General Specification for.
MIL-W-81044	-	Wire, Electric, Crosslinked Polyaklene, Crosslinked Aklane - Imide Polymer, or Polyarylene Insulated, Copper or Copper Alloy.
MIL-DTL-81381	-	Wire, Electric, Polyimide-Insulated, Copper or Copper Alloy.
MIL-PRF-83401	-	Resistor, Networks, Fixed, Film, and Capacitor-Resistor Networks, Ceramic Capacitor and Fixed Film Resistors, General Specification for.
MIL-PRF-83421	-	Capacitor, Fixed, Metallized, Plastic Film Dielectric, (DC, AC, or DC and AC), Hermetically Sealed in Metal or Ceramic Cases, Established Reliability, General Specification for.
MIL-PRF-83446		Coils, Radio Frequency, Chip, Fixed or Variable, General Specification for.
MIL-PRF-83500	-	Capacitors, Fixed, Electrolytic (NonSolid Electrolyte), Tantalum Cathode, General Specification for.

MIL-PRF-83500/1	-	Capacitors, Fixed, Electrolytic (NonSolid Electrolyte), Tantalum Anode and Cathode, Established Reliability, and Non-Established Reliability, Styles CRL01, CLR02, and CLR03.
MIL-PRF-83536	-	Relays, Electromagnetic, Established Reliability
MIL-PRF-87164	-	Capacitors, Fixed, Mica Dielectric, High Reliability, General Specification for.
MIL-PRF-87217	-	Capacitors, Fixed, Supermetallized Plastic Film Dielectric, Direct Current for Low Energy, High Impedance Applications, Hermetically Sealed in Metal Cases, High Reliability, General Specification for.

STANDARDS

FEDERAL

FED-STD-H28 - Screw-Thread Standards for Federal Services.

DEPARTMENT OF DEFENSE

MIL-STD-202	-	Test Methods for Electronic and Electrical Component Parts.
MIL-STD-750	-	Semiconductor Devices.
MIL-STD-883	-	Microcircuits.
MIL-STD-981	-	Design, Manufacturing and Quality Standards for Custom Electromagnetic Devices for Space Applications.
MIL-STD-1285	-	Marking of Electric and Electronic Parts.

(Unless otherwise indicated, copies of the above specifications, standards, and handbooks are available from the Document Automation and Production Service, Building 4D (DPM-DODSSP), 700 Robbins Avenue, Philadelphia, PA 19111-5094.)

2.2.2 Government documents, drawings, and publications. The following other Government documents, drawings, and publications form a part of this document to the extent specified herein. Unless otherwise specified, the issues are those cited in the solicitation.

NATIONAL INSTITUTE OF STANDARDS TECHNOLOGY (NIST)

NBS Special Publication 400-35 - Notes on SEM Examination of Microelectronic Devices.

(Application for copies should be addressed to National Institute of Standards Technology, 100 Bureau Drive, Stop 3460, Gaithersburg, MD 20899-3960.)

2.3 Non-Government publications. The following document(s) form a part of this document to the extent specified herein. Unless otherwise specified, the issues of the documents that are DoD adopted are those listed in the issue of the DoDISS cited in the solicitation. Unless otherwise specified, the issues of documents not listed in the DoDISS are the issues of the documents cited in the solicitation (see 6.2).

SOCIETY OF AUTOMOTIVE ENGINEERS, INC

SAE-AMS2644 - Inspection Materials, Penetrants

(Application for copies should be addressed to the Society of Automotive Engineers, Inc.; 400 Commonwealth Drive, Warrendale, PA 15096-0001.)

ELECTRONIC INDUSTRIES ALLIANCE (EIA)

EIA-469 - Standard Test Method for Destructive Physical Analysis (DPA) of Ceramic Monolithic Capacitors.

(Application for copies should be addressed to Electronic Industries Alliance, 2500 Wilson Boulevard, Arlington, VA 22201-3834.)

AMERICAN NATIONAL STANDARDS INSTITUTE (ANSI)

ANSI/NCSL Z540-1 - Calibration Laboratories and Measuring and Test Equipment – General Requirements.

(Applications for copies should be addresses to the American National Standards Institute (ANSI), 11 West 42nd Street, New York, NY 10036-8002.)

(Non-Government standards and other publications are normally available from the organizations that prepare or distribute the documents. These documents also may be available in or through libraries or other informational services.)

2.4 Order of precedence. In the event of a conflict between the text of this document and the references cited herein, the text of this document takes precedence. Nothing in this document, however, supersedes applicable laws and regulations unless a specific exemption has been obtained.

3. DEFINITIONS

3.1 Contracting officer. A contracting officer is a person with the authority to enter into, administer, or terminate contracts and make related determinations and findings. The term includes authorized representatives of the contracting officer acting within the limits of their authority as delegated by the contracting officer.

3.2 Defect. A defect is any nonconformance from specified requirements which affects form, fit, or function.

3.3 Destructive physical analysis (DPA). A DPA is a systematic, logical, detailed examination of parts during various stages of physical disassembly, conducted on a sample of completed parts from a given lot, wherein parts are examined for a wide variety of design, workmanship, and processing problems that may not show up during normal screening tests. The purpose of these analyses is to determine those lots of parts, delivered by a vendor, which have anomalies or defects such that they could, at some later date, cause a degradation or catastrophic failure of a system.

3.4 Lot-related defect. A lot-related defect is an anomaly attributable to a variance in the design, manufacturing, test, or inspection process that is repetitive throughout a production lot.

3.5 Production lot (electronic parts). A production lot is a group of parts defined by the part specification or drawing, and identified with a lot date code.

3.6 Screenable defect. A screenable defect is one for which an effective, nondestructive screening test or inspection can be reasonably developed and applied to eliminate with confidence the nonconforming items from the lot.

3.7 Calibration. Comparison of measurement standard or instrument of known accuracy with another standard, instrument or device to detect, correlate, report or eliminate by adjustment, any variation in the accuracy of the item being compared. Use of calibrated items provide the basis for value traceability of product technical specifications to national standard values. Calibration is an activity related to measurement and test equipment performed in accordance with ANSI/NCSL Z540-1 or equivalent.

3.8 Acronyms. The acronyms used in this standard are defined as follows.

CDRL	-	Contract Data Requirements List.
DPA	-	Destructive Physical Analysis.
EDS	-	Energy Dispersive Spectroscopy.
FA	-	Failure Analysis.
FIB	-	Focused Iron Beam.
IR	-	Insulation Resistance.
LCC	-	Leadless Chip Carrier.
LID	-	Leadless Inverted Device.
PIND	-	Particle Impact Noise Detection.
PMPCB	-	Parts Material and Processes Control Board.
RGA	-	Residual Gas Analysis.
SCD	-	Source Control Drawing.
SEM	-	Scanning Electron Microscope.

3.9 Recycled, recovered, or environmentally preferable materials. Recycled, recovered, or environmentally preferable materials should be used to the maximum extent possible provided that the material meets or exceeds the operational and maintenance requirements, and promotes economically advantageous life cycle costs.

4. GENERAL REQUIREMENTS

4.1 Sample size.

4.1.1 DPA for a lot conformance test. When a DPA is conducted to verify lot conformance, the minimum sample size shall be two (2) percent or five (5) units, whichever is greater, to a maximum of 30 units per Lot Date Code and Part Number combination. Further consideration should be made of increasing the sample size to random representative sampling for non-homogeneous lots, lots manufactured on non-QPL/QML lines, or lower quality level parts. In case of high cost parts, parts with very limited availability, or parts manufactured on a controlled QPL/QML product line the sample size may be reduced with the approval of Parts, Materiel, and Processes Control Board (PMPCB) or as defined by project or program requirements. The DPA shall be performed by an agency other than the manufacturer of the part.

4.1.1.1 DPA sample criteria. Units in the DPA sample may either be randomly selected or selected as most revealing based upon some characteristic known to be associated with certain problems for that part type.

4.1.1.2 Parallel tests. When a DPA is not conducted to verify lot conformance, but for some other reason, the various units in a DPA sample need not follow the same test sequence. Different tests may be performed on different units in a parallel test sequence to save time or to allow greater flexibility in test procedures. When a parallel test sequence is used for a particular part type, additional DPA units may be required above the maximum number specified to assure that all tests and inspections are completed.

4.1.1.3 Combined samples/stratified sampling. Combined or stratified DPA samples are acceptable for similar items manufactured using the same lots of materials, the same processes, and the same controls, if they have the same lot date code and vary only in some limited characteristics. The agency combining or stratifying samples must have current historical data/experience within the previous two years with the vendor and part types being combined in order to qualify for this option. Additionally, the approval of the PMPCB is also required.

4.1.1.4 Utilization of rejects. Electrical reject devices from a production lot may be used as DPA samples provided that the devices were only rejected due to out-of-tolerance parameters. These devices may consist of parts rejected during previous screening inspections. These devices must be approved by the PMPCB and should only be utilized when part availability is low or cost is high.

4.1.2 Resampling. If equipment failures, procedural errors, or other events independent of the parts themselves resulted in the initial DPA sample being inconclusive, a second DPA sample may be selected. However, the original samples shall be retained for review by appropriate agencies. The resample sample size may be determined on the basis of any partial results from the initial sample, and the type of defects that are being investigated.

4.2 DPA procedures. DPAs shall be conducted in accordance with documented procedures prepared for the specific part. The DPA procedures for a specific part shall be based on the requirements stated in this standard, the part procurement specification, and the configuration information for that part provided by the particular manufacturer. The critical test sequences and possible test branches to allow parallel testing shall be indicated in the procedures. All samples shall be serialized and all pre-DPA test data shall be recorded for reference at post-DPA evaluation. As a minimum, the procedure shall include applicable instructions for initial external inspections, electrical tests, radiography, disassembly, sample preparation, microscope or scanning electron microscope (SEM) examinations, and data recording. All DPA shall be done in an area that minimizes the risk of introduction of artifacts. The procedure shall contain a baseline drawing or sketch and, where practicable, a photograph of the part for comparison. The procedure shall indicate the pass-fail criteria applicable to that part type. The procedure shall include a checklist; generally similar to the example shown on figure 4-1 to be used in recording attributes data. All defects during DPA examination shall be photographed. The use of digital images is permitted. Electrical and variable data shall be recorded.

4.2.1 Baseline sketch. The general configuration of the devices to be examined are shown in the baseline sketches and drawings contained herein. These baseline sketches shall be used as a reference during the disassembly process. Typical drawings of baseline sketches are shown in requirements 10 through 24.

4.2.2 DPA data records. Each DPA shall be assigned a unique number for identification purposes. All markings on each part shall be recorded. Measurements shall be made and data recorded to substantiate the DPA findings in accordance with the applicable DPA procedures. Each data page and item shall reference the assigned DPA number. The DPA data records would typically include:

a. Outline of DPA procedure used.

b. The DPA summary sheet (figure 4-1).

c. The DPA test data sheets (figure 4-2 is an example for external visual).

d. Original x-rays, n-rays, and photographs, individually serialized and referenced, as required.

e. Other data or analysis results that support findings.

4.2.3 Test and inspection methods. Test and inspection methods shall be consistent with the requirements of the applicable part specification or drawing. When test and inspection methods other than those specified in the part specification or drawing are used, they shall be selected from or based on MIL-STD-202, MIL-STD-750, or MIL-STD-883, where applicable. Where test equipment is used to make quantitative measurements, the test equipment shall be maintained in accordance with ANSI Z540-1.

4.2.3.1 External visual. Record all markings on each part, check for configuration compliance, and inspect for any external defects that may affect reliability in accordance with the detailed requirements for each applicable section.

4.2.4 Evaluation criteria. Criteria for evaluation of DPA variables and attributes data shall be defined in the applicable DPA procedure for the particular part. The criteria shall be based on the requirements of the detailed part specification or drawing or on other applicable baseline documentation. Defects described on the DPA summary sheets shall reference the criteria used to establish the defects. Each rejectable defect shall be described and photographed for inclusion in the DPA report. The use of digital images is permitted. The resolution of anomalies shall also be annotated in the report.

DPA Summary Sheet

Part Type	Part Number	Lot/Date Code	Lot Size	Manufacturer
PO Number	DPA Number	DPA Sample Size	S.O. Number	
S/N DPA Samples				

Applicable Task	Quantity Tested	Quantity Failed	Failed ID No.	Technician	Date
○ External Visual	_____	_____	_____	_____	_____
○ Gross Leak	_____	_____	_____	_____	_____
○ Fine Leak	_____	_____	_____	_____	_____
○ PIND	_____	_____	_____	_____	_____
○ Internal Visual (Delidded)	_____	_____	_____	_____	_____
○ Internal Visual (Sectioned Devices)	_____	_____	_____	_____	_____
○ Bond Strength	_____	_____	_____	_____	_____
○ SEM	_____	_____	_____	_____	_____
○ Die Sheer	_____	_____	_____	_____	_____

Lot Disposition ○ Accepted ○ Rejected ○ Customer review

Parts Engineering Comment:

_____

_____

_____

_____

_____

FIGURE 4-1. Sample DPA summary sheet.

4.3 Radiography. X-ray examination shall be performed when required by the contract or dictated by device/package technology, before delidding to examine cavity devices and to determine internal clearances. It is also useful as an aid in locating delidding and sectioning cuts and to nondestructively investigate suspected defects. When x-ray radiographs are included as part of the DPA, suitable image quality indicators shall be used on each radiograph. Sections herein may require more specific radiographic examination.

4.4 Disassembly and sample preparation. Assure that all DPA requirements that cannot be satisfied after disassembly are satisfied prior to the start of disassembly, for example, measurements of entrapped water vapor or volatile contaminants within cavity devices. In all cases, care shall be exercised during disassembly and sample preparation to prevent damage that would introduce anomalies or the generation of contamination that would mask valid DPA data for the device being examined. The following requirements are applicable where appropriate.

4.4.1 Delidding. Delidding shall be as described in the detailed requirement section for the specific part type. An example of a delidding tool is shown on figure 4-2. In all instances, when opening devices for DPA, all reasonable precautions shall be taken to avoid introducing fluid or particulate contamination into the device or damaging its internal structure. All delidding shall be performed in a clean environment. During and after delidding all portions of a device shall be identifiable with the parent device. Samples that have been delidded shall be stored in a clean, moisture-free environment for further inspection.

4.4.2 Sectioned samples. Techniques similar to those used to prepare sectioned metallurgical and mineralogical specimens for optical examination are generally applicable to the preparation of DPA samples. The device to be examined is first potted in a suitable low shrinkage, room temperature resin. It is advisable to remove bubbles prior to curing. It is then cut or rough ground to the desired section plane, followed by fine grinding, polishing, and sometimes etching to bring out the necessary detail. The process by which samples are mounted, sectioned, and polished can readily induce high stresses in the materials. Such stresses can, and often do, result in damage which might be interpreted as product defects, but which never existed in the undisturbed specimen. This is particularly true for brittle materials with relatively low mechanical strength such as ceramic dielectric materials. As an aid to those involved in DPA, EIA-469 describes abnormalities resulting from faulty sample preparation for ceramic capacitors. This same information may be useful for other device types.

4.4.3 SEM samples. Transistor and integrated circuit chips shall be prepared for SEM examination in accordance with method 2077 of MIL-STD-750 or method 2018 of MIL-STD-883 as applicable and as modified herein. Additional guidelines are provided in NBS Special Publication 400-35. Other types of parts shall be prepared for SEM by using standard laboratory techniques for mounting and coating; taking care that anomalies are not introduced by the process.

4.5 Photographs/imagery. At the onset of any destructive physical Analysis (DPA), all typical part markings shall be recorded in an image prior to disassembly of the devices. Subsequently, a minimum of two recorded images are required to document the baseline characteristics of an opened device prior to performance of further destructive tests. These shall be supplemented with other recorded images or photographs as required to document all observed defects or anomalies. Microscopy techniques such as color, dark field, phase contrast, and interference contrasts shall be used as necessary to enhance image clarity. When SEM is performed to verify metallization step coverage integrity, an image of the worst-case oxide step and an image of the worst-case metallization shall be obtained. Additionally, where anomalous conditions are noted and SEM evaluation would assist in further delineation of the condition, it is required that the SEM be utilized for this purpose to record images of greater detail and information. Each image shall be labeled or otherwise identified with the applicable serial number, accelerating voltage, tilt, and the magnification used. Results of SEM energy dispersion spectroscopy (EDS) shall be supplied when appropriate.

4.6 DPA residues/samples. All residues shall be packaged, marked, and accompany the original DPA test report to the contractor for final approval and retention.

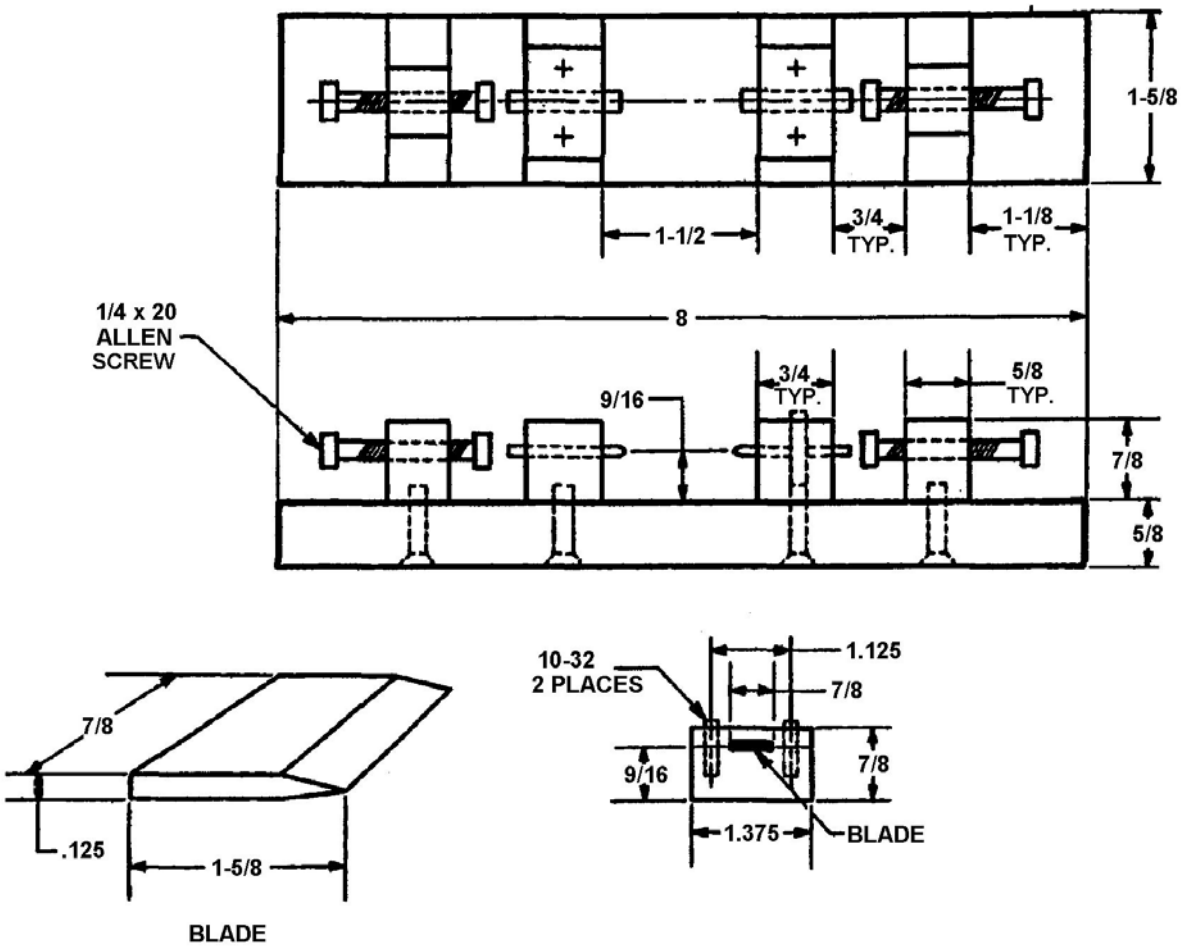

FIGURE 4-2. Example of flat pack delidding vise.

5. DETAILED REQUIREMENTS

5.1 Detailed requirements. The detailed requirements for components are covered in requirements 10 through 24.

6. NOTES

(This section contains information of a general or explanatory nature that may be helpful, but is not mandatory.)

6.1 Intended use. This standard is intended to be referenced, as applicable, in acquisition contracts involving the manufacture of parts or equipment to be used in space and launch vehicles. To ensure the required high quality of the parts, stringent in-process controls must be imposed and a comprehensive test program conducted on the completed parts. A key ingredient of the test program is the assessment of part lot quality based on the destructive examination of samples randomly selected from each production lot. This DPA is used to verify the internal design, materials, construction, and workmanship of the "as-built" sample parts to preclude installation of parts having patent or latent defects. DPA can also be used to monitor processes to evaluate supplier production trends and for failure analysis. DPA can also be used to derive information to aid in defining improvement changes in design, materials, or processes or to aid in dispositioning parts that exhibit anomalies.

6.2 Tailored application. The technical requirements in each contract should be tailored to the needs of that particular acquisition. Performance specifications and standards need not be applied in their entirety. Only the minimum requirements needed to provide the basis for achieving the program requirements should be imposed. The cost of imposing each requirement of this standard should be evaluated against the benefits that should be realized. However, the risks and potential costs of not imposing requirements must also be considered. The tailoring should be implemented by the wording used to state the applicable requirements in the specifications or in other contractual documents.

6.3 Documentation. Documents, forms, technical manuals, and data are prepared and distributed in accordance with the Contract Data Requirements List (CDRL) of the applicable contract. The data items discussed in this standard are not deliverable unless invoked by the CDRL or the applicable contract.

6.4 Subject term (key word) listing.

Analysis	Inductors
Capacitors	Inspections
Coils	Microcircuits
Connectors	Particles
Contacts	Physical
Crystals	Resistors
Decapsulation	Switches
Delid	Thermistors
Destructive	Transformers
Diodes	Transistors
Filters	

6.5 Changes from the previous issue. Marginal notations are not used in this revision to identify changes with respect to the previous issue due to the extensiveness of the changes.

Custodians:
Air Force - 19
DLA - CC
NASA - NA

Preparing activity:
DLA - CC

(Project 59GP-0172)

REQUIREMENT 10

DETAILED REQUIREMENTS FOR CAPACITORS

10. General. This section describes detailed requirements for a DPA of commonly used capacitors. These requirements supplement the general requirements in section 4. Examples of typical configuration sketches are included. Specification numbers are referenced to assist in identification. Pre-DPA tests, such as functional tests and solderability tests, are assumed to have been satisfied by normal inspection and testing and are therefore not addressed.

10.1 Capacitors, fixed ceramic (MIL-PRF-20, MIL-PRF-123, MIL-PRF-39014 and MIL-PRF-49470). A typical radial leaded device is shown on figure 10-1 and a typical axial leaded device is shown on figure 10-2.

10.1.1 Method.

10.1.1.1 External visual. Visually inspect each part for physical size and at 20X minimum magnification for cracks, pinholes, or chips in the case material. Inspect the leads for evidence of physical damage (cuts, nicks, crushing, or exposure of the base metal not allowed by the specification).

10.1.1.2 Terminal strength. Perform a lead pull strength test on all parts (two parts minimum) in accordance with the applicable specification.

10.1.1.3 Capacitor element visual after removal of encapsulation. Strip plastic coating or case from 50 percent (round down) of the encapsulated devices. Chemical solvents or plasma etch specified in EIA-469 are recommended. Examine capacitor element for cracks, chips, delaminations, and exposed electrodes at 50X minimum magnification. Please be careful to note if damage occurred due to the decapsulation procedure itself (i.e. lead separation, chipped edges, etc.). Verify the use of high temperature solder, SN10 or equivalent, through SEM EDS, differential thermal analysis, thermal galvanometric analysis, or other equivalent means of verification.

10.1.1.4 Sectioned sample preparation. Parts shall be cleaned, mounted, and polished in accordance with EIA-469.

10.1.1.5 Microscopic examination. The sectioned and polished samples shall be examined microscopically at 50X minimum magnification in accordance with EIA-469. The decapsulated samples shall be sectioned in the direction which will not display lead attachment. On those samples with the encapsulant intact, sectioning shall be performed in the plane which will display lead attachment. On the samples sectioned with the encapsulant intact, cracks in the coverplate ceramic may be introduced by the sectioning procedure. These will not be a cause for concern.

10.1.2 Data records. DPA findings that deviate from the specification configuration or other requirements shall be documented as defects. DPA findings shall be documented in a format equivalent to that given in EIA-469.

10.1.3 Evaluation criteria. When the DPA is being conducted as a lot conformance test, the associated production lot shall be rejected if one or more of the DPA samples does not meet any of the microscopic examination and the capacitor element visual requirements specified herein.

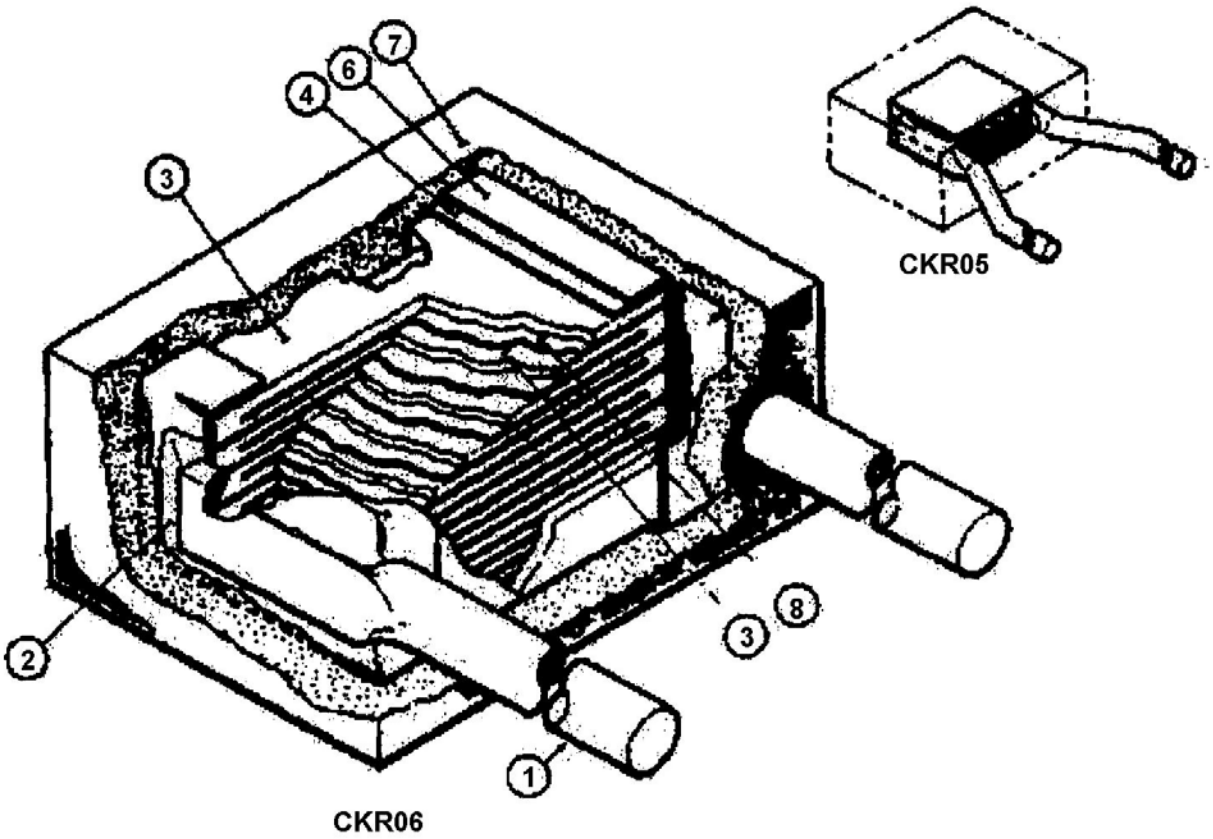

ITEM	ITEM NAME	MATERIALS OF CONSTRUCTION
1	Lead Wire	Gold-Plated Nickel or Solder-Coated Copper
2, 6	Solder	High-Temperature Alloy
3	Dielectric	Proprietary Ceramic Blend
4	End Termination	Silver (or It's Alloy)-Glass Frit Compound
7	Case	Encapsulating Media
8	Metal Electrode	Proprietary

FIGURE 10-1. Typical radial leaded ceramic capacitor molded case.

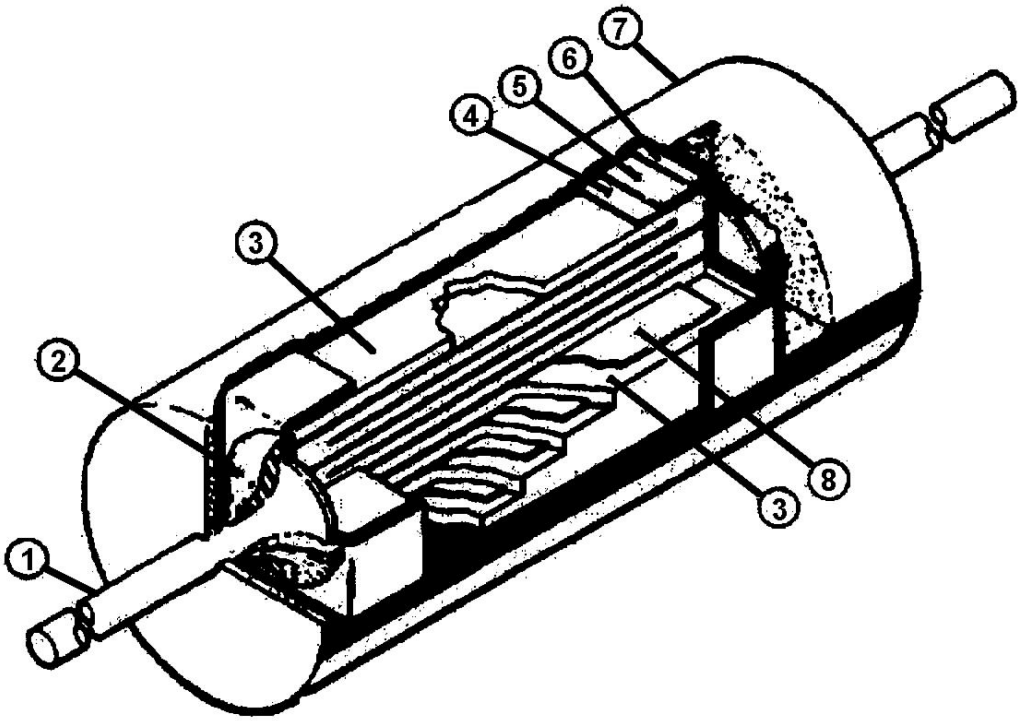

ITEM	ITEM NAME	MATERIALS OF CONSTRUCTION
1	Lead Wire	Gold-Plated Nickel or Solder-Coated Copper
2, 6	Solder	High-Temperature Alloy
3	Dielectric	Proprietary Ceramic Blend
4	End Termination	Silver (or It's Alloy)-Glass Frit Compound
5	Intermediate End Layer*	Electrodeposited Metal
7	Case	Encapsulating Media
8	Metal Electrode If used.	Proprietary

FIGURE 10-2. Typical axial leaded ceramic capacitor.

10.2 Capacitors, fixed, ceramic chip (MIL-PRF-123 and MIL-PRF-55681). The configuration of these capacitors is similar to the radial leaded capacitor illustrated on figure 10-1 except that they are not enclosed in plastic and do not have leads.

10.2.1 Method.

10.2.1.1 External visual. Visually inspect each part at 20X minimum magnification for chips, cracks, solder or metallization splatter or smear, exposed electrodes, end termination metallization configuration, warpage, and physical dimensions. It is recommended that parts also be examined with a fluorescent penetrant that meets the requirements of SAE-AMS2644, for fine cracks and other surface defects not resolvable at 50X magnification. A suitable part-cleaning procedure must also be developed and used with any penetrant examination to ensure that a harmful residue is not left on part surfaces.

10.2.1.2 Sample preparation. Parts shall be cleaned, oriented, mounted, and polished in accordance with EIA-469.

10.2.1.3 Microscopic examination. The sectioned and polished samples shall be examined microscopically at 50X minimum magnification in accordance with EIA-469.

10.2.2 Data records. DPA findings that deviate from the specified configuration or other requirements shall be documented as defects on a form similar to that given in EIA-469.

10.2.3 Evaluation criteria. When the DPA is being conducted as a lot conformance test, the associated production lot shall be rejected if one or more of the DPA samples does not meet any of the microscopic examination requirements specified herein.

10.3 Capacitor, fixed mica (MIL-PRF-87164 and MIL-PRF-39001). A typical fixed mica capacitor is illustrated on figure 10-3. MIL-PRF-87164 capacitors have soldered foil-to-clamp connections.

10.3.1 Method.

10.3.1.1 External visual. Visually inspect each part at 20X minimum magnification in accordance with applicable procurement specification to examine leads, markings, dimensions, and case.

10.3.1.2 Terminal strength. Conduct terminal strength test (pull test only) on all samples in accordance with the applicable specification.

10.3.1.3 Chemical removal of encapsulation. Chemically strip the encapsulation from one-half of the samples.

10.3.1.4 Capacitor element visual. Examine decapsulated samples at 20X minimum magnification for configuration compliance, uniformity of stacking, lead attachment, clamp, solder coverage, and cracked or cold solder connections. Disassemble units to permit evaluation of stacking workmanship, intrusion of impregnant into clamp area, and cracks on the mica plates.

10.3.1.5 Sectioned sample preparation. Cast remaining half of samples in clear epoxy and cross section in a plane perpendicular to the lead plane to permit evaluation of the dielectric stacking, lead-to-clamp or foil-to-clamp connections, and the degree of impregnant intrusion.

10.3.2 Data records. DPA findings that deviate from the specified configuration or other requirements shall be documented as defects.

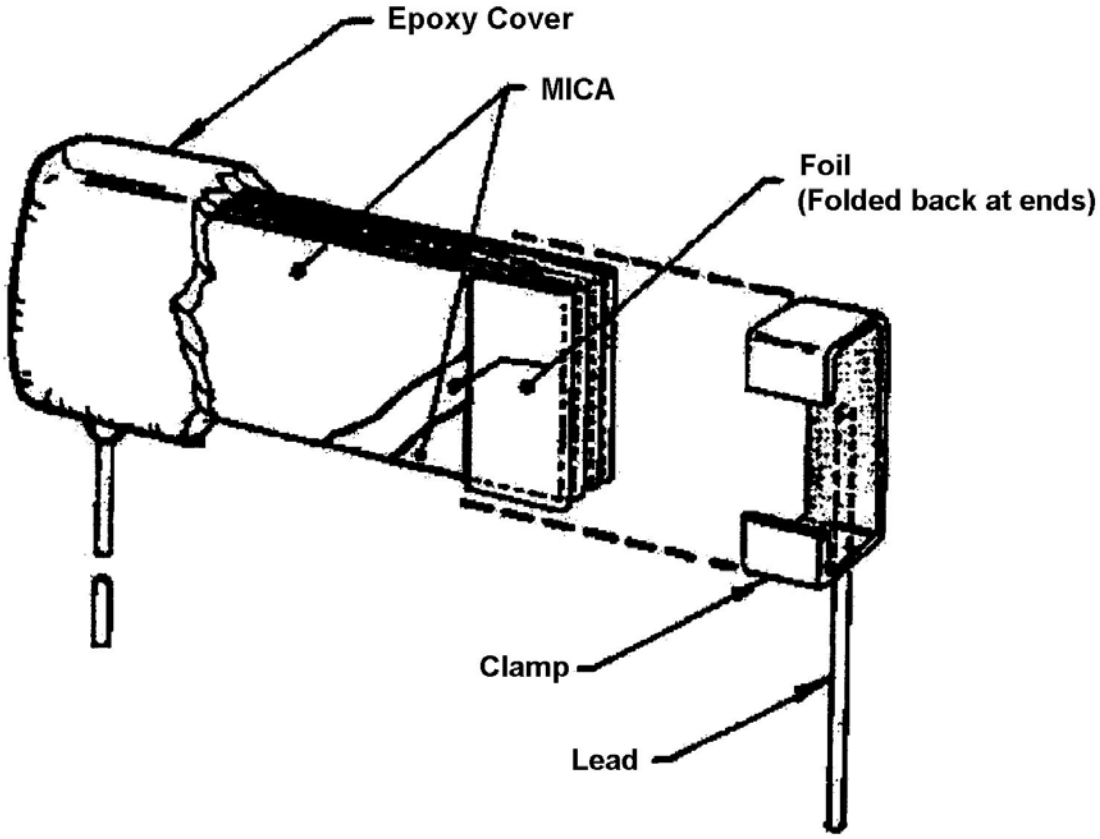

FIGURE 10-3. Typical mica capacitor (CMR style).

10.3.3 Evaluation criteria. With mica capacitors, particular attention should be given to ascertaining that the devices are solidly and uniformly constructed and that the end clamps make good metallurgical contact with the electrode foils. Microscopic examination shall be performed at 20X minimum magnification. When the DPA is being conducted as a lot conformance test, the associated production lot shall be rejected if one or more of the DPA sample parts exhibit any of the following defects:

a. Failure to meet external visual requirements or configuration requirements.

b. Excessive voids, thin spots, or cracks in the dielectric.

c. Inadequate stack clamping.

d. Excessive intrusion of impregnant into the foil/ clamp interface.

e. Cracks in the case or encapsulating plastic extending through to the capacitor element.

f. Inadequate lead to clamp attachment.

g. Solder used is not a high-temperature alloy. Verify this through SEM EDS, differential thermal analysis, thermal galvanometric analysis, or other equivalent methods.

h. Inadequate solder between foil and clamp and between clamp and lead, when applicable.

i. Failure to pass lead pull tests.

j. Any defect that reduces part reliability.

10.4 Capacitor, fixed, solid tantalum (MIL-PRF-39003). A typical solid tantalum capacitor is illustrated on figure 10-4.

10.4.1 Method.

10.4.1.1 External visual. Examine seal area at a minimum of 20X magnification for defects in the glass seal or tubulet-to-ead solder joint, pinholes or cracks in plastic sleeving, and marking and configuration compliance.

10.4.1.2 Hermeticity. Conduct seal tests on all samples of hermetically-sealed styles in accordance with the requirements of the procurement specification. Sleeving should be removed prior to conducting this test.

10.4.1.3 Sectioned samples. One half of samples (round up) shall be potted in clear plastic sectioned axially to a depth that exposes the anode lead in the header tubulet. Caution should be exercised to ensure cracks are not induced during sectioning. Examine using 30X minimum magnification for configuration compliance, and for defects in lead bond, tubulet solder, slug orientation, and slug-to-case solder joint.

10.4.1.4 Delidded samples. Open remaining half of samples by cutting and peeling the metal can in such a way that the cavity above the tantalum slug can be observed. Examine for loose solder particles, configuration compliance, slug orientation, slug-to- case attachment, and adequate anode riser-to-lead weld joint. Unless otherwise specified, the capacitors shall meet the requirements of MIL-PRF-39003, for acceptable parts and major/minor defects as specified in the radiographic inspection criteria.

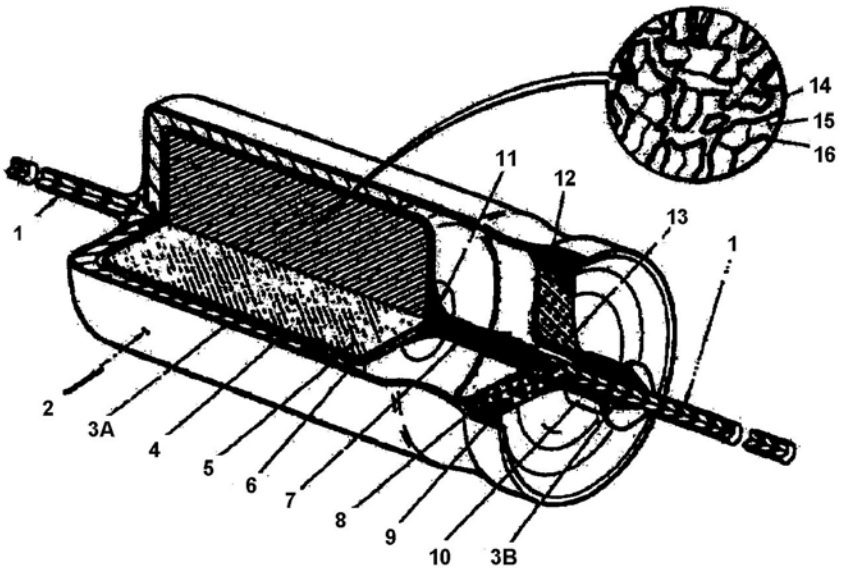

ITEM	ITEM NAME	MATERIAL OF CONSTRUCTION
1	External leads	Solder-Coated Nickel
2	Case	Solder-Plated Brass
3A	Solder	Low-Temperature Alloy
3B	Solder	High-Temperature Alloy
4	Conductive Paint	Silver-based
5	Slug	See Item No. 14, 15, 16
6	Carbon film	Colloidal Carbon
7	Anode Riser	Tantalum Wire
8, 9, 10	Seal Assembly	Glass-To-Metal Seal
11	Anode riser wire to slug interface (may be a weld at the surface or the wire may be buried in the slug)	
12	Case crimp	
13	Anode riser-to-lead Lap weld	
14	Oxide coating	
15	Core	
16	Dielectric film	

FIGURE 10-4. Typical solid tantalum capacitor.

10.4.2 Data records. DPA findings that deviate from the specified configuration or other requirements shall be documented as defects.

10.4.3 Evaluation criteria. When the DPA is being conducted as a lot conformance test, the associated production lot shall be rejected if one or more of the DPA sample parts exhibit any of the following defects:

a. Cracks extending through the glass header. NOTE: Care must be taken to avoid inducing cracks during sectioning. Minor chips or flaking at the tip of the glass meniscus shall not be considered an anomaly.

b. Tubulet filled with solder less than 25 percent of its length when solder-coated leads are used and less than 50 percent of its length when gold-plated leads are used. Voids in tubulet solder or solder separation from lead or tubulet that reduces the fill to less than 25 percent of tubulet height for solder-coated leads or to less than 50 percent for gold-plated leads.

c. Voids in header to case solder attach which exceed 50 percent of the header thickness.

d. Anode (tantalum slug) not parallel to case within 15 degrees.

e. Solder spikes inside unit or eyelet solder extending beyond bottom of tubulet.

f. Broken or cracked anode lead weld.

g. Anode immersed in solder that is less than one-third of its height (see radiographic inspection criteria of MIL-PRF-39003).

h. Anchor solder cracked or pulled away from anode slug, except as noted in the radiographic inspection criteria of MIL-PRF-39003.

i. Solder buildup on inside of can with height greater than 0.50 mm (.020 inches) resulting from solder rundown during sealing process.

j. Anode totally immersed in solder.

k. Anode broken, cracked, or distorted.

l. Loose material 0.25 mm (.010 inches) or large enough to bridge the shortest distance between lead and can, or between tantalum pellet and can.

m. Seal leakage in excess of specification requirements.

n. Any defect that reduces part reliability (e.g., bulge or dents on the case).

o. Failure to meet external visual requirements:

    (1) Cracks on the glass seal.

    (2) Cracked or cold solder joint around seal area.

    (3) Flux or foreign material on anode lead and around seal area.

10.5. Capacitor, fixed, tantalum foil (MIL-PRF-39006). A typical tantalum foil capacitor is illustrated on figure 10-5.

NOTE: Obsolete part, no longer in production.

10.5.1 Method.

10.5.1.1 External visual. Perform external visual inspection at a minimum of 20X magnification. Check condition of glass seal and the nickel-to-tantalum lead weld. Check for physical damage to weld area that could be evidence of bending leads too sharply in the critical weld zone.

10.5.1.2 Hermeticity. Conduct seal tests on each sample in accordance with the requirements of the procurement specification. Remove sleeving before conducting the tests.

10.5.1.3 Removal of encapsulation. Remove cases to permit internal visual inspection at 30X minimum magnification. Two methods have proven satisfactory. Circumferential cuts (one at each end) followed by two longitudinal cuts allows the case to be removed in two pieces. The other method uses a lathe or grinder to cut away the circumferential weld to the header at each end of the part. After de-burring, it is often possible to slide the capacitor core intact out of the case. If not, it may be necessary to make a longitudinal cut and spring the case slightly to release the core. After examination of the core, the capacitor element shall be unwrapped for examination of the lead-to-foil welds and the foils. Inspect for configuration compliance during each step.

10.5.2 Data records. DPA findings that deviate from the specified configuration or other requirements shall be documented as defects.

10.5.3 Evaluation criteria. When the DPA is being conducted as a lot conformance test, the associated production lot shall be rejected if the DPA sample parts exhibit any of the following defects:

a. Cracks, chips, or breaks extending through the end seal. Broken or incompletely welded end seals. Minor chips or flaking at the tip of the glass meniscus shall not be considered an anomaly.

b. Cracks or breaks in lead weld joints, or greater than 30-percent misalignment of butt welds.

c. Anode lead uninsulated and positioned such that it can touch case or cathode lead during shock or vibration.

d. Unanchored elements or insufficient impregnant or filler to prevent movement of elements.

e. Absence of spacer material between foils, or unwetted spacer material.

f. Anode foil color not uniform or not indicative of the dc voltage rating of the capacitor.

g. Less than three weld spots, cracked welds on lead-to-foil connection, or lead broken away from foil.

h. Scratches or cracks in leads or foil which penetrate the dielectric.

i. Contamination or foreign material inside capacitor.

j. Abnormal telescoping of the capacitor element.

k. Seal leakage in excess of specification requirements.

l. Any other defect that reduces part reliability.

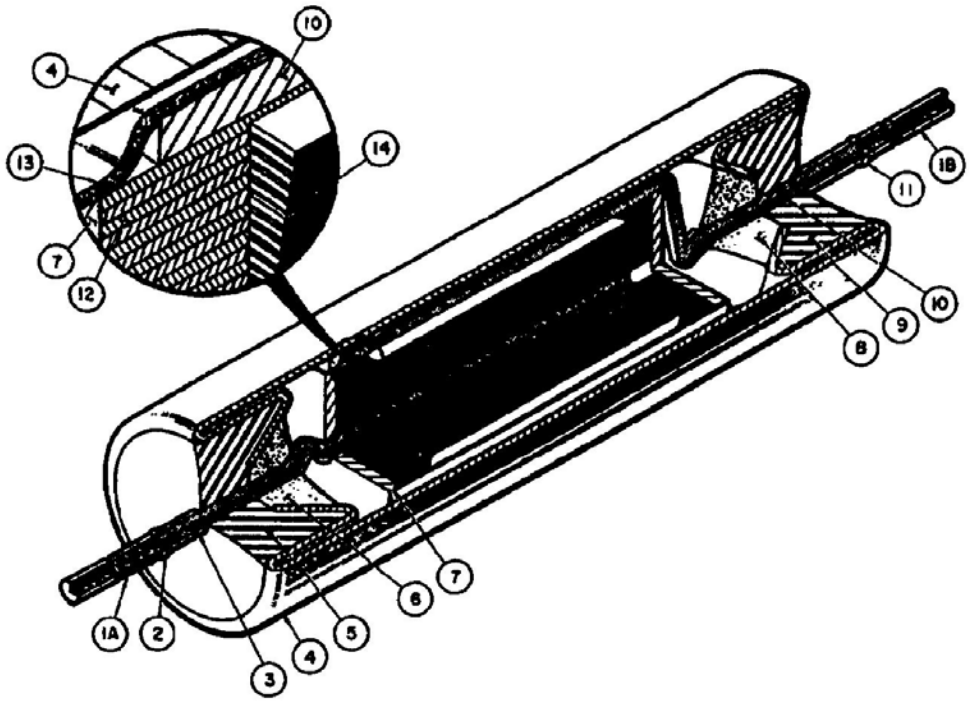

ITEM	ITEM NAME	MATERIAL OF CONSTRUCTION
1A, 1B	Nickel Lead	Nickel (MIL-STD-1276, Type N)
2, 11	Butt Weld	
3, 10	Tantalum Lead	99.9 percent Tantalum
4	Tantalum Case	99.9 percent Tantalum
5, 9	Seal Assembly	Glass-To-Metal Seal
6, 8	Header Ring	99.9 percent Tantalum
7	End Insulation	Elastomeric Material
12	Dielectric	Tantalum Pentoxide
13	Insulating Tape	Polyester Film
14	Electrode	Tantalum Foil (May be etched)

FIGURE 10-5. Typical tantalum foil capacitor.

10.6 Capacitor, fixed, paper or plastic film (MIL-PRF-19978). A typical paper or plastic film capacitor is illustrated on figure 10-6.

10.6.1 Method.

10.6.1.1 External visual. Conduct visual inspection, at 20X minimum magnification, for defects in case seal, eyelet solder, glass headers, leads, and markings.

10.6.1.2 Hermeticity. Conduct seal tests on each sample of hermetically-sealed parts in accordance with the requirements of the procurement specification. These tests are not required if they have previously been conducted as part of receiving inspection.

10.6.1.3 Sample preparation. Remove case from all samples by making two circumferential cuts just inside each header plus longitudinal cut to permit removal. Carefully remove cutting debris before opening case. Section headers, after completing visual inspection, through eyelet longitudinal center line to verify eyelet solder integrity.

a. Internal visual. Examine the parts at a minimum of 30X magnification for configuration compliance and for tubulet solder fill, contamination, insulation, spacers, impregnation, element stability, and lead spiral to end spray solder connection. Note that this connection is critical and should be subjected to a pull test to ensure that it is not a cold solder or "low strength" joint. All lead to end spray terminations shall be pull tested to the following criteria:

   (1) Case diameter up to 17.01 mm (.670 inch); minimum pull force- 4 pounds.

   (2) Case diameter 17.04 mm (.671 inch) and up- minimum pull force- 6 Pounds.

If necessary, remove the encapsulation from the capacitor element. Unwrap the capacitor element of all samples to examine foil and dielectric condition.

10.6.2 Data records. DPA findings that deviate from the specified configuration or other requirements shall be documented as defects.

10.6.3 Evaluation criteria. When the DPA is being conducted as a lot conformance test, the associated production lot shall be rejected if the one or more DPA sample parts exhibit any of the defects listed below. Note that the defects in this list are based on the typical part shown on figure 10-6. Defect criteria should be adjusted as applicable for other designs.

a. Cracked or broken glass in end seal.

b. Solder rundown inside case in area of rolled-foil or end spray.

c. Loose (or moveable) element due to insufficient impregnant or inadequate restraint. When impregnant is not used, other physical restraints may be provided to restrict element movement. The DPA shall be conducted so that the existence and suitability of these restraints are verified. When impregnant is used to stabilize the element, it must be free of voids that would permit the element to move during shock or vibration.

d. Absence of insulator caps over end of element.

e. Loose lead wire or broken solder where lead attaches to the extended foil end spray.

f. Broken or damaged lead wire (internal or external).

g. Contamination and foreign material embedded between windings of the capacitor element.

h. Burned or charred regions in the capacitor element area which damage the dielectric.

i. Less than 25-percent eyelet solder fill (from outer end of eyelet).

j. Eyelet solder separation from lead or inside diameter of eyelet.

k. Voids or holes through the outer end seal.

l. Scratches or cracks in the foil which penetrate the dielectric.

m. Folds, blisters, or wrinkles in the dielectric winding.

n. End spray coverage that does not provide at least 75% area contact to all winding turns.

o. Poor adhesion between end spray and foil, or between end spray and external lead connection.

p. Seal leakage in excess of specification requirements.

q. Any other defect that reduces part reliability.

10.7 Capacitor, fixed, metallized film (MIL-PRF-87217 and MIL-PRF-83421). A metallized film capacitor is shown on figure 10-7. The part in this illustration has the conventional lead attached to the element end spray. Parts may also utilize other means, e.g., a wire braid or several flexible leads to make this connection.

10.7.1 Method.

10.7.1.1 External visual. Conduct visual examination, at 20X minimum magnification, for defects in case seal, eyelet solder, glass headers, leads, and marking.

10.7.1.2 Hermeticity. Conduct seal tests on each sample in accordance with the requirements of the procurement specification. These tests are not required if seal tests have already been conducted as a part of receiving inspection.

10.7.1.3 Sample preparation. Remove case from all samples by making two circumferential cuts just inside each header plus a longitudinal cut to permit removal. After internal visual has been completed (10.7.1.4), section each header through the eyelet, pinhole, or other longitudinal center line to verify tubulet integrity.

10.7.1.4 Internal visual. Examine the parts at a minimum of 30X magnification for configuration compliance and for external plastic wraps, tubulet solder fill, contamination, solder splatter, insulation spacers and washers, impregnation, element stability, and lead-to-end spray termination (babbitt) integrity. Note that the lead-to-end spray termination is critical and should be pull tested to ensure that it is not a cold solder or "low strength" joint. Lead attachment configurations for this part type are manufacturer and case size specific so providing pull test limits is impractical, instead, the leads should be axially pulled to destruction and examined for evidence of end spray removal with the wire, which should not be less than 50 percent of the intended attachment area. Unwrap the metallized plastic of all samples and examine them for workmanship defects such as wrinkled film, evidence of charring, nonuniformity of film conductor end margin, pinholes, or other defects.

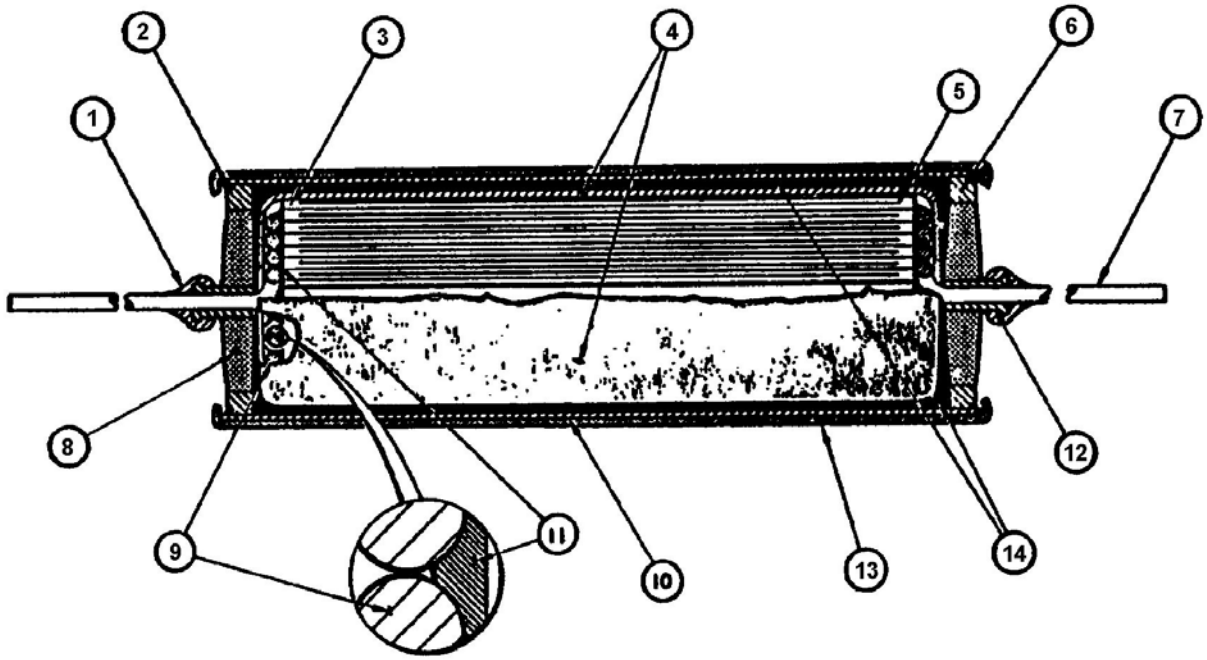

ITEM	ITEM NAME	ITEM	ITEM NAME
1	Solder-Lead Seal	7	Lead
2	Seal Solder	9	Lead-To-Foil Attachment
3	Dielectric	10	Can
4	Capacitor Element-to-case Insulator	11	End Spray
		12	Header
5	Electrode	13	Case Insulation
6, 8	End Seal Assembly	14	Potting

FIGURE 10-6. Typical extended foil (paper/film) capacitor.

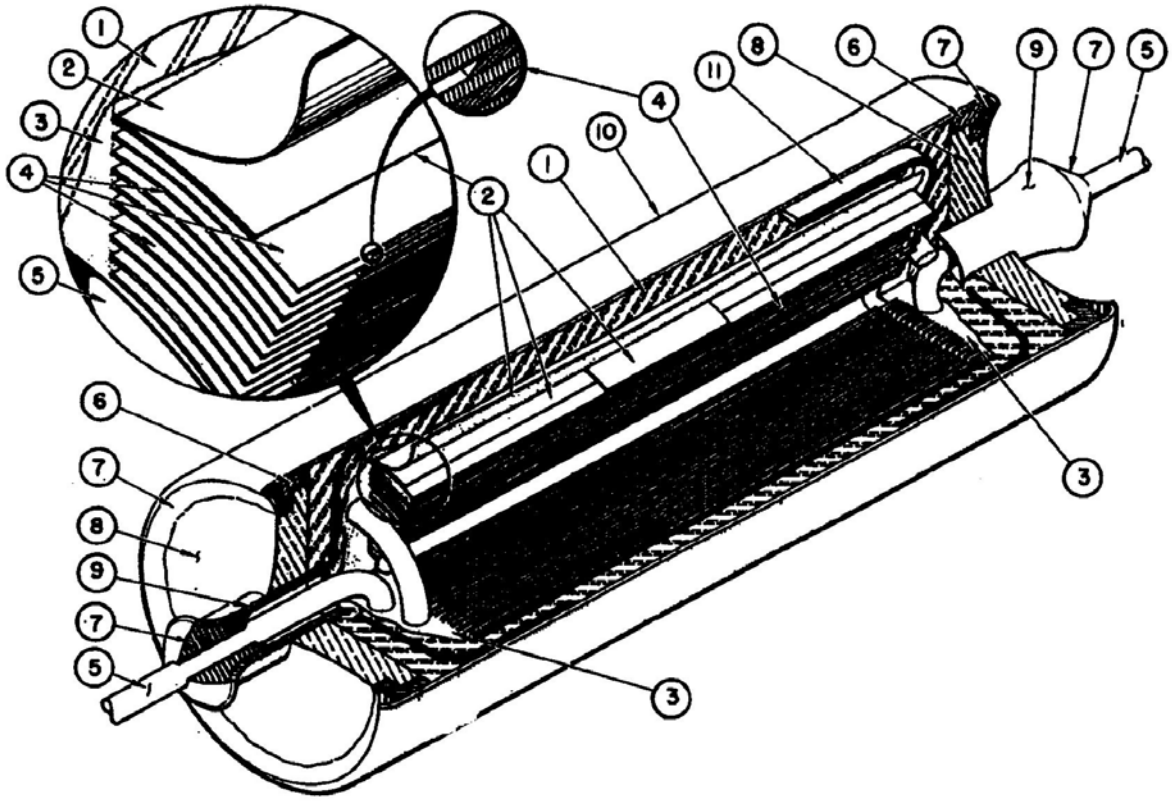

ITEM	ITEM NAME	MATERIAL OF CONSTRUCTION
1	Filler	Polymeric Compound
2	Conductor/Dielectric	Metalized Polycarbonate
3	End Spray	Proprietary
4	Dielectric Interleaf	Polycarbonate
5	Leads	Copper Clad Steel, Tin Coated
6, 7, 8, 9	End Seal Assembly	Glass-To-Metal Seal
10	Case	Tin Coated Brass
11	End Cap	Polymeric Material

FIGURE 10-7. Typical metallized film capacitor.

10.7.2 Data records. DPA findings that deviate from the specified configuration or other requirements shall be documented as defects.

10.7.3 Evaluation criteria. This inspection should be adjusted as necessary to accommodate variations in design. When the DPA is being conducted as a lot conformance test, the associated production lot shall be rejected if one or more of the DPA samples exhibit any of the following defects:

a. Cracked or broken glass end seal.

b. Solder rundown or splatter inside case in area of rolled film.

c. Loose (or moveable) element due to insufficient potting or inadequate restraint when potting is not used, (other physical restraints may be provided to restrict element movement). The DPA shall be conducted so that the existence and suitability of these restraints are verified. When potting is used to stabilize the element it must be free of voids that would permit the element to move during shock and vibration.

d. Absence of insulator caps over ends of element.

e. Loose wire or broken solder joint where lead attaches to element end spray (babbitt).

f. Broken or damaged lead wire (internal or external).

g. Contamination or foreign material embedded between windings.

h. Less than 25-percent eyelet solder fill (from outer end of eyelet).

i. Eyelet solder separation from lead or from inside diameter of eyelet.

j. Voids or holes through the outer end seal.

k. Scratches in the metallization which penetrate the dielectric. Note that it is characteristic of these parts to have burned-out areas in the metallization caused by the high voltage "clearing" process. These spots should not be classified as defects unless there is obvious damage to the dielectric.

l. Folds, blisters, or wrinkles in the dielectric winding.

m. End spray coverage that does not provide at least 75% area contact to all winding turns.

n. Poor adhesion between end spray and element, or between end spray and external lead connection.

o. Seal leakage in excess of specification requirements.

p. Any other defect that may reduce part reliability.

10.8 Capacitors, fixed, tantalum slug, wet electrolyte (MIL-PRF-39006/22 and MIL-PRF-83500/01). Two typical capacitor designs are shown on figures 10-8 and 10-9.

10.8.1 Method.

10.8.1.1 External visual. Perform external visual inspection at a minimum of 20X magnification. Check condition of glass seal and the nickel-to-tantalum lead weld. Check for physical damage to weld area that could be evidence of bending leads too sharply in the critical weld zone. Check for any bulges or dents in the case.

10.8.1.2 Hermeticity. Conduct seal tests on each sample in accordance with the requirements of the procurement specification. Remove sleeving before conducting the tests.

10.8.1.3 Decapsulation. CAUTION: Capacitor electrolyte is an acid solution and must be handled with extreme care. When performing DPA, ensure that handling of acid is performed using all applicable safety equipment per state, federal or other local quidelines for handling and disposal of hazardous materials.

Cut case around anode end to a depth equivalent to the case thickness being careful not to cut into the anode. Some capacitors have a groove in the case on the anode end. The cut must be between the groove and the cathode end, and as near to the groove as possible. Separate the two sections and remove the spacer by cutting with an Exacto blade (or equivalent) longitudinally along the lead.

10.8.2 Data records. DPA findings that deviate from the specified configuration or other requirements shall be documented as defects.

10.8.3 Visual evaluation criteria. When the DPA is being conducted as a lot conformance test, the associated production lot shall be rejected if one or more of the DPA sample parts exhibit any of the following defects.

10.8.3.1 Visual examination. All exposed inner surfaces of each capacitor shall be examined for the following characteristics at 30X minimum magnification:

a. Space between the anode bushing and the anode.

b. Broken lead or defective lead welds.

c. Complete absence of electrolyte, or insufficient level of liquid or gel when compared to electrolyte levels of other samples of the same lot.

d. Improper seating (fit) of the Teflon, rubber, or equivalent-type boot between the outside diameter of anode and inside diameter of case, and between anode and bottom of case.

e. Scratches or cracks that are not oxidized, or broken or distorted anode.

f. Color of anode and riser indicative of incorrect formation voltage for the dc voltage rating of the capacitor. Any secondary color or spot graying suggests abusive conditions and may be cause for lot rejection. The color shade of the oxide may differ slightly for different lots of capacitors or may even vary slightly for units within the same lot. This is normal and is not cause for rejection.

g. The external portions of glass seal and around cathode weld area shall be free of acid. A useful test technique is to apply a 0.01 percent thymol blue, which turns red in the presence of acid.

h. Cracked or broken glass in seal assembly.

i. Seal leakage in excess of specification requirements.

j. Any other defect that may reduce part reliability.

k. Foreign material in electrolyte.

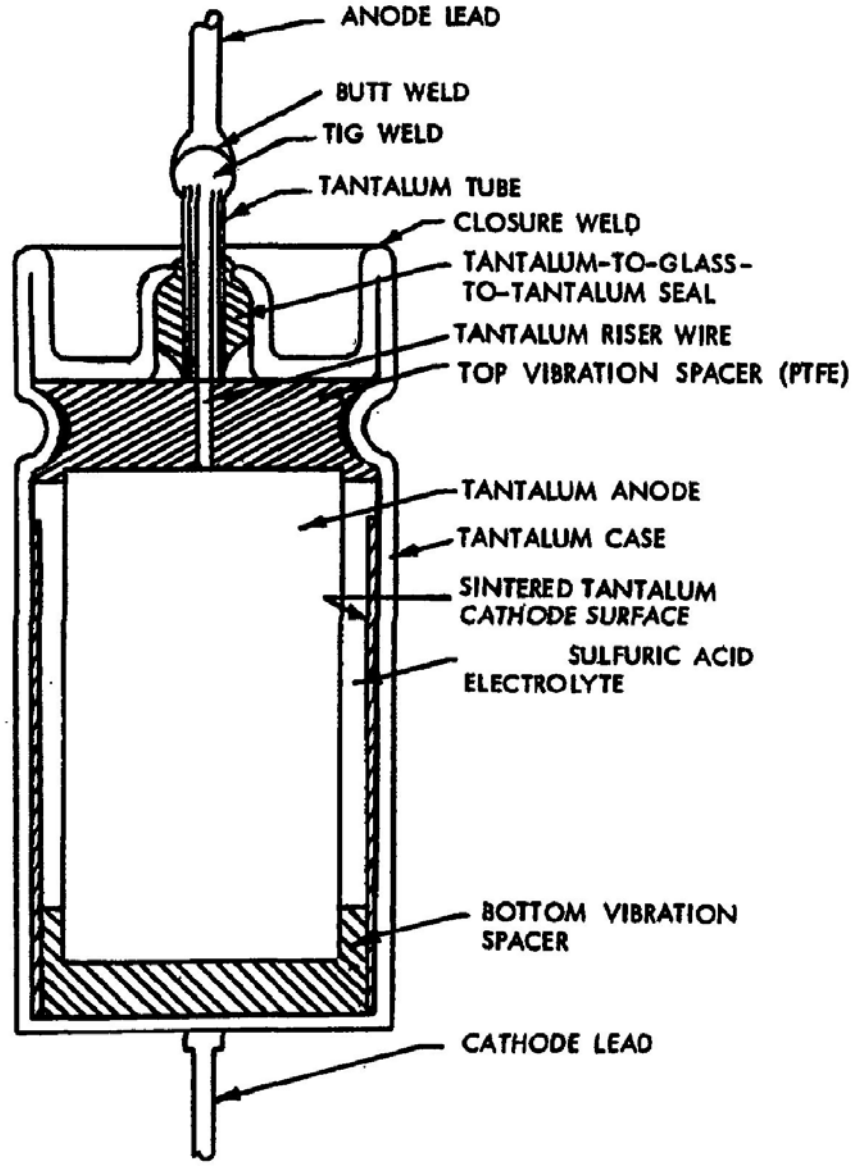

FIGURE 10-8. Capacitor, fixed, tantalum, wet slug.

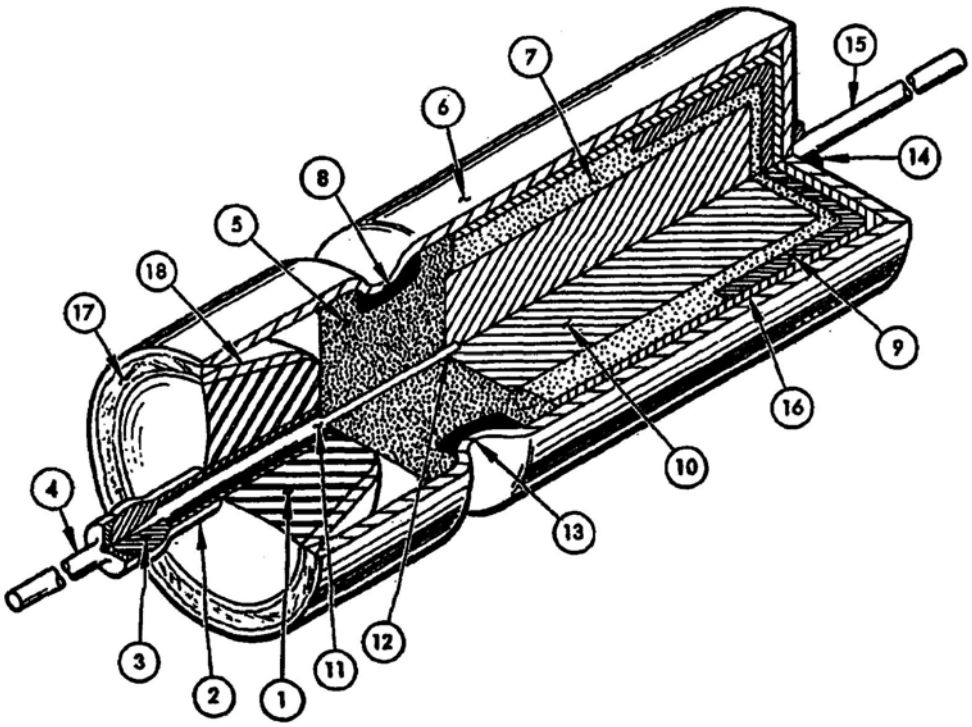

ITEM	ITEM NAME	ITEM	ITEM NAME
1	Glass Insulator	10	Tantalum Anode
2	Eyelet Tubulet	11	Anode Riser (Ta)
3	External Lead Weld	12	10-to-11 Interface
4	Anode Lead	13	Case Crimp
5	Teflon Bushing	14	Cathode Lead-to-case Weld
6	Taptalum Case	15	Cathode Lead
7	Gelled Acid Electrolyte	16	Ta Cathode Sleeve
8	Silicon Rubber Bushing	17	Header Weld
9	Teflon Cup	18	Header

FIGURE 10-9. Capacitor, fixed, tantalum, wet slug.

10.9 Capacitor, fixed, glass (MIL-PRF-23269). A typical glass capacitor construction is shown on figure 10-10.

10.9.1 Method.

10.9.1.1 External visual. Record all markings and identification on each part and package, and check for configuration compliance. Inspect each sample, at 20X minimum magnification, for surface cracks, voids, chip-outs, and defects on the seal and leads.

10.9.1.2 Hermeticity. Conduct seal test on each sample in accordance with the applicable procurement specification.

10.9.1.3 Sample preparation. Parts shall be cleaned, oriented, mounted, and polished in accordance with EIA-469. Polish each sample so that edges of the capacitor plates are clearly visible.

10.9.2 Data records. DPA findings that deviate from the specified configuration or other requirements shall be documented as defects.

10.9.3 Evaluation criteria. When the DPA is conducted as a lot conformance test, the associated production lot shall be rejected if one or more of the DPA samples exhibit any of the following defects. All exposed inner surfaces of each capacitor shall be examined for the following characteristics at minimum magnification of 30X:

a. Cracked, chipped, or discolored glass.

b. Holes in glass extending into the conductor area.

c. Air bubble bridging plates.

d. Any contamination or foreign material trapped in the glass.

e. Nonuniformity of dielectric thickness.

f. Any defect, like cracks, on plate-to-lead weld, lead-to-glass seal, and ceramic disc fused into glass at lead egress point.

g. Any condition that is an obvious manufacturing defect.

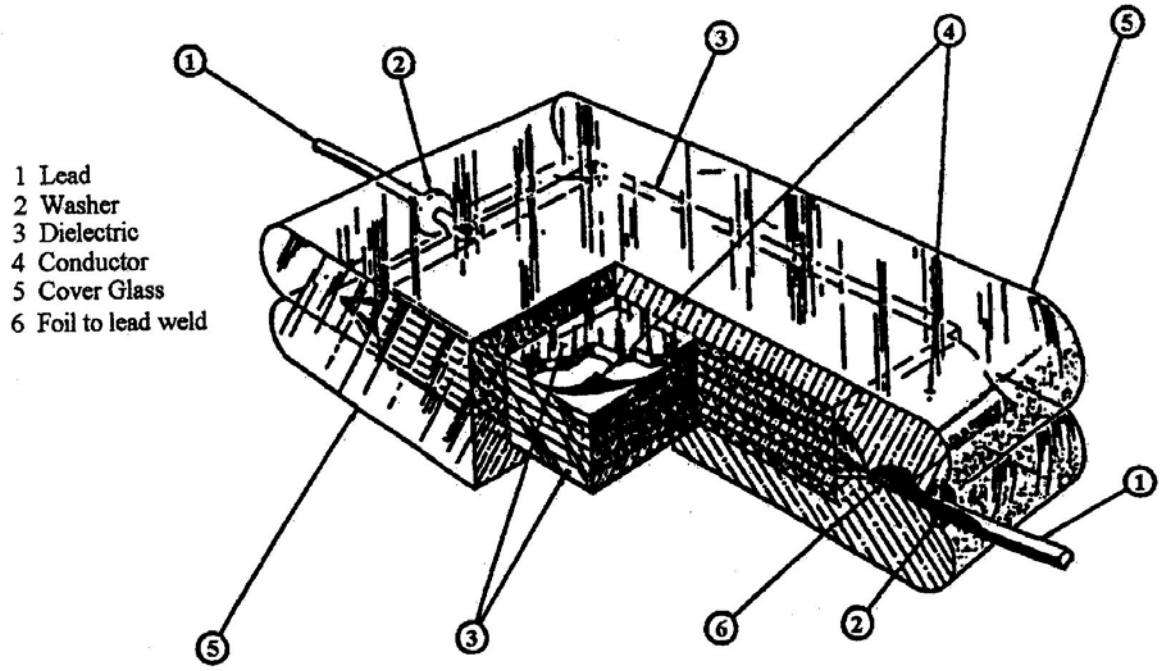

FIGURE 10-10. Typical Glass Capacitor,

10.10 Capacitor, variable, piston type, sealed and unsealed (MIL-PRF-14409). A typical rotating piston, nonrotating piston, and a vertically mounted, sealed, variable capacitor design are illustrated on figure 10-11 through 10-13.

10.10.1 Method.

10.10.1.1 External visual. Record all markings and identification on each part, and inspect for configuration compliance. Perform external visual inspection at 20X minimum magnification. Check condition of seal. Inspect for physical damage to body and leads. The piston shall be checked for ease of rotation (completely in and out) ten times.

10.10.1.2 Hermeticity. Conduct seal tests, if applicable, on each sample in accordance with the requirements of the procurement specification.

10.10.1.3 Examination. Examination and disassembly should be done under a microscope with 30X magnification and in a clean work area.

10.10.1.4 Disassembly.

a. The air dielectric units are opened by rotating their rotor screw counter-clockwise until the rotor assembly is completely disengaged.

   NOTE 1: Two types of friction locks are commonly used, and the presence of the type used must be assessed. One type is a gland of plastic that binds the threads, and the alternate is a screw thread of different pitch from the main body. The "two-pitched" style probably introduces galling of the threads and may result in some minor particle generation which is normal; however, excessive particles are not allowed. No particles are permitted within the inner threads under any circumstances.

   NOTE 2: In some devices it may be necessary to unsolder the end cap containing the adjustment screw to permit removal of internal parts.

b. Nonremovable rotor capacitors shall be opened by lathe-cutting of the rolled end of the bushing and by unsoldering the ceramic insulator from the bushing and stator.

c. Glass dielectric variable capacitors require unsoldering of the "rotor" plate. Internal inspection of this device is similar to the others.

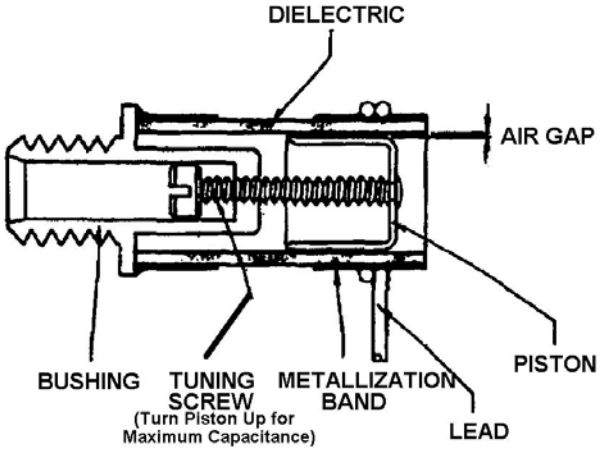

FIGURE 10-11. Rotating piston style.

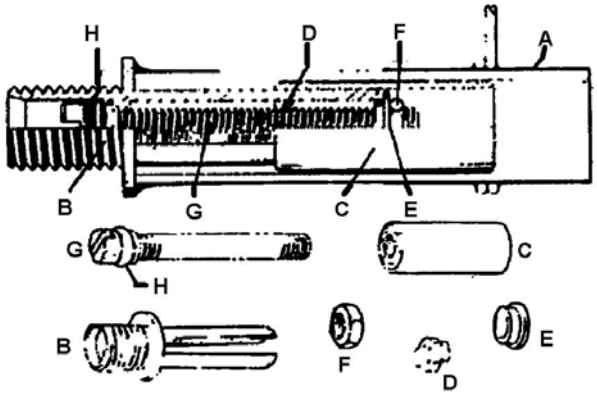

A	Metalized Dielectric Tube
B	Bushing
C	Piston
D	Teflon anti-backlash washer
E	End stop (stainless steel)
F	Nut - (brass, nickel plated)
G	Screw- = 2.72 (stainless steel)
H	“O” ring

FIGURE 10-12. Nonrotating piston style.

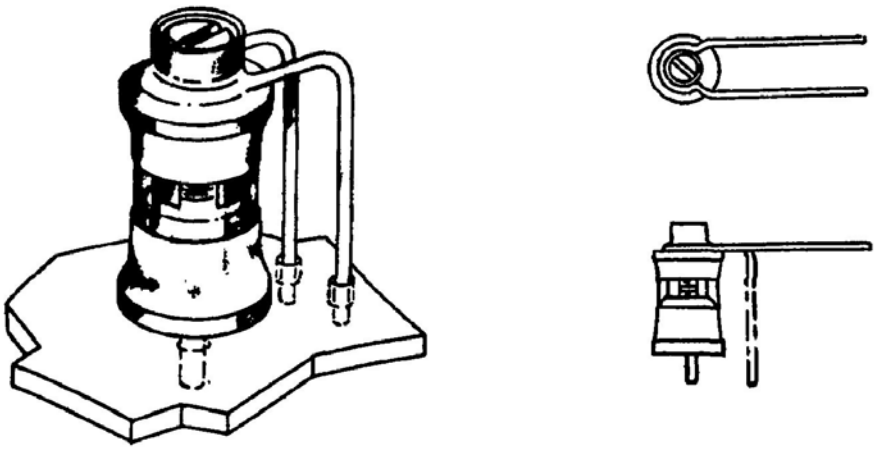

FIGURE 10-13. Vertically mounted printed circuit board sealed style (sealed).

10.10.1.5 Sample sectioning. One sample shall be encapsulated and sectioned axially through the center of the device. A photograph shall be taken of a typical sample and attached to the DPA data sheets. The magnification of the photograph shall be such that the sectioned device fills the entire photograph. Any anomalies noted shall also be photographed.

a. Prior to encapsulation, the protective seal cap, if any, shall be removed and the lead screw rotated clockwise until the piston is fully engaged.

b. The device shall be vacuum-impregnated with encapsulating media such that the entire internal cavity is filled.

10.10.2 Data records. DPA findings that deviate from the specified configuration or other requirements shall be documented as defects.

10.10.3 Evaluation criteria. When the DPA is being conducted as a lot conformance test, the associated production lot shall be rejected if one or more of the DPA sample parts exhibit any of the following defects.

10.10.3.1 Visual examination. All exposed inner surfaces of each capacitor shall be examined for the following characteristics at a minimum magnification of 30X.

a. Scratches or abrasions on any parts or surfaces where movement occurs with respect to other parts or surfaces within the assembly.

b. Loose metallic particles (or any other particles) or other types of contamination, such as flux residue.

c. Corrosion on piston surface, screw, or cylinder walls.

d. Cracked or warped parts.

e. Burrs, gouges, or particles in the threaded areas.

f. Blistering, flaking, bubbles, pits, cracks, foreign material, or peeling of plated surfaces.

g. Nonconcentric, bent, distorted, or misaligned rotors and stators (or piston and bore); or irregularities, such as bumps and nicks on surfaces.

h. Improper seating and solder joints of the tubes.

i. Lack of Apiezon H (where applicable) from threads.

j. Cracks in glass dielectric (where applicable).

k. Insulator (where applicable) damaged or missing from stator.

l. Solder joints (as applicable) that show voids, insufficient filleting, or signs of a cold joint.

m. Noticeable amounts of lubricant.

10.11 Capacitor, fixed, solid tantalum chip style (MIL-PRF-55365). Typical solid tantalum capacitor are illustrated in figures 10-14 and figure 10-15.

10.11.1 Method.

10.11.1.1 External visual. Examine devices at 10-30X magnification for marking and configuration compliance as well as the following:

a. The body encapsulant shall be free of cracks, holes and voids that expose internal elements or chipouts that reduce the case wall thickness by 50% for molded case styles. The openings between the end caps and the body shall be filled for CWR06.

b. The terminations shall be coated with the specified coating material (gold plate or solder). Minor areas of exposed base metal are acceptable provided that they do not collectively exceed 5 percent of the surface area of the terminations.

c. The anode riser shall be welded to the end cap around a minimum of 90 degrees (or one quarter) of the circumference of the wire. (Not applicable for molded styles)

d. There shall be no evidence of lead-forming stress cracks on the external leads of molded style capacitors.

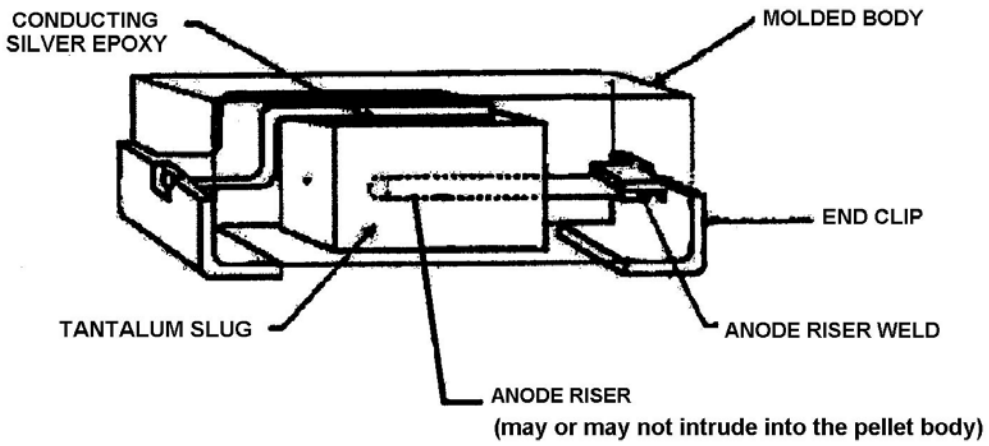

FIGURE 10-14. Typical molded epoxy solid tantalum chip capacitor (CWR09).

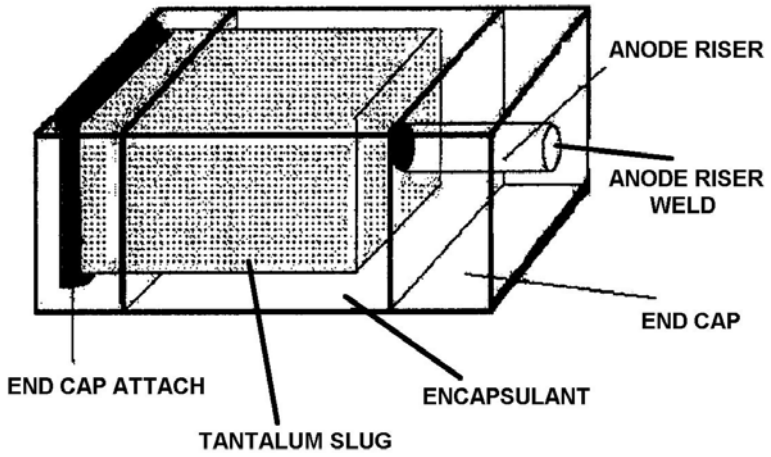

FIGURE 10-15. Typical non-epoxy molded solid tantalum chip capacitor.

10.11.1.2 Sectioned samples. All of the samples shall be potted in clear epoxy and sectioned axially in a plane along the end caps to the midpoint in order to expose the anode riser weld and slug attachment interfaces. Caution should be exercised to ensure damage is not induced during sectioning. Examine using 30X minimum magnification for configuration compliance, and for defects as listed below:

a. For devices without epoxy molded cases (orange, blue), the anode riser shall be welded to the anode (when applicable) and/or the anode end cap, with evidence of a metallurgical bond.

b. There shall be a layer of conductive (silver) epoxy joining the silver coated end of the pellet to the external cathode lead or end cap. For CWR06s, the conductive epoxy may coat the inner surfaces of the cathode end cap on all available sides, but shall not be present along the body or close to the positive end (anode riser) of the pellet. Likewise, for molded styles, evidence of silver going (beyond the shoulder of the pellet) near the riser wire is not acceptable." As in any component with two terminals separated by a dielectric, you don't want metal smears (especially silver, since it migrates) that can create a bridge between the two terminals and cause a short, particularly in the presence of moisture.

c. For epoxy molded cased devices, there shall be a silver epoxy attachment joining the cathode terminal to the silver coated tantalum slug. This attachment shall not be voided or lacking attach across more than one half (50 percent) of its possible attachment interface.

d. For devices without epoxy molded cases (orange, blue), there shall be a silver epoxy attachment joining the cathode end cap to the silver coated tantalum slug. This attachment shall not be voided or lacking attach across more than one half (50 percent)of its possible attachment interface (end of anode slug only).

e. For all styles, significant silver epoxy segregation or seperation/cracking of the silver particles away from the cathode end cap/end clip terminal attach interface with the silver coated tantalum slug shall be unacceptable.

f. For all styles, no gaps in the body coating material shall exist that expose the silver epoxy coated tantalum slug.

g. For devices without epoxy molded cases (orange, blue), the remaining area between the inner surface of the cathode end cap and tantalum slug shall be filled with non-conductive potting material. The positive end cap need not be potted, however, the inner surface of the open end shall be filled so that no gaps are present to the exterior of the device between the end cap and the anode.

h. For epoxy molded cased devices, there shall be evidence of a smooth and continuous metallurgical bond/weld between the anode riser and the external anode lead for no less than 25 percent of the available overlap.

i. For epoxy molded cased devices, the riser wire-to-external lead weld shall not create a misalignment greater than 15 degrees between riser and lead. Additionally, this weld shall exhibit molding compound between the end of the riser wire and the outer package edge.

j. There shall be no pinholes on the conformal coating of CWR06 capacitors that expose any surface of the capacitor element, or cracks on the molded case of all molded capacitors, or chipouts that reduce the case wall thickness by 50%. There shall be no evidence of lead-forming stress cracks on the external leads of all molded capacitors.

10.11.2 Data records. DPA findings that deviate from the specified configuration or other requirements shall be documented as defects.

REQUIREMENT 11

DETAILED REQUIREMENTS FOR CONNECTORS

11. General. This section describes detailed requirements for a DPA of commonly used connectors. These requirements supplement the general requirements in section 4. Examples of typical configuration sketches are included. When applicable, specification numbers or types are referenced to assist in identification. Pre-DPA tests such as functional tests, mating, and solderability tests, are assumed to have been satisfied by normal inspection and testing and are therefore not addressed.

11.1 Connectors, multipin, excluding contacts. Typical multipin connectors are shown on figure 11-1 and figure 11-2. Connectors are illustrated with contacts.

11.1.1 Methods.

11.1.1.1 External visual. Inspect each sample at 7X to 10X magnification for the following defects which may be considered risks:

a. Item marking and identification compliance to applicable specification.

b. Dimensional check against applicable specification.

c. Foreign material contamination.

d. Chips, cracks, or other defects in the inserts.

e. Check hermetic connectors for inadequate glass wetting.

f. Plating defects such as porosity, burrs, blow holes, cracks, peeling, and flaking.

h. Clocking.

i. Keys and keyways.

j. Retainers (an otoscope or similar device may be used).

k. Free running threads.

l. Lubricants.

11.1.1.2 X-ray examination. Nondestructive internal examination is accomplished by X-ray to check for misaligned or missing parts, cracks, breaks, and other defects which are considered failure mechanisms.

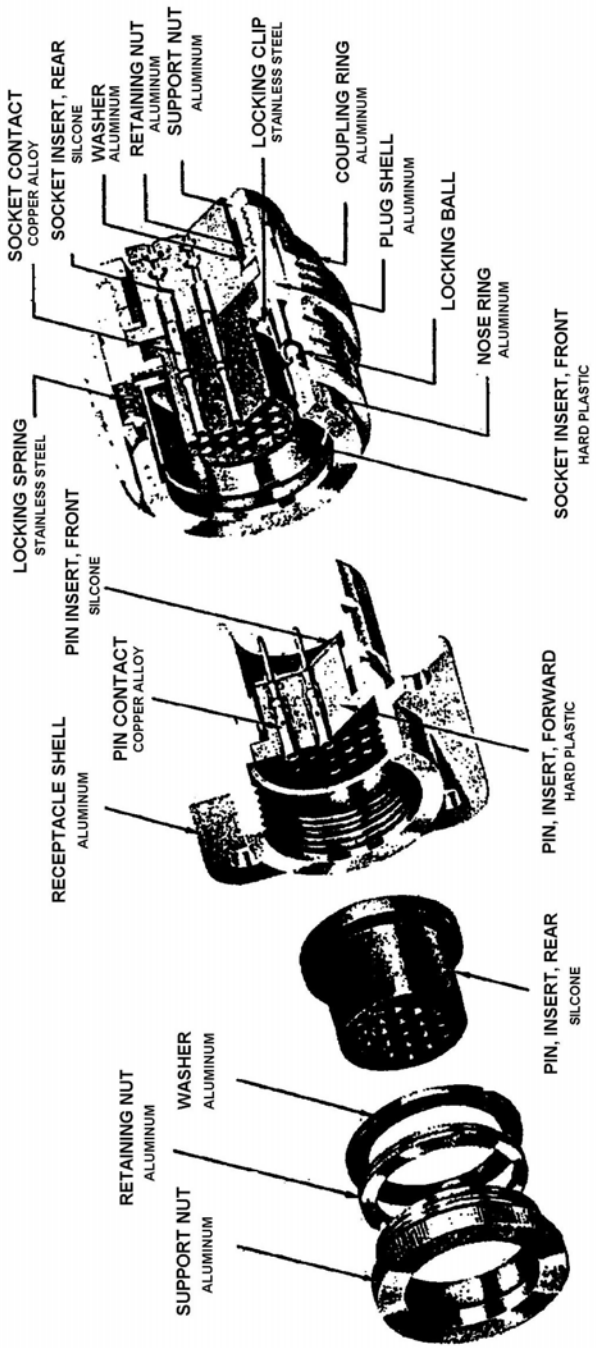

FIGURE 11-1. Typical multipin connector.

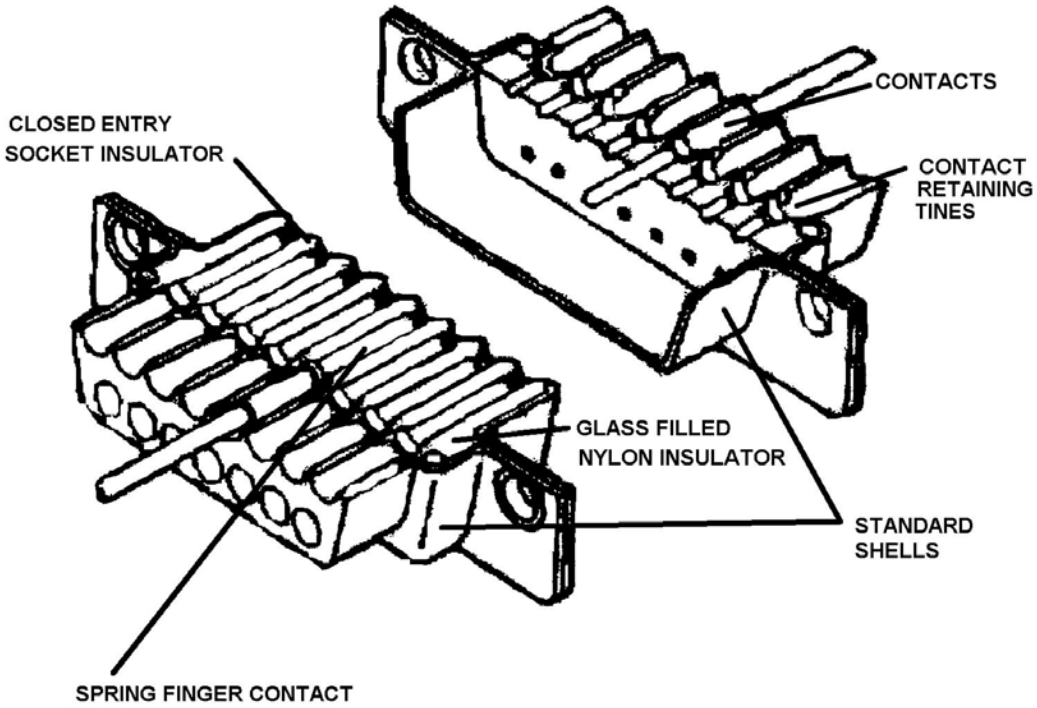

FIGURE 11-2. Typical rectangular multipin connectors.

11.1.1.3 Physical tests. The requirements of the controlling document and the following test shall apply.

a. Each cavity shall be checked for insertion force.

b. Each cavity shall be checked for contact retention.

c. Plating thickness of the shell and other plated parts may be checked with a beta back-scatter instrument or sectioned and examined at 1000X magnification.

d. Plating adhesion testing shall be performed on all samples. This test may induce minor cracks in the plating or base metal and shall not be considered defects, unless accompanied by flaking, blistering, or peeling.

e. Test for insulator retention by applying a 100 psi or 25 pounds minimum force perpendicular to the insulator face. Any displacement visible to the eye is considered a failure.

11.2 Connectors, multipin, with contacts. All connector samples shall be subjected to the inspections and tests detailed in 11.1. In addition, they shall be tested in accordance with 11.2.1 and sectioned and inspected in accordance with 11.2.1.2. Figures 11-1 and 11-2 illustrate typical multipin connectors.

11.2.1 Methods.

11.2.1.1 Electrical test. Each connector sample shall meet the insulation resistance (IR) and Hi Pot requirements of the applicable specification.

11.2.1.2 Sectioning. Pot each connector sample in clear epoxy. Pull a vacuum on each sample during the potting procedure.

11.2.1.2.1 Fixed contact connectors. Cut each sample along the longitudinal axis on the center of the connector and one contact. Polish and examine both halves under 10X magnification to verify that:

a. The insulator is formed and installed in accordance with the applicable specification.

b. The elastomer and plastic members are not molded or conforming to each other.

c. There is proper bonding between the shell and insert.

In addition, section and inspect at least one contact for required plating thickness at a suitable magnification.

11.2.1.2.2 Removable contact connectors. Samples may be examined as follows: Cut the connector through along the longitudinal axis on the center of the connector and a contact. Polish each half and perform the visual examination and contact plating inspection identified in 11.2.1.2.1. Then inspect the contact retention for proper installation and for possible broken or missing tangs.

11.2.1.3 SEM. Connector samples with known defects or suspected of containing defects shall be examined further with an SEM. The samples shall be scanned and photographed at sufficient magnification to obtain clear, sharp images of the suspect area. All SEM results are to be a permanent part of the DPA records.

11.3 RF connectors. Typical RF connector is shown on figure 11-3.

11.3.1 Methods.

11.3.1.1 External examination. Examine each sample for the possible defects identified in 11.1.1.1 a, b, c, i, j, k, and l. In addition, conduct the following tests:

a. Contact stress test. A maximum diameter test pin shall be inserted 100 times. The socket shall not show evidence of cracks at the bottom of the slots.

b. Separating force test. Use a minimum diameter test pin.

c. Axial contact retention.

d. Rotational contact retention.

e. Plating thickness of shell coupling shall comply to the applicable specification.

f. Plating adhesion. See 11.1.1.3.d.

11.3.1.2 Internal examination. Pot the connector sample in clear epoxy. Pull a vacuum during the potting process. Whenever possible, connector pairs should be sectioned together. Cut along the longitudinal axis through the center of the connector(s) and the center pin. Inspect for:

a. Integrity of the epoxy staking.

b. Workmanship in areas such as brazed, soldered, and conductive epoxy joints, and the lock ring area.

c. The mating surfaces of the ring, body, and coupling nut cannot be rounded, chamfered, or sloped.

11.4 Contacts. Test contact samples to the applicable specification requirements and the following.

11.4.1 Methods.

11.4.1.1 Visual examination. Test a random selection of one-half the contact sample for:

a. Dimensional accuracy and marking.

b. Plating adhesion. See 11.1.1.3d.

c. Plating thickness. A beta back-scatter may be used, or pot the samples with a clear epoxy, section in half longitudinally, and measure at 1000X magnification.

11.4.1.2 Solder contacts. A minimum of four contacts shall be soldered with a length of wire 0.15 meters to 0.30 meters (6 to 12 inches) long, complying to MIL-W-81044 or MIL-DTL-81381. Inspect for proper wetting, solder flow, and general appearance.

11.4.1.3 Crimp contacts. Crimp a minimum of four contacts to the minimum allowable wire gauge, and two contacts to the maximum allowable wire gauge. Examine all crimps under 20X magnification for cracks or crazing of the plating or base metal. Four samples should then be tested for tensile strength in accordance with the applicable contact specification.

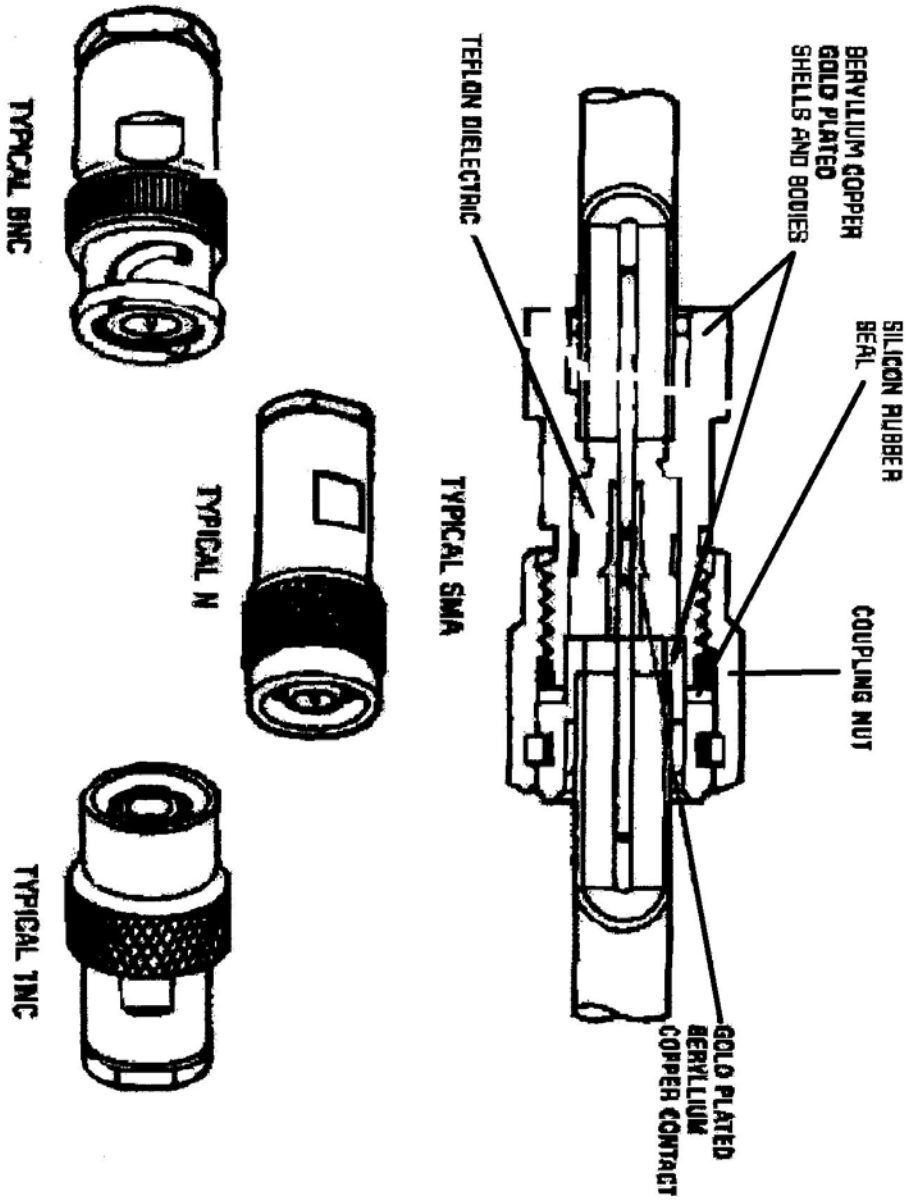

FIGURE 11-3. Typical RF connector.

REQUIREMENT 12

DETAILED REQUIREMENTS FOR QUARTZ CRYSTALS

12. General. This section describes detailed requirements for a DPA of commonly used quartz crystals. These requirements supplement the general requirements in section 4. Examples of typical configuration sketches are included. When applicable, specification numbers or types are referenced to assist in identification. Pre-DPA tests, such as functional tests and solderability tests, are assumed to have been satisfied by normal inspection and testing and are therefore not addressed.

12.1 Crystal units, quartz (MIL-PRF-3098). A typical crystal is shown on figure 12-1.

12.1.1 Method.

12.1.1.1 External visual. Visual inspection at 30X minimum magnification shall be conducted with the crystal being illuminated with a light source of at least 300 foot-candle intensity and a grazing angle of about 20 degrees. Units exhibiting one or more of the following anomalies shall be rejected.

a. Adherent weld splatter exceeding 0.80 millimeters (.031 inches) dimension in any plane.

b. Crack or holes in any welded joint.

c. Indications of corrosion or discoloration on any metal surface.

d. Any dents or protrusions into the case.

e. Cracks, fractures, misalignments, or bends in case-to-lead or case-to-stud joints.

12.1.1.2 Hermeticity. Verify hermetic seal in accordance with the requirements of part specification.

12.1.1.3 Radiographic examination. Perform radiographic examination on all samples in accordance with method 209 of MIL-STD-202.

12.1.1.4 Particle impact noise detection (PIND). Perform PIND testing on all samples in accordance with method 2020 of MIL-STD-883, condition A.

12.1.1.5 Internal water vapor testing/residual gas analysis (RGA). Perform internal water vapor /RGA testing in accordance with method 1018 of MIL-STD-883. The sample size for this testing will be one for QPL/QML devices and three for non-QPL devices with zero failures or five devices with a maximum of one failure (3/0, 5/1).

12.1.1.6 Sample preparation. During the process of opening the crystal enclosure, care must be exercised to assure that external liquid, gaseous, particulate, or other types of contamination do not enter the interior areas. Enclosures similar to the TO-5 type and other round-type quartz crystal holders; should be opened by using a special can opener device, designed specifically for that purpose. The TO-5 can opener device (also called Head Remover, Silicon) is commercially available. For other types of hermetically sealed, cold weld holders; a flat grinding wheel may be used to grind off the flange where the cover is joined by cold weld to the base. During each application of grinding the enclosure, precautions shall be taken to prevent penetration of the case. The grinding operation should only remove sufficient material to allow the can to be readily cut through with a sharp cutting instrument such as an Exacto knife blade. To avoid damage, the crystal enclosure and inner assembly should be firmly held by hand during each step of the opening procedure. Devices such as vises, clamps, pliers, or similar instruments should not be used. After completion of the grinding operation, and just prior to penetration or opening of the crystal enclosure, all external surfaces shall be cleaned to remove any particulate or other contaminants from the case. The hands and instruments used in the final opening step should also be thoroughly cleaned and free of any contaminants. The final opening step should be done over a clean white contaminant-free bench or paper surface.

12.1.1.7 Internal visual. All exposed inner surfaces of the device shall be examined at a minimum magnification of 30X and in accordance with the procedure in 12.1.1.1 for configuration compliance and existence of anomalies.

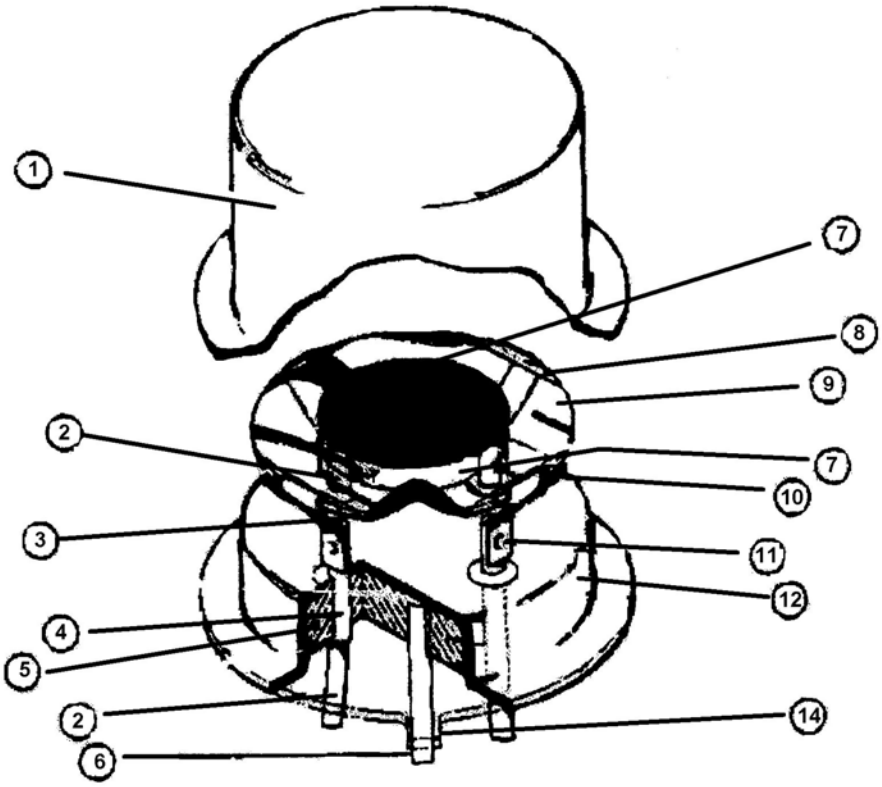

ITEM	ITEM NAME
1	Cover
2	Lead
3	Support
4	Lead
5	Glass Seal
6	Lead
7	Electrode
8	Fired Silver
9	Resonator (Quartz)
10	Bonding Cement
11	Weld
12	Base
14	Index Tab

FIGURE 12-1. Typical quartz crystal unit.

12.1.2 Data records. DPA findings that deviate from the specified configuration or other requirements or exhibit anomalies shall be documented as defects.

12.1.3 Evaluation criteria. When the DPA is being conducted as a lot conformance test, the associated production lot shall be rejected if the DPA sample parts exhibit any of the following defects:

a. Cracks or holes in the weld contact area where crystal support members are welded to the holder base terminal pins.

b. Loose, distorted, or broken terminal pins or crystal mounting supports.

c. Cracks or separation in silver-epoxy electrically conductive bonding cement between quartz crystal and support member.

d. Fractures of any size in any location in the crystal quartz resonator, cracked or flaked edges, and fractures, cracks, peeling, or voids in electrodes.

e. Loose weld spatter, bonding cement, extraneous epoxy, or other foreign matter found on the header, the crystal and support structure, or inside the cover.

f. Less than 0.125 millimeters (.005 inches) clearance between the quartz crystal holder cover and the quartz crystal with its mounting support.

g. Cracks or visible bubbles in glass headers.

h. Chemical corrosion of any metallic surfaces in crystal can or associated support structure.

i. Quartz crystal resonator not perpendicular or parallel to the base within the requirements of the procurement specification.

j. Seal leakage in excess of specification requirements.

k. Joining of packages by interface that reduces part reliability.

l. Any surface, including cover, exhibiting contamination (adhering particulate, film, flux residue, or other type).

m. Nonuniform quantities of bonding cement at mounting points or bonding cement in areas other than mounting points.

n. Adhering weld splatter with a dimension exceeding 0.80 millimeters (.031 inches) through any plane. Weld splatter shall be considered adherent when it cannot be removed with a gas blow of dry oil-free nitrogen from a 150 kilopascal (22 psi) gauge pressure source.

o. Base terminal and crystal mounting support exhibiting nicks, misalignment, cuts, cracks, or distortion.

p. Quartz crystal not centered within ±0.80 millimeters (±.031 inches) in its mounting with respect to the quartz crystal holder base.

q. Any other defect that reduces part reliability, such as evidence of peeling plateback metallization, voids, or missing metallization on either side of the crystal.

REQUIREMENT 13

DETAILED REQUIREMENTS FOR DIODES

13. General. This section describes detailed requirements for a DPA of commonly used diodes. These requirements supplement the general requirements in section 4. Examples of typical configuration sketches are found in method 2074, MIL-STD-750. When applicable, specification numbers or types are provided to assist in identification. Pre-DPA tests, such as functional tests and solderability tests, are assumed to have been satisfied by normal inspection and testing and are therefore not addressed.

13.1 Diodes, glass bodied, axial leaded and surface mount (MIL-PRF-19500).

13.1.1 Electrical Testing. Perform the appropriate Group A electrical test per the diode slash sheet or source control drawing. As a minimum, the following tests shall be performed.

Signal or Rectifying Diodes
I_R (reverse leakage)
V_F (forward voltage)

Zener Diodes
V_Z (zener voltage)
I_F (forward current)

13.1.2 Method. DPA examination shall be performed in accordance with method 2101 of MIL-STD-750 and as modified below.

13.1.2.1 Exceptions/clarifications to method 2101, MIL-STD-750 and as specified herein.

a. Electrical test - Required.

b. Axial lead tensile test - Required.

c. Resistance to solvents test - Not required.

d. Solderability test - Not required.

e. One half (round up) of the DPA samples shall be subjected to scribe and break testing and the other half shall be subjected to cross-sectioning.

13.2 Diodes, RF/microwave (gunn, pin, varactor, beam lead/quad arrays).

13.2.1 Method. RF/microwave diodes shall be tested in accordance with 21.1 herein. Some tests such as bond pull and die shear may not be practical due to the device size or construction. SEM will be used on all samples to adequately document die and bond attach integrity when these tests can not be performed, in addition to documenting anomalous conditions or verifying metallization coverage. Internal visual inspection shall be performed in accordance with method 2074 of MIL-STD-750, for these devices as applicable to the design.

13.2.1.1 Special instructions. Bond wires that are terminated within the lid-to-package interface, shall be examined at a minimum magnification of 400X in an SEM after delid for the presence of damage and neckdown due to the lid seal operation. Inspection criteria shall be in accordance with method 2074 of MIL-STD-750.

13.3 Metal can stud mounted and axial lead metal can instructions.

13.3.1 Method. The DPA examination shall be performed in accordance with method 2101 of MIL-STD-750 and as specified herein.

13.3.1.1 External visual examination. Perform an external visual examination at magnification of 15X or greater to adequately resolve the area being examined. Note any change from baseline drawings or any discrepancies. Take one representative photomacrograph of a sample device prior to sectioning and record any evidence of:

a. Damage, corrosion, or contamination.

b. Defects in seal or dents in package.

c. Defects in plating such as flaking, peeling, or blistering.

13.3.1.2 Hermetic seal. The devices shall be tested according to method 1071 of MIL-STD-750. Fine leak testing shall be according to condition G or H. Gross leak testing shall be according to condition C, D, or E. No bubbles or fluorescent residue should be present.

13.3.1.3 Radiographic examination. Radiograph all samples in two views 90 degrees apart (x and y directions) in accordance with method 2076 of MIL-STD-750 and note any anomalies.

13.3.1.4 PIND. Perform PIND testing on all samples in accordance with method 2052 of MIL-STD-750, condition A.

13.3.1.5 Internal water vapor testing/ RGA. Perform internal water vapor/RGA testing in accordance with method 1018 of MIL-STD-750. The sample size for this testing will be one for QPL/QML devices and three for non-QPL devices with zero failures or five devices with a maximum of one failure (3/0, 5/1). It is preferred that additional devices over and above the DPA samples be provided for this testing so that it may be processed in parallel to the DPA. If this cannot be done due to cost or availability issues, care should be taken to ensure that a minimal amount of damage results to the internal structures of the device during this test. Any damage caused by the intrusion of the puncturing tool into the cavity(s) of the device(s) shall be noted.

13.3.1.6 Suggested package delidding. Prior to opening, the height of the header should be determined from the manufacturer's photo expositional drawings or from previous radiographic examination. The lid should be carefully cut with a special can opener device designed specifically for that purpose (any equivalent available device may be used). The cut in the lid should be at a point sufficiently above the header so that the cover can be easily removed by hand. During cutting and removal of the lid, care must be exercised to avoid damage of internal elements or introduction of external contaminants into the internal enclosure area.

13.3.1.7 Crimp tubulation inspection (applicable to crimped lead devices only). A minimum 50 percent of the samples (round down) with leads that are crimped to the internal posts of the device shall be opened in a manner such that a crimp pull test can be performed between the post and the crimped area of the tubulation. The minimum pull test strength allowable shall be one pound and the data shall be recorded. A sample of the worst case crimp (visually observed) shall be mounted and cross-sectioned in a plane transverse to the longitudinal axis of the tubulation through the most mechanically compressed portion of the crimp. Metal to metal contact must be a minimum of 75 percent of the post wire circumference.

13.3.1.8 Internal visual (decap visual). Each sample device shall be subjected to decap visual examination, which is in accordance with method 2074 of MIL-STD-750.

a. Determination of "as delivered" device condition: This examination is a verification that the device sealing process and 100-percent screening have not contaminated or otherwise adversely affected the devices.

b. Verification of pre-seal visual: This examination is a verification of the effectiveness of the pre-seal visual inspection for screening out rejectable devices. For DPA sample devices from inspection lots upon which pre-seal visual inspection has not previously been performed, this examination shall serve as a general assessment of the quality and internal condition of the devices in those particular lots.

13.3.1.9 Bond pull. Each device in the DPA sample shall undergo a destructive bond pull. All internal posts shall be pulled tested to destruction according to method 2037 of MIL-STD-750 and shall not separate or fracture at less than one pound (454 grams). The results of the bond pull test shall be recorded.

13.3.1.10 SEM examination. SEM examination shall be performed to verify metallization step coverage in addition to documenting anomalous conditions in the previous portion of the DPA. The step coverage evaluation will be performed on 50 percent of the DPA samples (round down) or a minimum of two, whichever is greater. All expanded metallization devices shall be inspected. The evaluation will be performed in accordance with method 2077 of MIL-STD-750.

13.3.1.11 Die shear testing. A die bond shear test shall be the final DPA step and shall be conducted on 50 percent (round down) of the samples or a minimum of two, whichever is greater. Die shear testing shall be conducted as specified in method 2017 of MIL-STD-750. The maximum force applied, the location of the shear, and the percentage of the die still attached shall be recorded and entered in the DPA report. An image of all anomalous conditions noted during this test shall be recorded. These images shall be taken of the header in such a manner as to show the amount of die or attach material remaining.

13.4 Transistor can wire bonded constructions.

13.4.1 Method. DPA examination shall be performed in accordance with method 2102 of MIL-STD-750 and as specified herein.

13.4.1.1 External visual examination. Perform an external visual examination at magnification of 15X or greater to adequately resolve the area being examined. Note any change from baseline drawings or any discrepancies. Take one representative photomacrograph of a sample device prior to sectioning and record any evidence of:

a. Damage, corrosion, or contamination.

b. Defects in seal or dents in package.

c. Defects in plating such as flaking, peeling, or blistering.

13.4.1.2 Hermetic seal. The devices shall be tested according to method 1071 of MIL-STD-750. Fine leak testing shall be according to condition G or H. Gross leak testing shall be according to condition C, D, or E. No bubbles or fluorescent residue should be present.

13.4.1.3 Radiographic examination. Radiograph all samples in two views 90 degrees apart (x and y directions) in accordance with method 2076 of MIL-STD-750 and note any anomalies.

13.4.1.4 PIND. Perform PIND testing on all samples in accordance with method 2052 of MIL-STD-750, condition A.

13.4.1.5 Internal water vapor testing/ RGA. Perform internal water vapor/RGA testing in accordance with method 1018 of MIL-STD-750. The sample size for this testing will be one for QPL/QML devices and three for non-QPL devices with zero failures or five devices with a maximum of one failure (3/0, 5/1). It is preferred that additional devices over and above the DPA samples be provided for this testing so that it may be processed in parallel to the DPA. If this cannot be done due to cost or availability issues, care should be taken to ensure that a minimal amount of damage results to the internal structures of the device during this test. Any damage caused by the intrusion of the puncturing tool into the cavity(s) of the device(s) shall be noted.

13.4.1.6 Suggested package delidding. Prior to opening, the height of the header should be determined from the manufacturer's photo expositional drawings or from previous radiographic examination. The lid should be carefully cut with a special can opener device designed specifically for that purpose (any equivalent available device may be used). The cut in the lid should be at a point sufficiently above the header so that the cover can be easily removed by hand. During cutting and removal of the lid, care must be exercised to avoid damage of internal elements or introduction of external contaminants into the internal enclosure area.

13.4.1.7 Crimp tubulation inspection (applicable to crimped lead devices only). A minimum 50 percent of the samples (round down) with leads that are crimped to the internal posts of the device shall be opened in a manner such that a crimp pull test can be performed between the post and the crimped area of the tubulation. The minimum pull test strength allowable shall be one pound and the data shall be recorded. A sample of the worst case crimp (visually observed) shall be mounted and cross-sectioned in a plane transverse to the longitudinal axis of the tubulation through the most mechanically compressed portion of the crimp. Metal to metal contact must be a minimum of 75 percent of the post wire circumference.

13.4.1.8 Internal visual (decap visual). Each sample device shall be subjected to decap visual examination, which is in accordance with method 2073 of MIL-STD-750.

a. Determination of "as delivered" device condition: This examination is verification that the device sealing process and 100-percent screening have not contaminated or otherwise adversely affected the devices.

b. Verification of pre-seal visual: This examination is a verification of the effectiveness of the pre-seal visual inspection for screening out rejectable devices. For DPA sample devices from inspection lots upon which pre-seal visual inspection has not previously been performed, this examination shall serve as a general assessment of the quality and internal condition of the devices in those particular lots.

13.4.1.9 Bond pull. Each device in the DPA sample shall undergo a destructive bond pull. All internal wire bond clip fasteners for each device shall be pulled to destruction according to method 2037 of MIL-STD-750. The maximum allowable pull rate shall be 0.05 Newtons (5 grams) per second. The minimum bond pull strength criteria shall be as specified in method 2037 of MIL-STD-750; results of the bond pull test shall be recorded.

13.4.1.10 SEM examination. SEM examination shall be performed to verify metallization step coverage in addition to documenting anomalous conditions in the previous portion of the DPA. The step coverage evaluation will be performed on 50 percent of the DPA samples (round down) or a minimum of two, whichever is greater. All expanded metallization devices shall be inspected. The evaluation will be performed in accordance with method 2077 of MIL-STD-750.

13.4.1.11 Die shear testing. A die bond shear test shall be the final DPA step and shall be conducted on 50 percent (round down) of the samples or a minimum of two, whichever is greater. Die shear testing shall be conducted as specified in method 2017 of MIL-STD-750. The maximum force applied, the location of the shear, and the percentage of the die still attached shall be recorded and entered in the DPA report. An image of all anomalous conditions noted during this test shall be recorded. These images shall be taken of the header in such a manner as to show the amount of die or attach material remaining.

REQUIREMENT 14

DETAILED REQUIREMENTS FOR FEED-THROUGH FILTERS

14. General. This section describes detailed requirements for a DPA of commonly used filters. These requirements supplement the general requirements in section 4. Examples of typical configuration sketches are included. When applicable, specification numbers or types are referenced to assist in identification. Pre-DPA tests such as functional tests and solderability tests are assumed to have been satisfied by normal inspection and testing and are therefore not addressed.

14.1 Filters, EMI, low pass, feed-through (MIL-PRF-15733 and MIL-PRF-28861). Typical configurations are illustrated on figures 14-1, 14-2, and 14-3. These devices are typically installed in a metal can with a glass-to-metal (hermetic) seal either with or without internal potting resin.

14.1.1 Method.

14.1.1.1 External visual. Conduct visual examination at 20X minimum magnification. Record variances in configuration, and defects in end seals, terminals, and leads.

14.1.1.2 Hermeticity. If not accomplished during receiving inspection, verify seal integrity in accordance with the requirements of the procurement specification.

14.1.1.3 Sample preparation. Sample preparation shall be in accordance with the requirements of MIL-PRF-28861. Review X-ray negatives prior to sample preparation, for internal component location and/or anomalies that can be highlighted during cross-sectioning.

14.1.1.4 Internal visual. Encapsulate all but one device in clear epoxy. Cross-section one half of the encapsulated devices (round up) in a plane parallel to the longitudinal axis of the device to the center point. The remaining encapsulated devices will be sectioned in a plane(s) transverse to the longitudinal axis of the device into the center point of all discoidal capacitors inside the device.

14.1.1.5 Chemical decapsulation. In the event cracks in the ceramic of the discoidal capacitor(s) are noted in the sectioned devices which are considered rejectable, the remaining unsectioned device shall be subjected to chemical decapsulation to expose the outer surfaces of the discoidal capacitor(s) for examination without the introduction of the stresses of cross-sectioning. The purpose of this test is to verify the findings at cross-sectioning. The outer metal case shall be immersed in a solution of 1:1 hydrochloric acid and nitric acid until it is completely dissolved and exposes the inner assembly of the device. If epoxy staking material is present within the device and attached to the discoidal capacitor(s), immerse the remaining assembly in fuming nitric acid until the epoxy is digested. This should expose the capacitor elements with the center feedthrough wire still soldered in place. Inspect the exposed surfaces of the capacitor(s) for cracks which would be similar to those noted in sectioning. Continued exposure to the 1:1 hydrochloric acid and nitric acid will further attack the center feedthrough solder and wire allowing for exposure of cracks within the center feedthrough hole. Care must be taken as the electrode plates within the capacitor(s) may also be attacked, and if subjected to attack too long, will allow for innerlayer dielectric separation of the capacitors. Inspect the inner feedthrough and exposed surfaces of the capacitor(s) for cracks as applicable to confirm previous cross-section results. If cracks are not detected, encapsulate the decapsulated discoidal capacitor(s) and cross-section along the feedthrough hole axis to midpoint and inspect for cracks similar to those detected at prior sectioning.

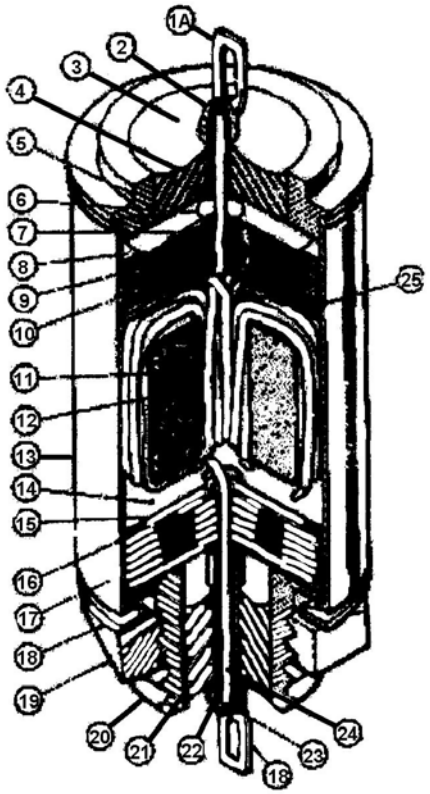

ITEM	ITEM NAME	MATERIALS OF CONSTRUCTION
1	Flag Terminal	Alloy 52
2, 23	Solder	20 percent Sa, 77 percent Pb, 3 percent Ag
3, 22	Terminal Extensions	Alloy 52
4, 21	Seal	Glass
5	Outer Flange	Gold Rolled Steel #1113
6, 9, 15	Solder	60 percent Sa, 33 percent Pb, 2 percent Ag
7	Eyelet	Tin Plated Brass
8, 16	Split, Ring	Tin Plated Brass
10, 17	Capacitor	Ceramic Capacitor (Proprietary Composition)
11	Core Coating	Enamel
12	Core	MTP-112 Moly-Permalite
13	Can	Ledloy “A”
14, 25	Washer	Mica
18	Lock Washer	Tin Plated Phosphor Bronze
19	Max Nut	Tin Plated Brass
20	Seal (threaded)	Ledloy “A”
24	Coil Wire	Annealed Copper

FIGURE 14-1. Typical ferrite bead EMI filter.

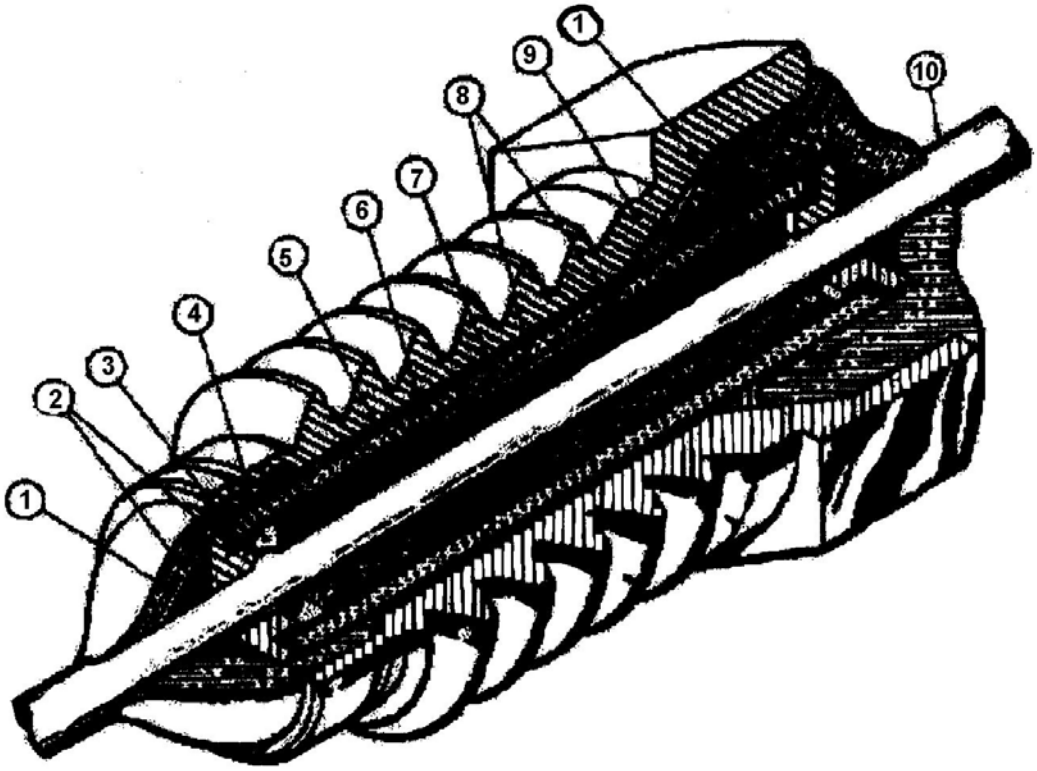

ITEM	ITEM NAME	MATERIALS OF CONSTRUCTION
1	Potting	Proprietary
2	Solder	60 percent Sn, 38 percent Pb, 2 percent Ag
3	Clip	Silver plated free machining Brass
4	Void	
5		Conductive Silver Epoxy
6	Ceramic	Doped Barium Titinate
7	Ferrite Bead	Ni/Zn Ferrite
8	Electrode	Silver parts, 95 percent Silver in a frit mixture
9	Bushing	Silver plated C12L15 Carbon Steel or free machining Brass
10	Terminal	Silver Plated 1/2 hard Copper Wire

FIGURE 14-2. Typical "P" section EMI filter.

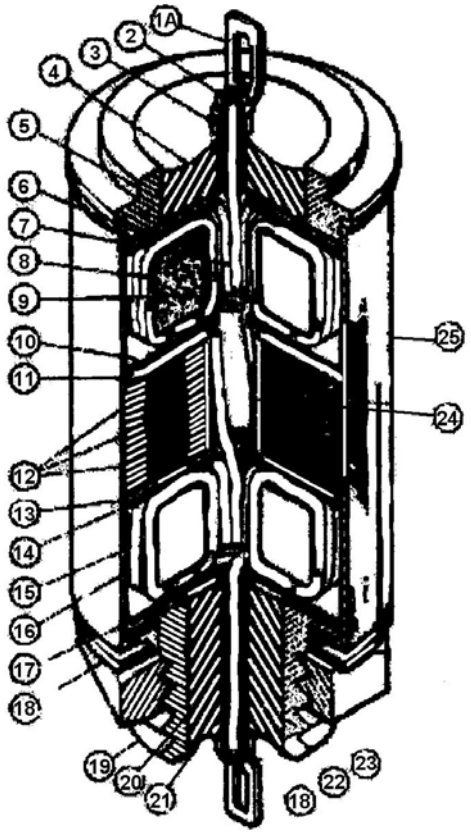

ITEM	ITEM NAME	MATERIALS OF CONSTRUCTION
1	Flag Terminal	Alloy 52
2, 22	Solder	20 percent Sn, 77 percent pb, 3 percent Ag
3, 21	Terminal Extension	Alloy 52
4, 20	Seal	Glass
5	Outer Flange	Cold Rolled Steel No. 1113
14, 6		
10, 17	Washer	Mica
7, 23	Coil Wire	Annealed Copper
8, 15	Core Costing	Enamel
9, 16	Core	MPP-112 Moly-Permalite
11, 13	Split Ring	Tin Plated Brass
12	Capacitor	Ceramic Capacitor (Proprietary composition)
18	Lockwasher	Tin Plated Phosphor Bronze
19	Seal (threaded)	Ledloy ”A“
23	Can	Ledloy “A”

FIGURE 14-3. Typical "T" section EMI filter.

14.1.2 Data records. DPA findings that deviate from the specified configurations or other requirements shall be documented as defects.

14.1.3 Evaluation criteria. When the DPA is being conducted as a lot conformance test, the associated production lot shall be rejected if one or more of the DPA sample parts exhibit any of the defects listed below (as applicable to the type of part being examined).

a. Seal leakage in excess of specification requirements.

b. Cracks or chips on the glass seal that are not polishing artifacts.

c. Voids in potting that permit movement of internal components or that exceed specification requirements.

d. Cracks or voids in ceramic capacitors that exceed the requirements described in 10.1 herein.

e. There shall be no solder balls or other foreign material lodged internally.

f. Ceramic discoidal capacitors that do not have a minimum of 240 degrees of their circumferential surface area soldered or silver epoxy attached uniformly to the inner surface of the case, as can be seen on the X-ray negatives, or in cross-section.

g. Misalignment of the capacitive or inductive element with the case that is greater than 10 degrees.

h. Solder used for internal connections does not meet the melting temperature requirements of the procurement specification.

i. Any cracked or cold solder connection, internally or externally.

j. For filters with wound inductors, the wire and core used do not meet the requirements of the procurement specification.

k. Inductor cores that are chipped or cracked; also inductor wire that is broken, nicked, necked down, or does not meet specification requirements, including cracked or broken ferrite elements.

l. Wiring junction splices, if any, do not have joint integrity and insulation.

m. Egress of leads through the eyelet or tubulet not soldered for a minimum of 50 percent of the tube length, or the solder is cracked away from the inside of the eyelet or from the wire.

n. External tab terminals not coated in accordance with the procurement specification.

o. Inductor wire not insulated from the case and the core.

p. Resin filler shows separation from the case or from the lead wires.

q. Any defect that reduces part reliability.

r. Less than 20 percent (average both sides of feedthrough) solder or silver epoxy attach of the capacitor feedthrough conductor to the capacitor in cross-section.

s. No stress relief on inductor wire, especially when combined with silicone-type filler.

t. Presence of pure tin (Pure tin defined as less than 3 percent alloy element).

u. Excessive flux residue. Flux residue bridging the opposing polarity is not acceptable.

REQUIREMENT 15

DETAILED REQUIREMENTS FOR MAGNETIC DEVICES (INDUCTORS, TRANSFORMERS, AND COILS)

15. General. This section describes detailed requirements for a DPA of commonly used inductors, transformers, and coils (MIL-PRF-27, MIL-PRF-15305, MIL-PRF-21038, MIL-PRF-39010, MIL-PRF-83446). These requirements supplement the general requirements in section 4 and are based upon the requirements of MIL-STD-981. Examples of typical configuration sketches are included. When applicable, specification numbers or types are referenced to assist in identification. Pre-DPA tests, such as functional tests and solderability tests, are assumed to have been satisfied by normal inspection and testing and are therefore not addressed.

15.1 Magnetic devices, inductors, and transformers (MIL-STD-981). Typical devices are shown on figures 15-1 and 15-2.

15.1. Method.

15.1.1.1 External visual. Perform visual inspection at 20X minimum magnification on all parts. Check for defects in leads, header, feed-through, and seal. Examine leads, surfaces, markings configuration, and dimensions. One photograph of one typical device showing all external markings shall be taken.

15.1.1.2 Hermeticity. Verify hermetic seal in accordance with the requirements of the part specification.

15.1.1.3 Radiographic inspection. Radiographs shall be taken of each device in each of three axes in accordance with appendix C of MIL-STD-981, unless radiographs that meet the product assurance program requirements of MIL-STD-981 are available from group A testing. The radiographic examination shall include, but not be limited to, inspection for foreign or extraneous materials, alignment, dimensions and clearances, configuration, and processing damage (ie. shrinkage cracks). Accept/reject criteria shall be in accordance with Appendix C in MIL-STD-981.

15.1.1.4 Disassembly. During the process of opening the enclosure, care must be exercised to assure external liquid, gaseous, particulate, or other contamination types do not enter the interior areas. All metal-cased inductors and transformers shall be decapped with a special can opener device. Do not unsolder devices as part of sample preparation. Half of the inductors or transformers (round up) shall be mechanically delidded or fully immersed in a suitable stripping solution to remove the encapsulating material as applicable. The stripping solution may be used either hot or cold, as applicable, provided that it does not damage the internal structure. When possible, remove encapsulation material in two steps. First expose terminations at the terminal leads or terminals; secondly, expose the terminations of the wound wire (magnet wire) to the interconnect lead (terminal lead). Carefully remove device from the potting cup and examine terminations, if any. Remove insulating cushion material from coil. Examine wire for nicks, scratches, etc., and examine internal solder joints.

15.1.1.5 Cross-sectioning. Encapsulate the remaining half of the devices in epoxy and cross-section in planes that will reveal the most useful data (typical terminal solder joints and core winding). Refer to radiographs for detail.

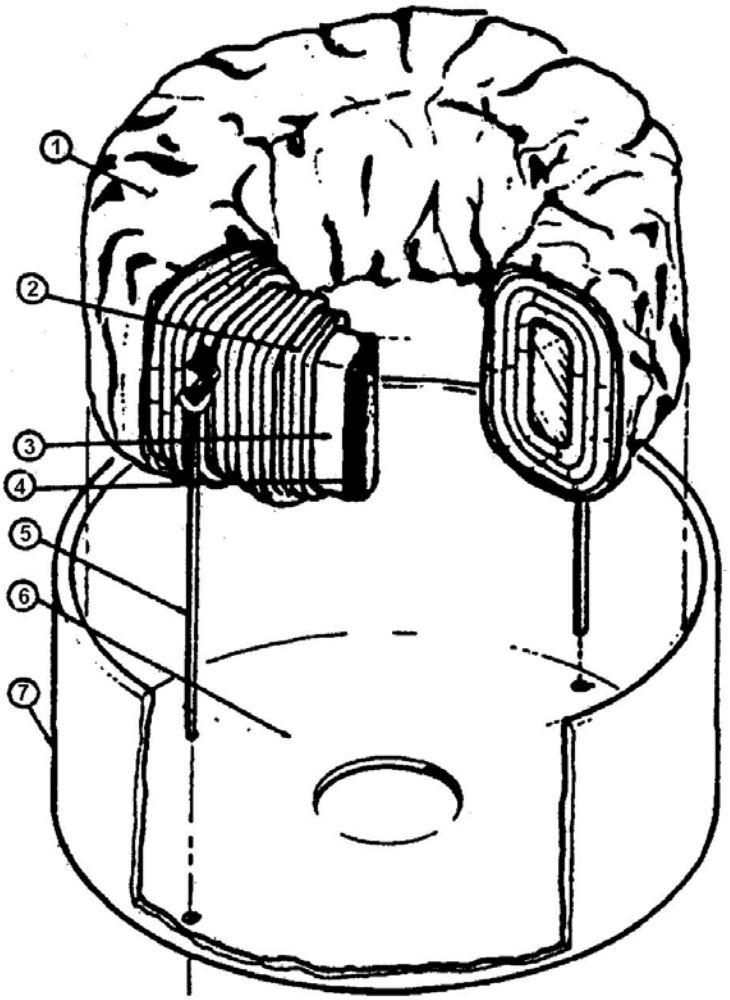

1	Cushion Material (uncurred teflon)	5	Interconnect and lead wire
2	Magnet wire	6	Potting level
3	Core insulation	7	Potting cup (epoxy)
4	Core		

FIGURE 15-1. Inductor, power (typical).

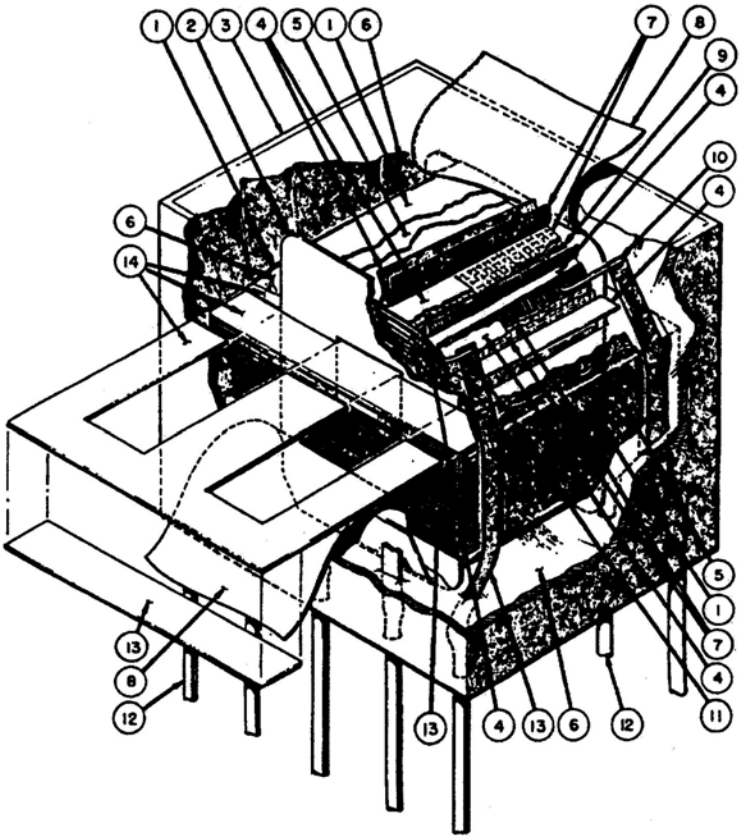

1, 7, 8	Tape
2	Bobbin
3	Plastic case
5	Interlayer insulation
4,5	Potting material
6	Magnet wire
9	Interconnect/Wire weld
10, 11	Terminal lead
12	E-1 laminations
13, 14	E-1 laminations

FIGURE 15-2. Transformer (typical).

15.1.2 Data records. DPA findings that deviate from the specified configuration or other requirements or exhibit anomalies shall be documented as defects.

15.1.3 Visual examination. All exposed inner surfaces of each inductor shall be examined for the following characteristics at a minimum magnification of 30X (see figure 15-1 and 15-2). When the DPA is being conducted as a lot conformance test, the associated production lot shall be rejected if one or more of the DPA samples exhibit any of the following anomalies:

a. Wire size not in accordance with MIL-STD-981 and applicable specification or drawing.

b. Interconnect ribbon not in accordance with applicable specification or drawing.

c. Internal wire leads attached only by soldering with no evidence of mechanical anchoring.

d. Wire windings that cross over other turns in going from one wound segment to adjacent segment.

e. Nicks, kinks, reduction in wire cross-section, or evidence of other wire damage.

f. Evidence of flux or other types of residues.

g. Teflon tape.

h. Charred, crushed, discolored, or damaged wire insulation.

i. Repaired or spliced coil wire.

j. Wire-to-lead termination connections that do not show a sufficient stress relief loop.

k. Cold solder joints, or solder joints with no fillet around wire or termination.

l. No evidence of weld tip indentation in welded joints.

m. Cracks in welded joints.

n. Loose or splattered weld.

o. Lack of three full non-overlapping wraps of wire at each post termination.

p. Stranded conductor wire at terminations that does not show pre-tinning or that shows large globules of solder that obscure the wire contour, or wire swelling due to excess wicking.

q. Coils or other electronic components that show evidence of overheating.

r. Fractures, cracks, or pinholes in solder joint.

s. Solder joints with sharp tips or peaks or with a protruding, bare wire-end or bare strands of a conductor.

t. Foreign or extraneous matter embedded in or adherent to wire joints, between windings, or cores.

u. Thin impregnation <.005 inch.

15.2 Magnetic devices, RF coils. Typical devices are shown on figure 15-3.

15.2.1 Method.

15.2.1.1 External visual. Record all marking and identification that appears on the coil and its container and inspect for configuration compliance. Visually inspect each part at 20X minimum magnification for cracks, pinholes, or chips in the case material. Inspect the leads for evidence of physical damage (cuts, nicks, crushing), corrosion, or exposure of the base metal.

15.2.1.2 Terminal strength. Perform a lead pull strength test on two devices in accordance with the applicable specification requirements.

15.2.1.3 Decapsulation. Strip coating or case from one half of the number of samples in accordance with 15.1.1.4.

15.2.1.4 Coil examination. Examine depotted coil under 20X minimum magnification. Care shall be exercised when viewing the area where the magnet wire leaves the bobbin and goes to the solder joint at the lead wire.

15.2.1.5 Sectioning samples. Cast remaining half of samples in a suitable encapsulation media selected in accordance with EIA-469 and cross-section in a plane perpendicular to the lead plane to permit evaluation of material, internal design, construction, and workmanship. Extreme attention shall be paid to the area where the lead wire exits from the encapsulant.

15.2.2 Data records. DPA findings that deviate from the specified configuration or other requirements or exhibit anomalies shall be documented as defects.

15.2.2.1 Evaluation criteria. When the DPA is being conducted as a lot conformance test, the associated production lot shall be rejected if one or more of the DPA sample parts exhibit any of the defects listed below. Each defect shall be described and photographed for inclusion in the DPA report.

15.2.2.2 Visual examination. All inner surfaces of each coil shall be examined for the characteristics given in 15.1.3 herein, at a minimum magnification of 30X.

a. Evidence of contamination, including flux and cleansing agents.

b. Evidence of poor solder connection (no solder fillet or dewetting around wire or ribbon)

c. Evidence of loose, cracked, or cold solder, or voids in the solder.

d. Inadequate stress relief, bend or kink in wire, or improper interconnect wire to external lead (i.e., wire under tension).

e. Nicks or reduction in wire diameter greater than 25 percent along the length of the wire and at the solder joint.

f. Bobbin with cracks, chips, voids, discoloration, or distortion.

g. Evidence of unprotected magnet wire or splicing of the wire.

h. Evidence of poor winding on the bobbin or crossed wire turns.

i. Improper shielding connections (if applicable).

j. Wire size not in accordance with applicable procurement specification.

k. No evidence of weld tip indentation on welded terminations.

1. Interconnect and lead wire
2. Solder
3. Encapsulant (Potting Material)
4. Coil Wire
5. Core
6. Adhesive (lead to core joint)

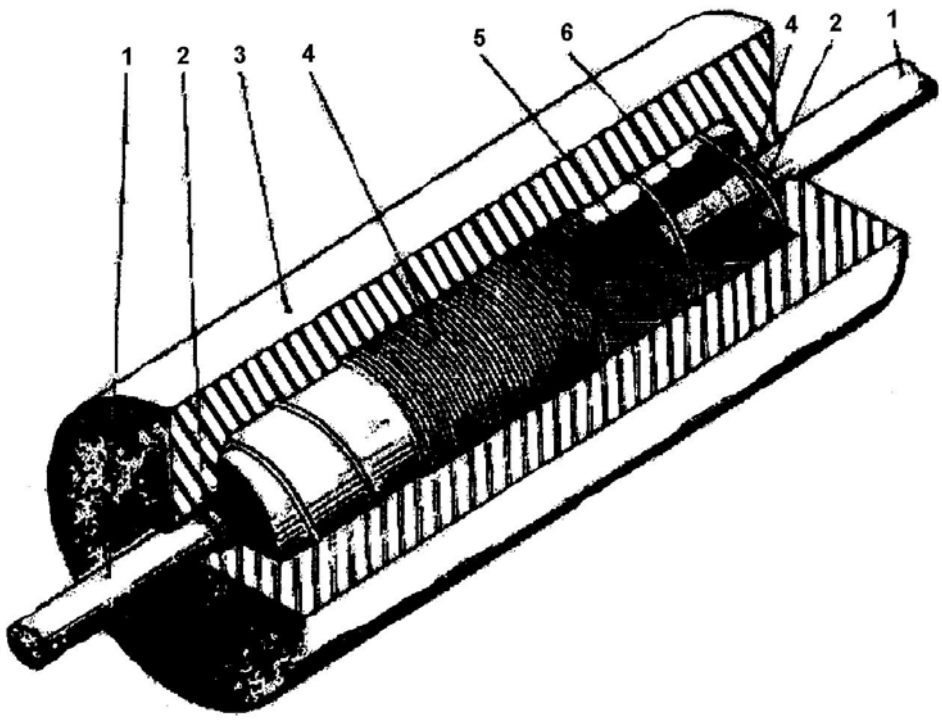

FIGURE 15-3. RF coil (typical).

REQUIREMENT 16

DETAILED REQUIREMENTS FOR MICROCIRCUITS
(MONOLITHIC, HYBRID, OPTOCOUPLER, AND MULTICHIP MODULE)

16. General. This section describes detailed requirements for a DPA of commonly used microcircuits. These requirements supplement the general requirements in section 4. When applicable, specification numbers or types are referenced to assist in identification. Pre-DPA tests such as functional tests and solderability tests are assumed to have been satisfied by normal inspection and testing and are therefore not addressed.

16.1 Microcircuits, hermetic (MIL-PRF-38534 and MIL-PRF-38535, monolithic, multichip, and hybrids). Configuration photographs and drawings or diagrams as supplied by the manufacturer.

16.1.1 Method. DPA examination shall be performed in accordance with method 5009 of MIL-STD-883, as modified.

16.1.1.1 External visual examination. Perform this examination in accordance with method 2009 of MIL-STD-883, on all samples.

16.1.1.2 Hermeticity testing. Perform both fine and gross leak testing in accordance with method 1014 of MIL-STD-883.

16.1.1.3 Radiographic examination. Perform radiographic examination on all samples in accordance with method 2012 of MIL-STD-883.

16.1.1.4 Particle impact noise detection (PIND). Perform PIND testing on all samples in accordance with method 2020 of MIL-STD-883, condition A.

16.1.1.5 Internal water vapor testing/residual gas analysis (RGA). Perform internal water vapor /RGA testing in accordance with method 1018 of MIL-STD-883. The sample size for this testing will be one for QPL/QML devices and three for non-QPL devices with zero failures or five devices with a maximum of one failure (3/0, 5/1). It is preferred that additional devices over and above the DPA sample lot be provided for this test to allow for processing in parallel to the DPA once hermeticity testing has been completed. If this cannot be done due to cost or availability issues, care should be taken to ensure that a minimal amount of damage results to the internal structures of the device during this test. Any damage caused by the intrusion of the puncturing tool into the cavity(s) of the device(s) shall be noted as such.

16.1.1.6 Internal visual examination. This examination shall be performed on all samples in accordance with method 2010 of MIL-STD-883, condition as applicable, for monolithic devices. Methods 2017 and 2032 of MIL-STD-883 are applicable for hybrid microcircuits. Care should be taken during the delidding process to ensure minimal damage is introduced to the device bond wires or die surfaces. Any damage to the device induced during delidding or subsequent handling shall be noted. All anomalous conditions shall have an image(s) recorded, which clearly detail the condition(s) noted.

16.1.1.7 Bond pull testing. This testing shall be performed on two samples minimum in accordance with method 2011 of MIL-STD-883, condition D. In the event an anomalous condition is noted during bond pull testing, SEM shall be utilized to examine the failed interface(s) and appropriate images recorded.

16.1.1.8 SEM. SEM examination shall be performed to verify metallization step coverage in addition to documenting anomalous conditions noted in the previous portion of the DPA. The step coverage evaluation will be performed on two monolithic devices or one for hybrid devices. All expanded metallization discrete semiconductor dice within a hybrid shall be inspected. The evaluation will be performed in accordance with method 2018 of MIL-STD-883, except for the following clarifications that take precedence:

a. The scope of the evaluation will be focused on verifying the step coverage of the primary conducting layers of metallization only. Barrier layer(s), if present, shall count towards the requirement for metallization coverage for the particular metal layer under examination unless otherwise specified by the customer. A separate evaluation of the barrier layer step coverage or contact coverage will not be required during the course of the DPA.

b. The glassivation removal process of multilayer metal devices may be accomplished in a single step if no damage will occur to the metallization, which would alter the validity of the examination (i.e. corrosion of the metal). Otherwise, successive deglassivation procedures/steps shall be performed to allow for examination of each metal layer independently. Care must be taken to ensure that all glassivation has been removed from via or contact structures to prevent obscuring the step coverage inspection.

c. In the event a metal layer completely obscures an underlying metal layer such that metallization inspection of at least 10 percent of the lower layer metal can not be performed, the obscuring layer of metallization shall be removed chemically following its inspection.

16.1.1.9 Die shear testing for Monolithics. Die shear strength testing of all semiconductor dice will be performed on 50 percent (round down) or a minimum of two for monolithic microcircuits, whichever is greater, of the DPA samples in accordance with method 2019 of MIL-STD-883. All samples exhibiting anomalous conditions shall have images recorded of the die attachment remains at the shear location. The sample size shall be two (2) for monolithic microcircuits, one for hybrids and MCMs with all the active elements inside hybrids/MCMs to be examined.

16.1.1.10 Passive element shear sampling plan. All passive elements (non-semiconductor dice) within 50 percent (round down) of the devices (large magnetic and stacked capacitor elements excluded) will be shear tested in accordance with method 2019 of MIL-STD-883, except as noted below.

a. The acceptance criteria will be that found in method 2019.

b. The shear force will be applied as stated in method 2019, in a plane perpendicular to the longest axis of the passive element. The attachment area will be defined by measuring the actual possible area of attachment to a device as practical for its design, for example: a ceramic chip capacitor is typically attached by its end metallization areas. The attachment area would be determined by measuring one of those two end metal areas optically from an incident angle. This value would then be multiplied by two to obtain the attachment area prior to testing. Non-conductive staking material beneath the capacitor body will not be measured as it is commonly used to ensure adequate mechanical support but is not typically required for electrical attachment purposes. If any element has been intentionally attached by its bottom surface area, then that area will be considered the attachment area for the purposes of this evaluation.

c. The elements will be sheared to separation as practical from the substrate in order to provide more quantitative results useful in further evaluations and assessments of the device.

d. Care shall be taken to ensure that all previously noted anomalous conditions have been resolved prior to shear testing and destruction of the evidence.

16.2 Optocouplers.

16.2.1 Method. Optocouplers shall be tested as a hybrid in accordance with 16.1 herein. Care shall be taken during any surface coating removal process to prevent damage to the dice, bond wires, or die attachment.

16.3 Crystal oscillators.

16.3.1 Method. Crystal oscillators shall be tested as a hybrid in accordance with 16.1 herein. The quartz crystal and its mounting will be evaluated using the criteria of requirement 12 herein. Removal of the crystal is required for a thorough inspection of the package interior.

16.4 Multichip modules.

16.4.1. Method. Multichip modules shall be tested as hybrids in accordance with 16.1 herein. This inspection must be performed in two stages. Delid, internal visual, bond pull, SEM, and die shear must be performed on the discrete leadless chip carrier (LCC) components on one side of the assembly prior to delid and inspection of the LCC on the other side of the substrate if present. Subsequent DPA inspection is then performed on the second side of the device. This ensures that no damage will occur to the internal members of the LCC on the side not under test.

The sampling requirement for SEM inspection may be reduced to one assembly (all dice) if traceability (same part number/lot date code) for the subassembly LCC exists from the device to device.

16.5 Plastic encapsulated microcircuits.

16.5.1 Method.

16.5.1.1 External visual examination. Inspect each sample at 3X to 10X magnification. One photograph of one typical device showing all marking shall be taken. Failure criteria of method 2009 of MIL-STD-883, "external visual", are applicable except:

a. General criteria for presence of any secondary coating material that obscures a seal area.

b. Foreign/displaced material requirement for braze material flow, or other foreign material.

c. Construction defects.

d. Package body/lid finish.

e. Lead requirement for misalignment to the braze pad.

f. Lead requirement for braze material that increases the lead dimensions.

g. Package body/lid - leaded devices requirement for any chipout dimensions.

h. Package body/lid - leadless devices.

i. Glass seals.

16.5.1.1.1 Additional criteria. Additionally, look for:

a. Package non-planarity, warping, or bowing.

b. Foreign inclusions in the package, voids and cracks in the plastic encapsulant.

c. Deformed leads.

16.5.1.2 Radiographic examination. Radiographs shall be taken of each device in two views 90 degrees apart (top and side views), in accordance with method 2012 of MIL-STD-883. The purpose of this examination is to find the die and wire placement for future de-capsulation and to detect internal defects of the package. Look for the following defects:

a. Foreign objects, voids, and filler conglomerates in the encapsulant.

b. Voids in the die attach material.

c. Misaligned leads.

d. Burrs on lead frame (inside the package).

e. Poor wire bond geometry (wires that deviate from a straight line from bond to external lead or have no arc and make a straight line run from die bonding pad to lead).

f. Swept or broken wires.

g. Improper die placement.

16.5.1.3 Acoustic microscopy. All samples shall be subjected to the acoustic micro imaging analysis. The purpose of this examination is to nondestructively detect the following defects:

a. De-lamination of the molding compound from the lead frame, die, or paddle.

b. Voids and cracks in molding compound.

c. Unbonded regions and voids in the die-attach material (if possible).

The apparatus and materials for this test shall include: 1) An ultrasonic imaging equipment based on reflection (pulse echo) technology in which a single focused acoustic lens mechanically scans a tiny dot of ultrasound through the sample. A reflection is generated at each interface and returned to the sending transducer for processing and image generating. Signal processing shall allow information to be gathered from multiple levels within the sample. A C-Mode Scanning Acoustic Microscope (C-SAM) can be used for this purpose; 2) De-ionized water shall be used as a medium fluid to provide acoustic coupling between the sample and the transducer.

16.5.1.3.1 Examination sites. Examination of the package for voids, cracks, and de-laminations shall be performed on each sample at six areas:

a. Interface between the die and molding compound.

b. Interface between the lead frame and molding compound (top view).

c. Interface between the paddle periphery and molding compound (top view).

d. Die-to-paddle attachment interface (if not possible). This can be evaluated using through-transmission scanning.

e. Interface between the paddle and molding compound (back view).

f. Interface between the lead frame and molding compound (back view).

NOTE:· Combined C-mode scans can be performed to investigate more than one area during one scanning run. Die-attach inspection shall be performed in accordance with method 2030 of MIL-STD 883, “ultrasonic inspection of die attach” for the parts with the die mounted onto a substrate or heat sink. This standard can also be applicable for other package types provided the resolution is adequate to detect voids in the attachment material.

16.5.1.3.2 Evaluation criteria. In the device examination, the following aspects shall be considered as unacceptable and devices which exhibit any of the following defects shall be rejected:

a. Cracks in plastic package intersecting bond wires.

b. Internal cracks extending from any lead finger to any other internal feature (lead finger, chip, die attach paddle) if crack length is more than a half of the corresponding distance.

c. Any crack in the package breaking the surface.

d. Any void in molding compound crossing wire bond.

e. Any measurable amount of de-lamination between plastic and die.

f. De-lamination of more than half of the backside of the die paddle/plastic interface.

g. Complete lead-finger de-lamination from the plastic (either top or backside).

h. Delamination of the lead-finger that includes the wirebound area.

i. Delamination of the top tie bar area for more than half of its length.

NOTE: If rejectable internal cracks or de-laminations are suspected, a polished cross section may be required to verify the suspected site.

16.5.1.4 Cross-sectioning test. Cross-sectioning will be performed on one intact device for the purpose of inspecting typical die and post bond interfaces as well as die attach quality. If acoustic microscopy has revealed discrepancies/de-laminations in the die attach, plastic to die interface, or other significant interfaces, this sample should be utilized for sectioning. An attempt should be made to section into the discrepant area as a means of providing additional verification and information concerning the defect. Precision metallographic techniques shall be utilized which will result in high quality results without the introduction of damage to the device. The data to be obtained from this inspection will be qualitative in nature and is intended to determine general bonding quality. Excessive/inadequate intermetallic bond formation shall be identified and reviewed for acceptability.

16.5.1.5 De-capsulation. The purpose of this section is to provide guidelines for possible de-capsulation methods for failure analysis (FA) and DPA of plastic encapsulated semiconductor devices. It is also intended to characterize advantages and disadvantages and indicate possible pitfalls.

16.5.1.5.1 Preliminary steps. X-ray analysis should be performed before de-capsulation to learn die shape, placement and size; and to determine the height of the bond wires. This information will assist in choosing the correct mask or gasket and/or depth of the trench to be milled in the package surface. The samples may be baked before wet de-capsulation.
This step is intended to remove all moisture from the package so that damage will not occur due to acidic corrosion of the metallization.

CAUTIONS:· 1) Results of subsequent examinations depend heavily on de-capsulation quality. Detailed records about de-capsulation process irregularities and possible artifacts should be maintained. 2)· Do not expose wire bonds at the lead frame when using wet etching techniques. These bonds are frequently made to silver plated areas and chemical etchants will quickly degrade them.

16.5.1.5.2 Milling. This step is not necessary but is often useful for manual wet etching and plasma etching. Milling prevents the leads from breaking off by ensuring that the chip surface is exposed before the lead frame, and reduces the time required for etching. Any suitable milling machine is acceptable; use of a dental drill to create a small impression is possible but not preferable because a flat surface would not result. The procedure is as follows;

a. Using X-ray data, calculate the depth of the trench to be milled.

b. Install the part into the fixture of a milling machine. The surface being worked should be parallel with the milling plane.

c. Start milling, moving the mill tip down to the calculated depth. Mill the trench slightly longer and wider than the die.

To ensure that the bond wires remain intact during milling, it is recommended that approximately 0.2 mm (.008 inch) of plastic be allowed to remain covering them.

16.5.1.5.3 Suggested techniques.

16.5.1.5.3.1 Manual wet etching. Advantage: A quick result is possible with readily available equipment. Disadvantage: Removal of contamination from the surface of the die preventing chemical analysis; the method requires very careful attention to safety.

a. Apparatus and materials:

(1) A heating plate, metal block, beaker, aluminum weighing dish, and disposable dropper.

(2) Red fuming nitric or sulfuric acid can be used as etchants. Acetone, isopropanol, or methanol can be used for rinsing.

b. Notices:

(1) Red fuming nitric acid can be used in most cases. Sulfuric acid can be used as a solvent specific to anhydride epoxies.

(2) Red fuming nitric acid has little effect on plastic at room temperature, but elevating the temperature to approximately 100°C will cause it to de-capsulate a device in few minutes. Higher temperatures will only decompose the acid. When heated in an open beaker, the acid will evaporate NO2 and absorb moisture with time, thus becoming diluted and converted into yellow nitric acid. Dilute (yellow) nitric acid is not suitable for de-capsulation purposes because it reacts with the metal in the devices.

(3) To have an effect on epoxy, sulfuric acid must be heated to about 150°C. Use de-ionized water for rinsing.

c. Procedure:

(1) Mill a trench or create a small impression, according to section 16.5.1.5.2.

(2) Make a mask using aluminum foil adhesive tape shielding the specific areas not to be etched.

(3) Install the part on a metal (copper or aluminum) block to provide heat directly to the bottom of the device. Then place it in an aluminum weighing dish on a plate heated to approximately 90°C and wait several minutes to allow the package to heat up.

(4) Pour a small quantity of red fuming nitric acid into a beaker and apply several drops to the device with the dropper.

(5) Cleanup: Rinse with cold nitric acid for a few seconds, rinse in a spray of acetone, then in isopropanol or ultrasonically clean in methanol. Blow with dry air.

(6) Repeat above steps 3 through 5 until the die is exposed.

(7) If necessary, perform a plasma cleanup with a 10:1 mixture of 02:CF4 in a barrel plasma (50W, 30-60 minutes).

d. Cautions:

(1) It is very important to keep the part hot and the exposure time very short for reaction with acid.

(2) There are safety hazards with this process. All safety procedures should be invoked.

16.5.1.5.3.2 Wet chemical jet etching. This method eliminates some safety problems inherent to manual wet etching and provides quick, clean, and localized removal of encapsulant in the die area, usually with no damage to the part.

a. Apparatus and materials:

(1) Jet etcher (e.g., B&G de-capsulator, model 250).

(2) Red fuming nitric or sulfuric acid, acetone, isopropanol.

b. Notices:

(1) Red fuming nitric acid can be used in most cases. Sulfuric acid can be used as a solvent specific to anhydride epoxies.

(2) Red fuming nitric acid has little effect on plastic at room temperature, but elevating the temperature to approximately 100°C will cause it to de-capsulate a device in few minutes. Higher temperatures will only decompose the acid. When heated in an open beaker, the acid will evaporate NO2 and absorb moisture with time, thus becoming diluted and converted into yellow nitric acid. Dilute (yellow) nitric acid is not suitable for de-capsulation purposes because it reacts with the metal in the devices.

(3) To have an effect on epoxy, sulfuric acid must be heated to about 150°C. Use de-ionized water for rinsing.

(4) De-capsulation of the first part may require from 3 to 6 steps followed by low power optical examination. After the process regimen is readjusted, de-capsulation can be done in one - two steps (three to five minutes).

c. Procedure:

(1) Choose a gasket according to the die size, calculated by X-ray data.

(2) Adjust the part and the gasket onto the fixture.

(3) Set parameters of the process (etching temperature, etching time, and volume of etching acid) using manufacturer's data and experience and perform de-capsulation.

(4) Rinse the part in acetone and then in isopropanol after each step of etching. Blow with dry air.

(5) If necessary, perform a plasma cleanup with a 10:1 mixture of 02:CF4 in a barrel plasma (50W, 30 to60 minutes).

d. Caution: De-capsulation of thick packages with relatively small surface areas (like DIP-8) may result in a cavity wall depression that halts the etching process. To avoid this, use gaskets of a lesser size.

16.5.1.5.3.3 Plasma etching. Plasma etching has very high selectivity (the technique minimizes etching of the die metals and lead frame). Safety and contamination problems of wet chemical processes are avoided. Plasma treatment is a gentle process compared to wet etching and sometimes makes it possible to expose bonds at both ends of the wires. The disadvantage is that significantly more time is required.

a. Apparatus and materials: A non-reactive ion etching mode plasma system should be used, for example, Plasma GIGA-ETCH 100-E system (Technics Plasma GmbH). In this system, the plastic molding compound is removed from the device automatically and up to 12 devices can be treated simultaneously. The filler material (quartz powder) is automatically blown from the surface with brief blasts of compressed air in time intervals of several minutes. De-processing is performed at approximately 0.5 - 1 mbar pressure of the gas mixture O2:CF4 (80:20).

b. Notice: The process time varies typically between 5 and 15 hours depending upon the type of the device and the trench depth.

c. Procedure:

(1) Mill a trench according to section 16.5.1.5.2.

(2) If necessary, cover the package with an aluminum foil mask so only the area to be etched is exposed to the plasma.

(3) Adjust and secure samples under the blow nozzles and start the process.

d. Caution: Oxygen/freon plasma (mostly used for de-processing) does not affect Al and Au, but can attack other metals and glassivation (especially Si3N4).

16.5.1.6 Internal visual inspection. All de-capsulated samples shall be subjected to this examination. The purpose of this test is to verify that the quality of the performed de-capsulation is adequate for further analysis, to examine de-capsulated device for visual defects, and to identify those damaged by de-capsulation. The device shall be examined microscopically first at a low power (30X to 60X) magnification and then at a high power magnification (75X to 200X) to determine the existence of defects as described in 16.5.1.6.1 and 16.5.1.6.2. All failures from 16.5.1.3.2 should be analyzed to confirm that the failure mechanism occurrence is not due to the de-capsulation technique.

16.5.1.6.1 Verification of the de-capsulation quality.

a. Confirm acceptance of the specimen for further bonding examination. At least 25 percent, or three wire bonds, whichever is greater, should meet the following criteria: Be clean, have no damage, and be exposed more than approximately two-thirds of their length.

b. Confirm acceptance of the specimen for further glassivation integrity and SEM examinations. At least 75 percent of the die area should be clean and have no damage caused by de-processing.

c. Record any artifacts, which may have affected the DPA results.

16.5.1.6.2 Criteria. Evaluation criteria in accordance with method 2010 of MIL-STD-883, and method 2013 of MIL-STD-883, “internal visual inspection for DPA" are applicable. Additionally, no device shall be acceptable that exhibits the following defects:

a. Foreign intrusions in exposed plastic material.

b. Glassivation pinholes, peeling or cracks (in particular those specific to filler particle-induced damage).

c. Metallization voids, corrosion, peeling, or lifting.

16.5.1.7 Glassivation layer integrity. One sample, or 20 percent of the lot, whichever is greater, which met the requirements in accordance with 16.5.1.6.1.b shall be subjected to a glassivation layer integrity test. This examination shall be performed in accordance with method 2021 of MIL-STD-883, “glassivation layer integrity".

16.5.1.8 Bond pull test. At the discretion of the user, each sample that met the requirements in accordance with 16.5.1.6.1.a shall be subjected to a destructive bond pull test. The wire bonds shall be pulled to destruction according to method 2011 of MIL-STD-883, condition D, “bond strength (destructive bond pull test)”. The results shall be used for engineering insight only and should be recorded for information only, not as a part of the record reflecting conformance or non-conformance to the requirements of this standard.

16.5.1.9 SEM examination. Two samples minimum, except those that were subjected to glassivation integrity examination, that meet the requirements in accordance with 16.5.1.6.1.b shall be subjected to this test. The purpose of this examination is to evaluate quality of the die interconnect metallization. The two samples shall undergo SEM inspection for metallization step coverage. The subsequent examination shall be performed in accordance with method 2018 of MIL-STD-883, and 16.1.1.8 herein. It is important to remove all polymer residues from the die if cross sectioning is found to be necessary. Otherwise, the acid absorbed in the polymer remnants would mix with de-ionized water (during polishing) and cause corrosion of the aluminum metallization.

REQUIREMENT 17

DETAILED REQUIREMENTS FOR RELAYS

17. General. This section describes detailed requirements for a DPA of commonly used relays. These requirements supplement the general requirements in section 4. Examples of typical configuration sketches are included. When applicable, specification numbers or types are referenced to assist in identification. Pre-DPA tests, such as functional tests and solderability tests, are assumed to have been satisfied by normal inspection and testing and are therefore not addressed.

17.1 Relays (MIL-PRF-6106, MIL-PRF-39016 and MIL-PRF-83536).

17.1.1 Method.

17.1.1.1 External examination. Examinations shall be performed using a microscope with 10X magnification, except when an abnormality is suspected and then 30X magnification (maximum) may be used to verify product integrity on the following:

a. Header glass seals. The glass seals of the header shall be in compliance with MIL-H-28719.

b. Protective finish and plating.

(1) There shall be no unplated areas or discontinuities of protective finishes.

(2) The finish shall be smooth and free from chips, blisters, or rough spots.

(3) There shall be no evidence of plating flaking off.

(4) There shall be no evidence of chipping, peeling, or blistering of the finish.

(5) There shall be no evidence of inadequate protection against corrosion.

(6) The case shall be free from distortion and dents.

(7) The case and terminal plating shall not be pure tin, cadmium, or zinc (<3 percent alloyed with other elements) as determined by SEM EDS.

c. Part marking. Part marking shall be in accordance with MIL-STD-1285.

d. Terminals, studs, and mounting.

(1) There shall be no bent or broken terminals.

(2) Relay terminals shall be in accordance with the detailed specification, and shall be free from burrs and malformations.

(3) Screw threads, tapped holes, and threaded inserts shall be of the size shown on the detailed specification, and shall be in accordance with FED-STD-H28, unless otherwise specified. No malformed threads shall be accepted. A minimum of three full threads of engagement shall be provided.

(4) Clearance holes and hardware such as nuts, washers, etc. shall be of the size shown on the detailed specification, and shall be free of burrs and malformations.

(5) Studs, flanges, brackets, etc. shall be securely fastened to the relay case.

17.1.1.2 Hermeticity testing. Perform testing on one sample in accordance with MIL-PRF-6106. The one sample is for reference only.

17.1.1.3 Internal water vapor testing/residual gas analysis (RGA). One relay shall be submitted for residual gas analysis (RGA) to a laboratory approved by the qualifying activity of the detail specification. The one sample is for reference only.

17.1.1.4 Radiographic examination. Suitable reference radiographs shall be taken to ensure proper device opening procedures will be utilized.

17.1.1.5 Suggested opening. CAUTION: The introduction of foreign particles during opening can result in unacceptable conditions during the inspection of 17.1.1.6. To avoid damage or deformation of the relay, the use of holding devices such as wire, clamps, or pliers is prohibited. Remove all adjunct sealants from relay headers prior to opening.

17.1.1.5.1 TO-5 type enclosures. Diagonal cutters may be used to minimize the possibility of the introduction of metal flakes inside the device. Alternatively, a can opener device designed specifically for the purpose of opening the TO-5 type enclosures can be used. The adjustment of pressure between the cutting wheel edge and the TO-5 enclosure should be set for the minimum required to allow cutting without deformation of TO-5 enclosure.

17.1.1.5.2 Rectangular type enclosure - method 1.

a. Securely mount the relay in a vice-like fixture. The fixture should not deform the relay nor disturb internal dimensions and settings, which may require measurement in latter parts of the DPA.

b. Orient the relay so that the header-to-can weld can be end-milled. This may be done as shown on figure 17-1.

c. Both the height and depth of the material to be end-milled away must be closely controlled. This may be done by using a drill press that has vernier calibration of the table's movement in three axes. When possible, the specific header dimensions and can-wall thickness should be obtained from the relay supplier or by examining a non-DPA test sample.

d. Gradually machine away the weld area. Typically, removal of 0.025 millimeters to 0.050 millimeters (.001 inch to .002 inch) of the relay wall thickness per pass with the end-mill is suggested.

   NOTE: If rotational speed of the end-mill is too fast, overheating and other problems can occur. If rotational speed is too slow, unacceptable vibration of the relay assembly may be induced.

e. During the machining, vacuum off the machined area continually or as often as possible so as to remove loose metallic particles that could disrupt later examinations.

f. Ideally, the weld is machined to a depth that reveals a seam around the relay in place of the weld. This should be a closed seam, i.e., the milling should not be so deep that any actual openings into the cavity exist.

   NOTE: Do not attempt to separate the relay assembly from the header in a shop area.

g. Take the relay to the clean area where the final inspection is to occur.

h. Using adhesive tape and a vacuum, remove all loose (or potentially loose) particles from around the machined surfaces. Examine the weld area at 30X magnification to verify that no loose particles are present.

   NOTE: If adjunct sealants were not completely removed, their presence on the header may be visible at this point, as evidenced by silicone particles around the periphery of the header.

i. Once it has been verified at 30X magnification that the relay exterior is free of particles, do not handle it without wearing finger cots or lint-free rubber gloves.

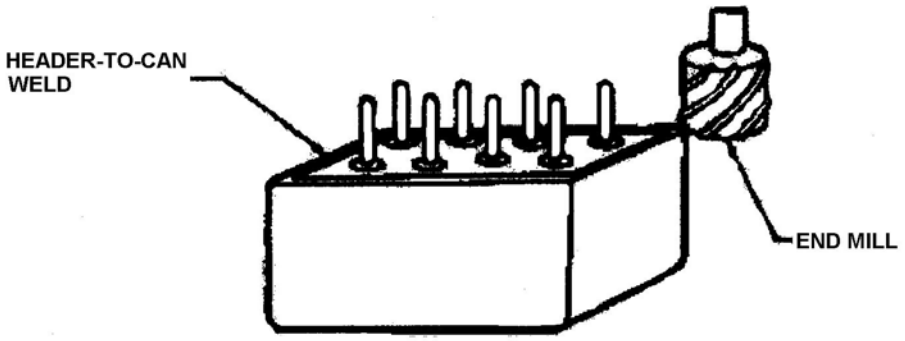

FIGURE 17-1. End-milling of header-to-can weld.

17.1.1.5.3 Rectangular type enclosure - method 2. NOTE: Method 1 is preferred and should be used whenever possible. Method 2 is an alternate approach to be used when the equipment of method 1 is not available or the procedures of method 1 are incompatible with the relay being dissected. A cut is made around the periphery of the enclosure approximately 2.5 millimeters (0.10 inch) above the base of the header. Depth of cut is not to exceed 90 percent of the thickness of the enclosure wall utilizing a cutting wheel (aluminum oxide) mounted in table saw fashion. After completion of the peripheral cut, the entire relay surface is vacuum cleaned. A sharp knife edge is then used to cut through the remainder of the wall enclosure.

17.1.1.6 Internal examination. Figure 17-2 shows a typical relay. All exposed inner surfaces of each relay shall be examined for the following characteristics at a minimum magnification of 20X.

a. Contamination. Loose particles of metallic or nonmetallic type or loose Teflon insulation or other fibrous material within the relay or cover is unacceptable.

b. Internal adjustment. Using appropriate gauges measure the gap between the N. O. contact and the movable gap by optical or mechanical means.

c. Contacts and terminals.

   (1) Burrs, cracking, or peeling of plating detectable at 20X magnification is unacceptable, if movable when probed with a force of 1.2 Newtons (125 grams) at 10X magnification.

   (2) Contacts not in alignment with their mating contact and parallel (equal contact gap) with each other are unacceptable.

   (3) Contact terminals with flash and ball type weld splatter or expulsion detectable at 20X magnification is unacceptable, if movable when probed with a force of 1.2 Newtons (125 grams) at 10X magnification.

d. Armature and pole piece.

(1) Armature and pole piece gaps for burrs, cracking, or peeling of plating detectable at 20X magnification is unacceptable, if movable when probed with a force of 1.2 Newtons (125 grams) at 10X magnification. (Reduction in magnification facilitates discernment of movement.)

(2) Rust detectable at 20X magnification between gaps or in armature or pole piece surfaces is unacceptable.

(3) Cracked or eroded glass on contact pusher bead detectable at 20X magnification is unacceptable.

e. Coil assembly.

(1) Ensure coil does not rotate nor exhibit looseness upon its core.

(2) Coil lead between coil and the coil terminal does not exhibit uninsulated portions where possibility of shorting exists, interference with moving parts, kinks, or tension (stretched tight).

f. Coil assembly frame: Must meet the following weld pull test:

(1) Grind or peel excess can material to provide frame tab clearance for pull test.

(2) Remove coil assembly (frame) from header by use of small hand grinder and cut-off diamond-impregnated wheel approximately 25 millimeters (1 inch) in diameter and 0.5 millimeters (.02 inches) thick.

(3) Each weld tab shall have a minimum of 1.5 millimeters (.06 inches) protruding above the header after cut-off operation.

(4) Grip protruding end of tab and peel away from header. Take note and measure force to separate weld. Examine weld remnants. If either observation arouses suspicion of weld integrity, investigate other welds more thoroughly as directed by the responsible relay parts engineer. A good weld should withstand a pull force of 85 Newtons (20 pounds) minimum.

(5) Relays are considered marginal when they exhibit coil assembly frame spot weld misalignment or spot weld area partially penetrating frame-to-header. (Pull force minimum requirement specified herein shall be adhered to).

g. Relays. If a leadless inverted device (LID) is used, it shall pass die shear and adhesive bond tests, and also bond strength of small interconnect wires in accordance with MIL-STD-883. Die shear requirements are based on area of adhesion. Wire bond strength is based on diameter of wire to chip on the LID.

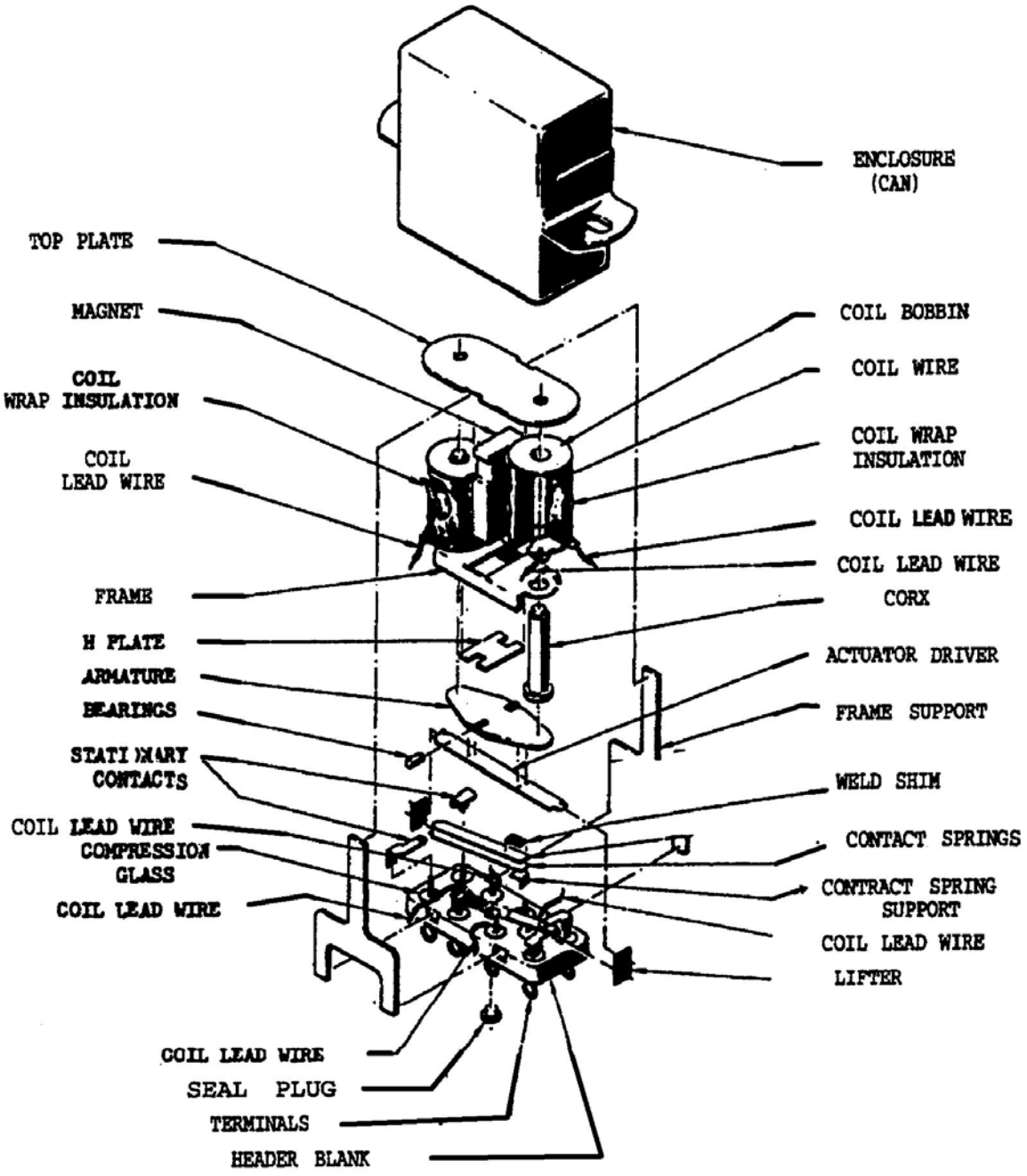

FIGURE 17-2. Typical latching relay.

REQUIREMENT 18

DETAILED REQUIREMENTS FOR RESISTORS

18. General. This section describes detailed requirements for a DPA of commonly used resistors. These requirements supplement the general requirements in section 4. Examples of typical configuration sketches are included. When applicable, specification numbers or types are referenced to assist in identification. Pre-DPA tests, such as functional tests and solderability tests, are assumed to have been satisfied by normal inspection and testing and are therefore not addressed.

18.1 Resistors, variable wire wound (MIL-PRF-39015). Typical resistors are shown on figures 18-1 and 18-2. It is recommended that variable resistors not be used in space applications.

18.1.1 Method.

18.1.1.1 External visual. Conduct visual examination at 20X minimum magnification and examine terminals, leads, marking, case, and adjustment screw.

18.1.1.2 Sample preparation. During the process of opening the enclosure, care must be exercised to assure that external liquid, gaseous, particulate, or other types of contamination do not enter the interior areas. The three basic types should be opened as follows:

a. Resistor with a round lid seal in a square plastic enclosure (see figure 18-1). Insert probe under edge of lid and pry lid off. Remove gear and actuator screw, then chemically strip in accordance with EIA-469 the remainder of assembly to expose all terminations.

b. Resistor assembly with an oblong plastic case with solid molded ends and base (see figure 18-2). Scribe a notch along the bond between case and body. Insert a probe into the notch and pry cover from body. This separates the worm screw drive and wiper arm from the resistance winding. The base containing the resistance wire shall be carefully broken by means of a vise or similar device to expose the wire and lead terminations.

c. Single-turn type. This resistor consists of an extended shaft, metal case, and a plastic insulated end containing the terminals. Disassemble by straightening the case roll-over, which holds the plastic end and removing the internal rotor assembly.

18.1.2 Data records. DPA findings that deviate from the specified configuration or other requirements shall be documented as defects.

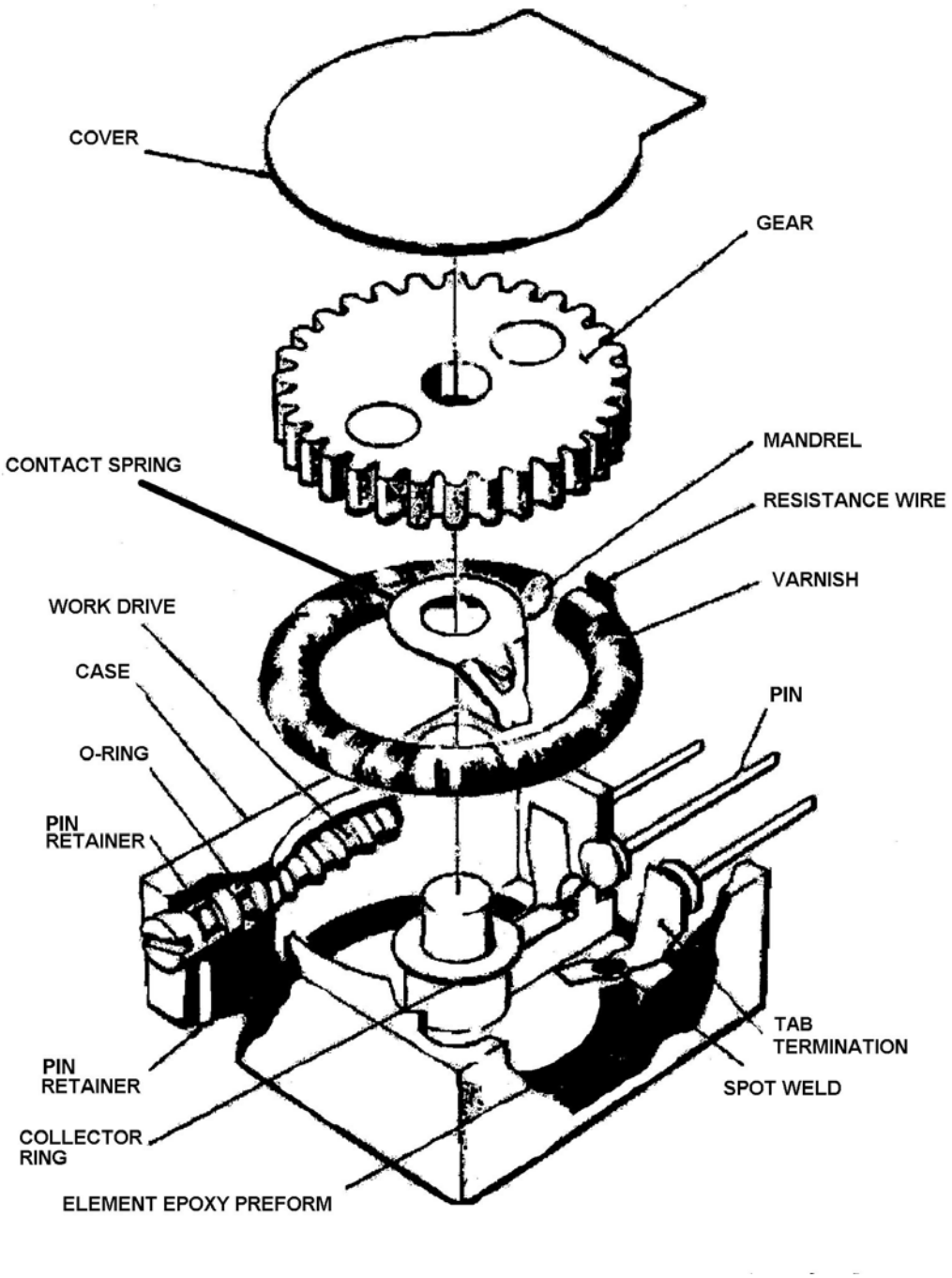

FIGURE 18-1. Variable wire wound resistor (typical).

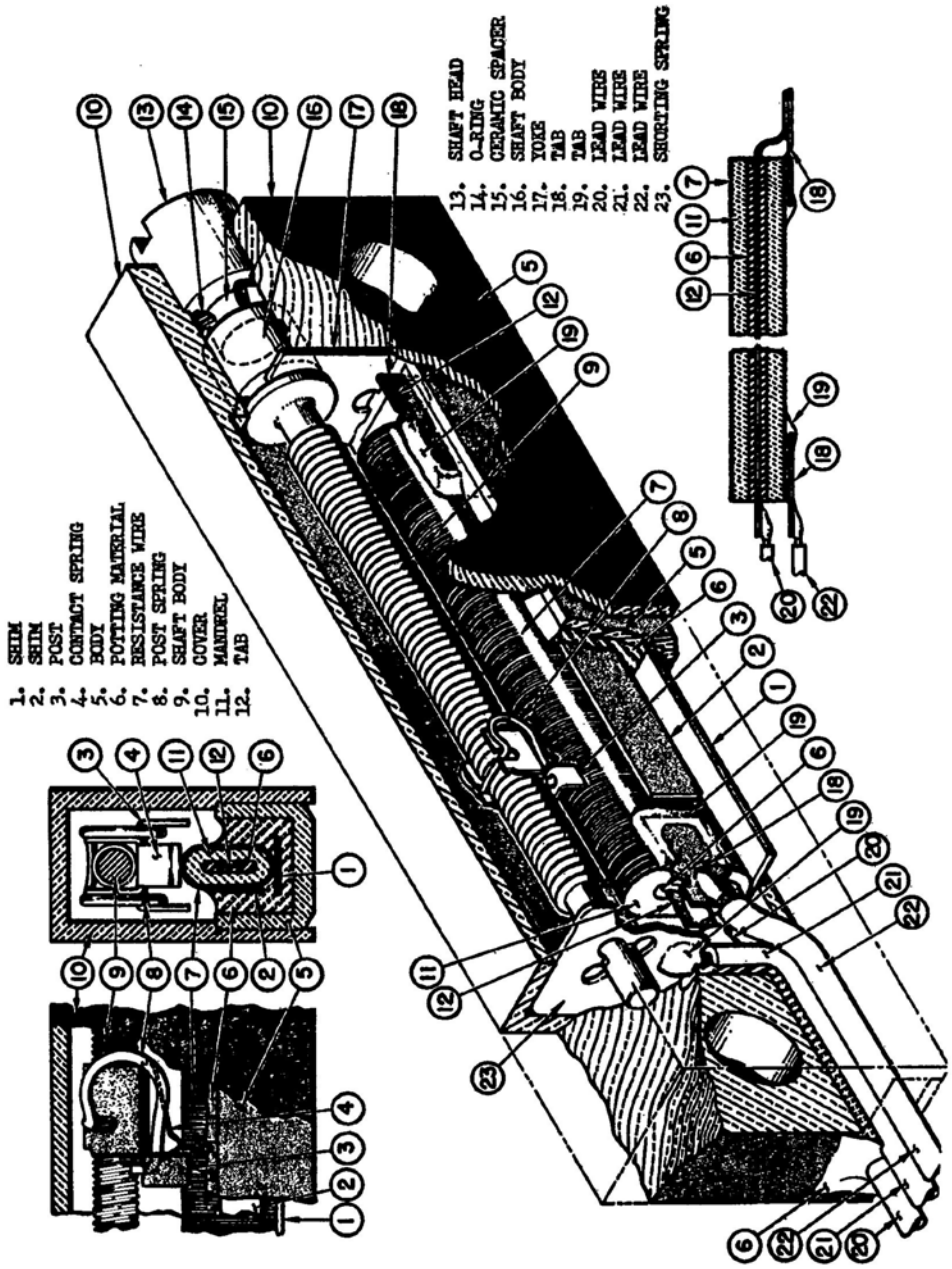

FIGURE 18-2. Variable wire wound resistor.

18.1.3 Evaluation criteria. When the DPA is being conducted as a lot conformance test, the associated production lot shall be rejected if one or more of the DPA sample parts exhibit any of the defects listed below (as applicable to the type of part being examined). All exposed inner surfaces of each resistor shall be examined at a minimum magnification of 30X during each phase of the opening procedure for the following characteristics:

a. Loose windings on active portion of resistor.

b. Wire kinks, abrupt bends, or overlaps.

c. Loose wire ends or wraps capable of touching each other or other conductive parts.

d. Any lubricant, contamination, or flux residue on resistance element.

e. Resistance element not secure to body.

f. Body and wiper stops cracked, damaged, or distorted.

g. Loose or cracked welds.

h. Burning at weld greater than 1/5th of tab width.

i. Loose, cracked, or broken terminals.

j. Foreign or extraneous material, such as weld or fractures, solder splatter, flux residue, particle slivers, etc.

k. Internal connections that are soldered, not welded.

l. Reductions in diameter of resistance wire to 5/6ths or less of initial diameter.

18.2 Resistors, variable, non-wire-wound (MIL-PRF-39035). Variable resistors are not recommended for critical space applications.

18.2.1 Method.

18.2.1.1 External visual. Conduct visual examination at 20X minimum magnification, and examine the terminals, leads, marking, case, and adjustment screw for defects. Also, check for configuration compliance.

18.2.1.2 Sample preparation. Follow the same procedure as in paragraph 18.1.1.2.

18.2.2 Data records. DPA findings that deviate from configuration and other requirements shall be documented as defects.

18.2.3 Evaluation criteria. When the DPA is being conducted as a lot conformance test, the associated production lot shall be rejected if one or more of the DPA samples exhibit any of the following defects listed below. All inner surfaces shall be examined at 30X minimum magnification during each phase of the opening procedure for the following characteristics:

a. Foreign or extraneous material, such as fibers, wear debris, etc., on the resistor element or body.

b. Any scratch, lifting or blistering, or discoloration of the resistor element.

c. Cracks or chip-outs on ceramic substrate in and around the resistor element.

d. Contamination, such as flux residue, lubricant not intended by design, etc., on the resistor element.

e. Wiper arm cracked, damaged, or distorted.

f. Loose or cracked welds.

g. Burning at weld greater than 1/5 of tab width.

h. Cracks on the outer casing.

18.3 Resistor, metallized film (MIL-PRF-55182 and MIL-PRF-39017). Typical configurations are shown on figures 18-3 and 18-4. DPA shall not be required when a precap visual inspection has been performed on 100 percent of the lot using the criteria listed herein. Otherwise, resistors shall be examined using the following procedures:

18.3.1 Method.

18.3.1.1 External visual. Examine resistors at 30X minimum magnification for cracks on the epoxy coating or glass seal, flaws on the leads (nicks, cuts, crushing, or exposure of copper or base metal) and marking, and nonconformance with configuration requirements.

18.3.1.2 Hermeticity. Conduct seal test on each sample, when applicable, after all other tests have been performed and just prior to sample preparation for internal inspection. Seal test shall be performed in accordance with the requirements of the procurement specification.

18.3.1.3 Sample preparation.

18.3.1.3.1 Conformally coated resistors. Conformal coating can be mechanically or chemically removed. When mechanical means are employed, potential physical and mechanical damage could be induced; therefore, extreme care must be taken in order not to introduce defects to the resistor itself that could cause the lot to be rejected. When chemically stripping the coating, use a process and material which dissolves the coating and exposes, but not attacks, the metal film, core, and terminations, leads, and welded connections, and which does not discolor or stain any surface. As required, perform SEM inspection and check for corrosion.

18.3.1.3.2 Hermetically sealed resistors.

a. Conformally coated, ceramic body. Strip resistor's conformal coating in accordance with 18.3.1.3.1, then examine the hermetic packaging for any signs of contamination, cracks on the ceramic sleeve, and pits or voids on the solder seal. Open the ceramic outer packaging by using a small lathe machine to expose the metallized resistor, being careful not to introduce any contamination. Prepare the lathe by cleaning both jaws and tool bit with alcohol to remove the oils. Carefully place the resistor between the jaws so that one end protrudes. (NOTE: Do not close the jaws too tightly.) Cut the metal end cap, keeping the lead attached, just beyond the corner radius. Repeat this procedure for the other end, then slide the ceramic sleeve out to expose the internal resistor.

b. Glass body. Scribe the glass sleeve with a diamond wire saw, then place the resistor on a lint-free tissue, and fold the tissue over. Lightly tap the device with a small hammer until the glass breaks and the glass chips can be removed. Care must be exercised in performing this procedure in order not to induce damage to the internal resistor.

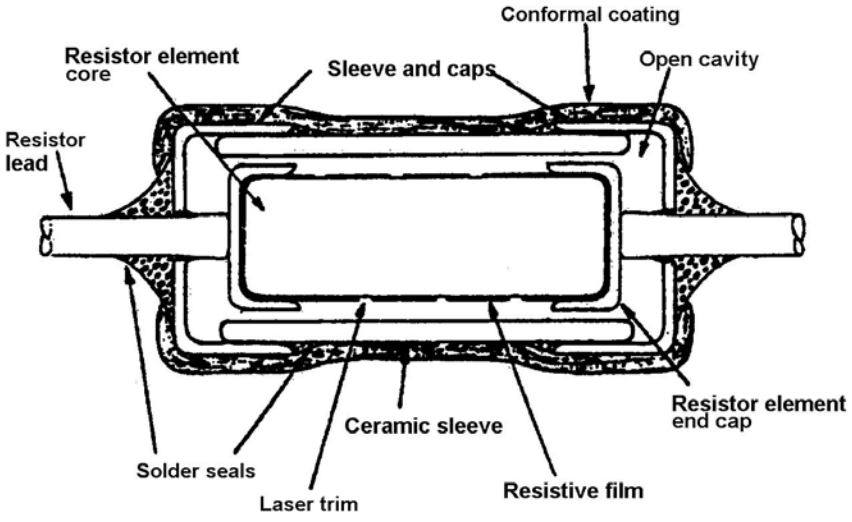

FIGURE 18-3. Typical Hermetically Sealed Metal-Film Resistor, RNR Style.

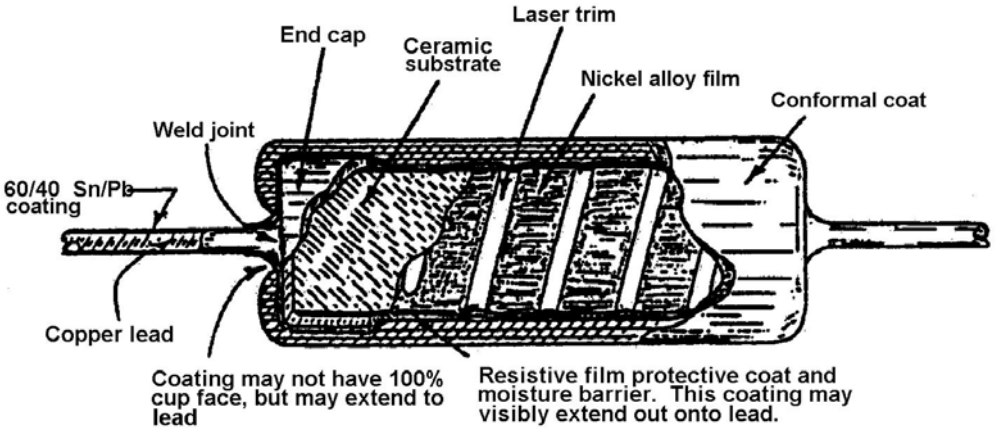

FIGURE 18-4. Nonhermetically Sealed Metal-film Resistor, RNC Style.

18.3.1.4 Removal of internal end caps. The end caps shall be removed to inspect for any sign of corrosion, blistering, or peeling away of the plating material or metal film under the caps. This procedure shall be performed after the internal visual inspection has been completed.

Roll the internal resistor between two clean, flat, hard surfaces. Aluminum pads and glass sheets have been used with success. After rolling several times, the end caps should fall off from the resistor core. Typically, the caps come off one at a time. When rolling the remaining cap, care must be taken to ensure that damage is not induced to the exposed end. Inspect caps and ends of resistor element at 30X minimum magnification. Any corrosion, peeling, or blistering of the plating or metal film under the end caps shall be cause for rejection.

18.3.2 Data records.

18.3.3 Evaluation criteria. When the DPA is conducted as a lot conformance test, the production lot shall be rejected if one or more of the DPA samples exhibit any of the defects listed below. All exposed inner surfaces of each resistor shall be examined at 30X minimum magnification for the following characteristics:

a. Cracked or chipped core.

b. End cap misalignment greater than 10 degrees.

c. Weld splatter at lead-to-end cap termination, or cracks in weld joint. Weld splatter that is confined to the flat surface of the end cap (not the skirt) is acceptable.

d. Cracks, splits, holes (from welding operation) or cold solder joints.

e. Corrosion lifted, blistered or missing plating material on the end cap; discoloration due to welding is not cause for rejection.

f. Foreign material or contamination on the metal film.

g. Any particle seated on the spiral cut.

h. Feathering of the metal film due to laser trimming that extends to more than 50 percent of the width of the trim.

i. Damage to resistance element that reduces the width (from overtrimming) of any of the metallized turns to less than 50 percent of the original design value.

j. Evidence of heavy stain or corrosion on resistance element. Discoloration of tantalum-based resistors due to thermal stabilization or laser trimming shall not be cause for rejection. Watermarks are not considered rejects.

k. Metal film lifting, peeling, or blistering as observed visually or determined by a cellophane tape test.

l. Intermediate coating, when used, that does not extend to one-half the length of the skirt of the end caps.

m. Discoloration, foreign material, bubbles or pinholes on the intermediate coating, or coating that is peeling away.

n. Discolored or hollow core.

o. Excessively deep cuts during laser trimming. Laser trim cuts of more than 0.18 millimeters (.007 inches) deep for thick films or 0.0125 millimeters (.0005 inches) deep for thin films.

p. Uncut material remaining after a laser scribe due to "skipping" of the laser beam.

q. Cracks in the glass seals of hermetically sealed resistors.

18.4 Resistors, fixed, metal-foil (MIL-PRF-55182, RNC90 style).

18.4.1 Method.

18.4.1.1 External visual. Conduct external visual examination as in 18.3.1.1 except use 10X magnification.

18.4.1.2 Terminal strength. A terminal strength test shall be performed on one-third of the samples in accordance with applicable specification.

18.4.1.3 Sample preparation. Either of the following methods may be used in opening (exposing) resistor for internal examination:

a. Mechanical decapsulation (recommended method).

   (1) Gently hold the sample at the two narrow sides parallel to the leads. Slowly grind off the flat (wide) side of the case with a 180 grit paper, or finer, until the plastic is thin enough to break off with pointed tweezers or when the rubber coating starts to show through.

   (2) Repeat step 1 for the other flat side. When only the four narrow sides have the plastic case material still attached to them, gently break these off with a pair of pointed tweezers.

   (3) The rubber film surrounding the substrate package can be easily removed with the tweezers. However, the moisture barrier coating (soft amber color coating) under the rubber may not be as easy to take out. Carefully and slowly scrape the varnish with the toothpick and tweezers, making sure that no rejectable defects are introduced to the resistor element.

18.4.2 Data records. DPA findings that deviate from configuration and other requirements shall be documented as defects.

18.4.3 Evaluation criteria. When the DPA is conducted as a lot conformance test, the production lot shall be rejected if one or more of the DPA samples exhibit any of the defects listed below. All exposed inner surfaces of each resistor shall be examined at 30X minimum magnification for the following characteristics:

a. A crack or chip in the substrate that extends under the resistive pattern.

b. Substandard welding, such as:

   (1) Weld print missing the film pads by more than 20 percent.

   (2) Half of each weld print is outside the lead outline.

   (3) Lead is over active grid lines.

   (4) Weld splatter.

   (5) Cracked paddle or the flat welded portion of lead terminal.

   (6) Torn ribbon connection.

   (7) Epoxy dot material running under or into weld connections.

c. Cracked, nicked, or dented lead terminal.

d. Resistor images which indicate hot spot possibility by a 75-percent reduction of path-metal.

e. Any loose or lifted active grid lines.

f. Heavy scratches or gouges in active area of resistor element.

g. Any particle large enough to reduce the isolation area width at any point by more than 50 percent.

h. Trim cuts made to adjust the resistance are clean without particles that might cause shorting.

18.4.4 Chemical dissolution of the lead welds. Chemical dissolution of the lead weld will be accomplished to allow inspection of the pad beneath the weld. Immerse the lead tabs into a shallow container of nitric acid, (caution should be exercised), for about 4 minutes then rinse in water. Inspect the weld pad area to ensure that all copper has been removed. If not, repeat the acid dip. After the copper has been removed, inspect the weld pads using transmitted light. Reject any part that exhibits a crack or series of cracks that exceed 25 percent of the weld circumference..

18.5 Resistors, fixed, chip, style RM (MIL-PRF-55342).

18.5.1 Method.

18.5.1.1 External visual. Perform visual examination on all samples at 30X minimum magnification.

18.5.2 Data records. DPA findings that deviate from configuration and other requirements shall be documented as defects.

18.5.3 Evaluation criteria. When the DPA is conducted as a lot conformance test, the production lot shall be rejected if one or more of the DPA samples exhibit any of the defects listed below. All exposed surfaces of each resistor shall be examined at 30X minimum magnification for the following characteristics:

a. Cracked or chipped parts.

b. Foreign material or discoloration on the substrate, resistive film, or terminal bands.

c. Lifting, blistering, or peeling of the resistive film, terminal bands, or protective coating (when applied).

d. Any one rejection mode described in Appendix B of MIL-PRF-55342.

e. Uncut material leftover from scribing/trimming.

18.6 Resistor networks (MIL-PRF-83401).

18.6.1 Method.

18.6.1.1 External visual. Conduct visual examination at 20X minimum magnification of terminals, leads, markings, all surfaces, and dimensions. One representative image of one device showing all markings shall be taken and provided.

18.6.1.2 Hermetic seal test. As applicable, hermetic seal testing shall be performed in accordance with MIL-PRF-83401.

18.6.1.3. Pull test. One-third of the samples shall be tested in accordance with the specification requirements.

18.6.1.4. Delid. The following techniques are recommended for delidding samples. Other techniques may be used, providing appropriate prior approval has been obtained.

a. Solder and brazed sealed lids. Using a sharp carbide scribing tool carefully scratch the solder (or braze) down and inward (toward the package center) on all four sides. Continue scribing using moderate pressure until there is sufficient clearance under the lid to insert an Exacto knife blade. Carefully insert the blade and pry up the top at one corner of the lid. Carefully insert the Exacto knife further into the package (holding the blade parallel to the package surface) and work the blade outward from the corner along the joint until the lid separates.

b. Welded packages. Using a fine Swiss file (equivalent file number 1 or 2), carefully file a chamfer approximately 30 degrees around all four sides of the package at the weld seam. Continue filing until microscopic examination at 20X magnification reveals minute cracks forming between the top and case edge on all four sides. Remove all metal filings using an artist brush. Carefully insert a sharp Exacto blade in the crack at one corner and pry the top of the package off in a can opener fashion.

c. Frit-sealed packages. Using a sharp carbide scribing tool, carefully scribe the glass frit on four sides. Scribe the package evenly on all four sides. Using only moderate pressure, grasp the package between thumb and forefinger, top to bottom.
NOTE: Be careful not to touch the leads with the scribing tool.

Continue scribing this area until a crack appears between the top and the remainder of the frit. The frit must show signs of cracking on all four sides. At this point, the operator should be holding the package together with his thumb and forefinger. Lay the package down and carefully pry up the lid at one corner; do not touch the leads.
NOTE: Once the lid has been removed, handle the device only by the sides.

d. Molded packages. The device shall be submerged in a suitable stripping solution to remove the encapsulating material and expose the substrate. The stripping solution, may be used either hot or cold, as applicable; provided that it does not damage or discolor the internal structure.

18.6.1.5 Internal visual. All exposed surfaces of each resistor network and substrate shall be examined at 30X minimum magnification. All anomalies shall be noted and documented.

18.6.2 Data records. DPA findings that indicate deviation from specified configuration or other requirements, or the existence of defects, shall be documented.

18.6.3 Evaluation criteria. When the DPA is being conducted as a lot conformance test, the associated production lot shall be rejected if one or more of the DPA sample parts exhibit any of the defects listed below.

18.6.3.1 Particles.

a. Metallic particles.

(1) Unattached: There shall be no unattached metallic particles.

(2) Attached: Attached metallic particles shall not exceed 0.125 millimeters (.005 inches) in the major dimension. Particles shall not touch nor extend over the metal film. Particles shall be considered attached when they cannot be removed with a gas blow of dry oil-free nitrogen from a 150 kilopascal (22 psi) gauge pressure source.

b. Nonmetallic particles. Glass, fibers, and other nonmetallic materials within the enclosure shall not exceed 0.125 millimeters (.005 inches) in their major dimension.

18.6.3.2 Residue. There shall be no visible laser trim residue at 50X magnification within the enclosure.

18.6.3.3 Metallization defects. Any of the following anomalies in the active circuit metallization shall be cause for rejection.

a. Metallization scratches: A scratch is defined as any tearing defect that disturbs the original surface of the metallization.

(1) Any scratch in metallization through which the underlying resistor material also appears to be scratched.

(2) Any scratch in the interconnecting metallization which exposes resistive material or oxide anywhere along its length and reduces the width of the scratch-free metallization strip to less than 50 percent of its original width.

b. Metallization voids: Any void in the interconnecting metallization that leaves less than 50 percent of the original width undisturbed. A void is defined as any region in the interconnecting metallization where the underlying resistive material or oxide is visible which is not caused by a scratch.

c. Metallization adherence: Any evidence of metallization lifting, peeling, or blistering.

d. Metallization probing: Probe marks on the interconnecting metallization other than the bonding pads that violate the scratch or void criteria.

e. Metallization bridging:

(1) Metallization defect that reduces the distance between any two metallization areas to less than 0.008 millimeters (.0003 inches).

(2) Bridging between metallization and resistor pattern, not intended by design, which reduces the distance between the two to less than 0.0025 millimeters (.0001 inches).

f. Metallization alignment: Any misalignment between the resistor pattern and the metallization such that more than 0.0125 millimeters (.0005 inches) of resistor on a side is exposed.

g. Metallization corrosion: Any evidence of localized heavy stains, metallization corrosion, discoloration or mottled metallization.

18.6.3.4 Resistor defects. The active area of a resistor is that part of the resistance pattern that remains in series connection between resistor terminals and is not shorted by metallization. Any of the following anomalies within the active resistor area shall be cause for rejection:

a. Resistor scratches: Any scratch within the active resistor area.

b. Resistor voids:

(1) Any void or neckdown in the active resistor path that reduces the width of the stripe by more than 50 percent of the original width.

(2) Any void or necking down in the active resistor path for a line width design of less than 0.005 millimeters (.0002 inches) which reduces its original width by 25 percent or more

(3) Any void or chain of voids in the resistor element at the gold termination.

c. Resistor adherence: Any evidence of resistor film lifting, peeling, or blistering.

d. Probe marks: Any probe mark on the resistor material.

e. Resistor material corrosion: Any evidence of localized heavy stains or corrosion of resistor material in the active resistor path. However, discoloration of tantalum-based resistors due to thermal stabilization is not a cause for rejection.

f. Resistor bridging defects:

(1) Continuous bridging: Any conductive continuous bridging between active resistance stripes.

(2) Partial bridging defect that reduces the distance between adjacent active resistance stripes to less than 0.0025 millimeters (.0001 inches) or 50 percent of the design separation, whichever is less, when caused by smears, photolithographic defects, or other causes.

Exception. For a partial bridge within lines and spacing of 0.0025 millimeters (0.0001 inches) design width, visual separation (evident at 400X magnification) is sufficient for acceptance.

18.6.3.5 Laser trim faults.

a. A partial cut, or bridged trim link.

b. Remaining width in fine-trim area after laser cut is less than the width of the narrowest line within the same resistor pattern.

(1) Uncut material is remaining after a laser scribe due to "skipping" of laser beam.

(2) If laser cut is not in straight lines, the narrowest remaining width must be equal to or greater than the width of the narrowest lines within the same resistor pattern.

c. Oxide voids, cracking, or similar damage caused to the $Si0_2$ underlayer by laser beam where such damage touches active interconnects or resistor path.

d. Laser trim cut where edge of cut touches the active resistor path.

e. Any discoloration or change in surface finish of a resistor stripe by the direct laser beam or by spurious reflections caused by optics of the system.

f. Any chip intended to be laser-trimmed that is not laser-trimmed.

18.6.3.6 Resistor bonding pad defects: Any resistor containing one or more bonding pads with one or more of the following anomalies shall be rejected.

a. Globules: A globule is defined as any material with a smooth perimeter extending out from the bonding pad onto the resistor or substrate material. Such globules are usually featureless and of low reflectivity and therefore difficult to focus upon.

b. Missing metallization: Any indications of missing metallization whether at the perimeter or totally within the bonding pad. Resistor material may be visible in the areas of missing metallization.

c. Metallization corrosion:

(1) Any evidence of localized heavy, diffused stains, discolored material, or low-density material either on the pad's perimeter or totally within the bonding pad.

(2) Any evidence of stains or discoloration extending out onto the resistor or substrate material.

18.6.3.7 Oxide defects: Any resistor having the following oxide, scribing, or die anomalies shall be rejected.

a. Oxide void: An oxide void is defined as a fault in the oxide evidenced by localized double- or triple-colored fringes at the edges of the defect visible at 100X magnification. The following shall be cause for rejection:

(1) Any oxide void that bridges any two resistor or metal areas not intended by design.

(2) Any oxide void under metallization or resistor geometry.

b. Scribing and die defects. The following shall be cause for rejection:

(1) Less than 0.125 millimeters (.005 inches) oxide visible between active metallization and edge of a die. Excluded from this are any inactive metallization lines.

(2) Any chipout or crack in the active resistor or metal area.

(3) Any crack that exceeds 0.125 millimeters (.005 inches) in length or comes closer than 0.025 millimeters (.001 inches) to an active area on the die.

(4) Any crack in a die that exceeds 0.025 millimeters (.001 inches) in length and points towards the active circuit area.

(5) A die having an attached portion of an adjacent die which contains metallization or resistor material.

(6) A crack or chip in the backside of a die that leaves less than 75 percent of area intact or a crack or chip under a bonding pad.

18.7 Resistors, wirewound, accurate (MIL-PRF-39005). A typical configuration is shown on figure 18-5.

18.7.1 Method.

18.7.1.1 External visual. Conduct visual examination at 20X minimum magnification of terminals, leads, external coating, markings, all surfaces, and dimensions.

18.7.1.2 Sample preparation. Each group of samples shall be prepared as detailed below.

18.7.1.2.1 One half (round up). One half of the samples shall be encapsulated and sectioned in a plane parallel to the longitudinal axis to a depth exposing the core and terminal leads. The manner of sectioning shall be such that minimal damage is done to the device. An example to minimize internal damage to cavity or fragile devices is to backfill with potting material.

18.7.1.2.2 Remaining samples. The remaining samples shall be gently submerged in a suitable solution that dissolves the external coating and exposes but not attacks the resistance wire, core, terminations, and welded connections.

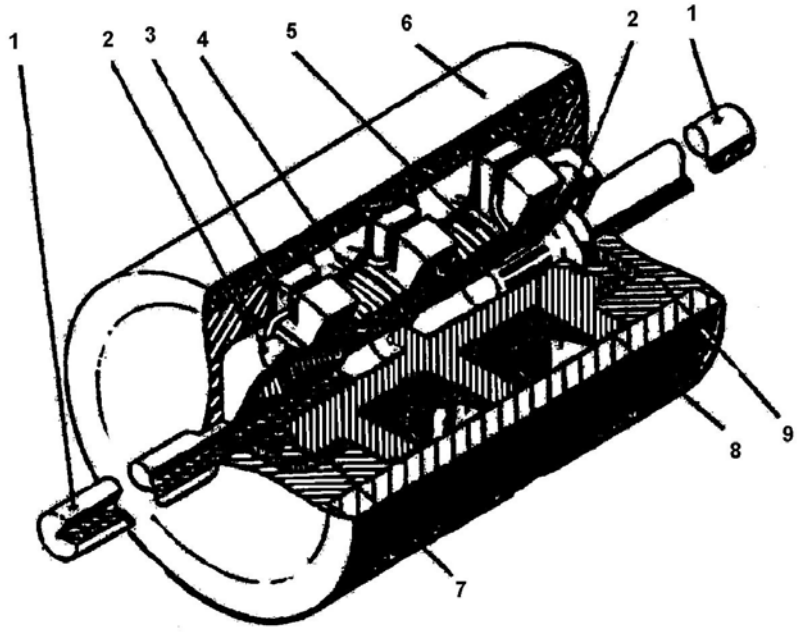

1	Lead
2	Weld Tab
3, 8	Bobbin
4	Cushion Coat
5	Resistance Wire
6	Enclosure shell
7	End Cap
9	Epoxy Fill

FIGURE 18-5. Typical wirewound Resistor (MIL PRF-39005).

18.7.1.3 Internal visual examination. All exposed surfaces of each resistor shall be examined at 30X minimum magnification. All anomalies shall be noted and photographed.

18.7.2 Data records. DPA findings that indicate deviation from specified configuration or other requirements or the existence of defects shall be documented.

18.7.3 Evaluation criteria. When the DPA is being conducted as a lot conformance test, the associated production lot shall be rejected if one or more of the DPA samples exhibit any of the defects listed below.

a. Wire kinks, abrupt bends, or overlaps.

b. Cracks or lifting in tab welds.

c. Cracks or distortion in bobbin or core.

d. Damage or discolored portion of encapsulant.

e. No evidence of weld tip indentation at welds.

f. Burning at weld greater than one-half tab width.

g. Absence of soft cushion coating over wire winding and beneath encapsulant.

h. Less than 0.60 millimeters (.025 inches) gap between leads (see item 10 in figure 18-5).

18.8 Resistors, fixed, wirewound, power, (MIL-PRF-39007) and wirewound power, chassis-mounted (MIL-PRF-39009). Typical configurations are shown on figure 18-6 and figure 18-7.

18.8.1 Methods.

18.8.1.1 External visual. Conduct visual examination at 20X minimum magnification, and examine terminals, leads, marking, general dimensions, and appearance for any evidence of defective workmanship.

18.8.1.2 Radiographic examination. Radiographic examination will be performed in accordance with method 209 of MIL-STD-202, (2 views rotated 90 degrees apart). The radiographs shall be inspected for the following conditions noted in 18.8.3.

18.8.1.3 Sample preparation. When resistors contain beryllium-oxide ceramic cores, there shall be no machining, grinding, filling, or polishing performed on the cores. Beryllium-oxide dust is highly toxic. Preparation of the samples shall be done as follows:

18.8.1.3.1 For MIL-PRF-39007 resistors:

a. Dissolve external coating in a suitable solution that exposes but does not attack the resistance wire, core, terminals, and caps and welded connections. The solvent shall not discolor or stain any surface.

b. When the resistor core is the only element left, to be examined, cut resistance wire from caps at locations sufficiently distant from weld connections or terminations such that the connections are not disturbed. This procedure facilitates core examination.

18.8.1.3.2 For MIL-PRF-39009 resistors:

a. Make two saw cuts (180 degrees apart) along the horizontal axis, deep enough to just penetrate the internal potting material.

b. Immerse resistor in a suitable solution to dissolve the potting material and remove the housing in order to expose the internal element. Solvent shall not damage the resistance wire, core, terminals, end caps and welded connections, or discolor or stain any surface.

c. When the resistor core is the only element left, to be examined, cut resistance wire from caps at locations sufficiently distant from weld connections or terminations such that the connections are not disturbed. This procedure facilitates core examination.

18.8.2 Data records. DPA findings that deviate from the specified configuration or other requirements shall be documented as defects.

18.8.3 Evaluation criteria. When the DPA is conducted as a lot conformance test, the associated production lot shall be rejected if one or more of the DPA samples exhibit any of the defects listed below. All exposed inner surfaces shall be examined at 30X minimum magnification during each phase of the DPA for the following characteristics:

a. End cap misalignment greater than 10 degrees.

b. End cap showing corrosion, lifted or missing plating.

c. Weld splatter at lead-to-cap termination, or cracked or partially lifted weld.

d. Split, cracks, or holes on the end caps.

e. Sudden kinks, bends, or sharp distortion on the resistance wire that reduces the wire diameter to 5/6ths or less of the initial value.

f. Loose windings on active portion of the resistor.

g. Wire not secure at weld on end cap.

h. Number of wire turns different between samples having similar resistance values, up to 5 percent or one turn, whichever is greater.

i. Space between wire turns more than five times the wire diameter except for values less than 1 ohm, or space between turns of less than the wire diameter except for high-value resistors using insulated wires.

j. Cracks, spalls, or surface holes on the core that exceed 0.60 millimeters (.025 inches) in the greatest dimension.

k. No extraneous particles 0.05 mm (.002 inches) or more in the maximum dimension located in the encapsulation between the two end caps.

l. Molded units shall show no evidence of voids or bubbles that reduce the total insulation area by more than 10 percent. Also, no single void or bubble shall have a major dimension greater than 0.60 mm (.025 inches). The lead end cap interface shall not extend beyond the encapsulant edge.

m. Welds shall be well positioned with no excess wire projecting beyond the weld junction or poking through the resistor coating.

n. Wire showing evidence of corrosion.

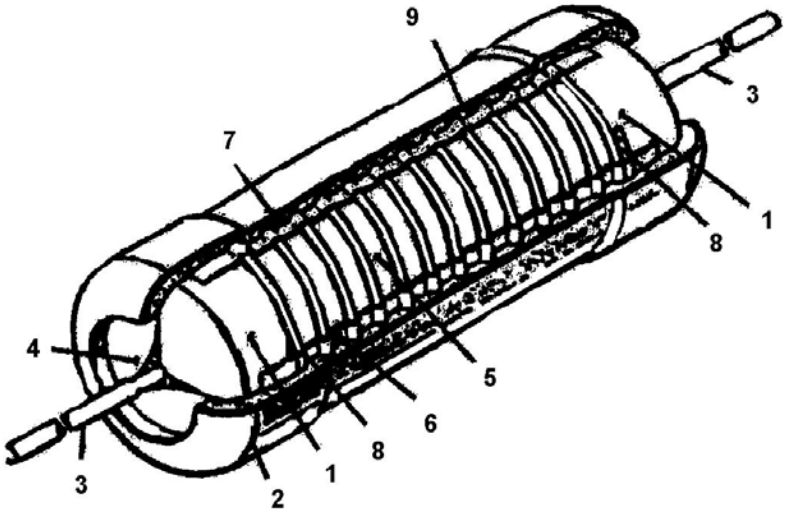

1	End Gap
2	Sleeving
3	Lead
4	Butt Weld
5	Core
6	Undercoating Under Wire
7	Wire
8	Resistance Weld
9	Outer Coating

FIGURE 18.6. Typical Wirewound Power Resistor (MIL-PRF-39007).

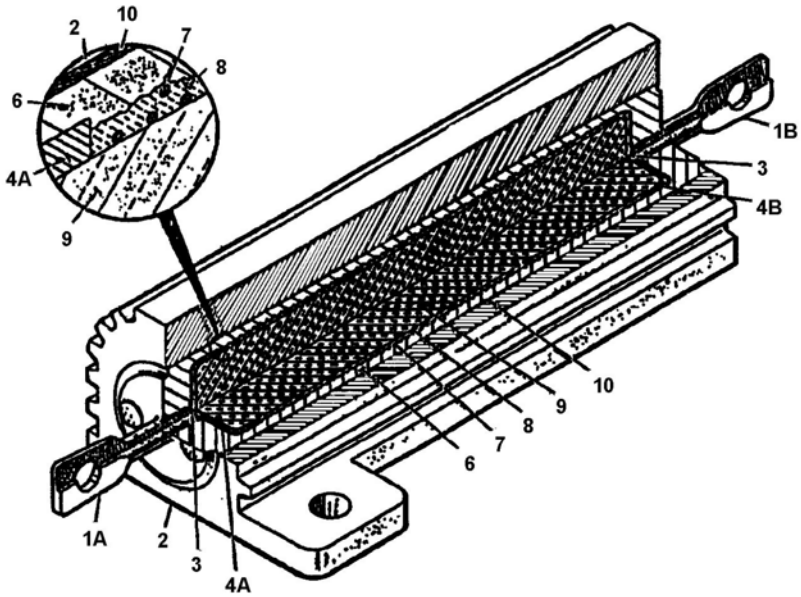

1	Terminal
2	Housing
3	Butt Weld (Cap-to-Terminal)
4	Cap
6	Molding Compound
7	Resistance Wire
8	Coating
9	Core
10	Tape

FIGURE 18-7. Typical Wirewound Chassis-Mounted Power Resistors.

REQUIREMENT 19

DETAILED REQUIREMENTS FOR SWITCHES

19. General. This section describes detailed requirements for a DPA of commonly used switches. These requirements supplement the general requirements in section 4. Examples of typical configuration sketches are included. When applicable, specification numbers or types are referenced to assist in identification. Pre-DPA tests, such as functional tests and solderability tests, are assumed to have been satisfied by normal inspection and testing and are therefore not addressed.

19.1 Switch, snap action.

19.1.1 Method.

19.1.1.1 Seal leakage. Switches shall be tested for seal leakage in accordance with the following as applicable.

a. Hermetic seal. Hermetically sealed switches shall be tested the same as relays (reference 17.1.1.2 herein).

b. Environmental seal. Environmentally sealed switches shall be tested in accordance with the procurement specification.

c. Nonsealed. Nonsealed switches shall not be subjected to any type of seal test.

19.1.1.2 External examination. Examinations shall be performed using a microscope with 10X magnification, except when an abnormality is suspected and then 30X magnification (maximum) may be used to verify product integrity.

a. Header glass seals. The glass seals on the headers of hermetically sealed switches shall be in compliance with MIL-H-28719.

b. Protective finish and plating (as applicable).

   (1) There shall be no unplated areas or discontinuities of protective finishes.

   (2) The finish shall be smooth and free from chips, blisters, peeling, or rough spots.

   (3) There shall be no evidence of plating flaking off.

   (4) There shall be no evidence of inadequate protection against corrosion.

   (5) The case shall be free from distortion and dents.

c. Part marking (as applicable). Marking shall be in accordance with MIL-STD-1285.

d. Terminals, studs, and mounting (as applicable).

   (1) There shall be no bent or broken terminals.

   (2) Switch terminals shall be in accordance with the detailed specification and shall be free from burrs and malformations.

   (3) Screw threads, tapped holes, and threaded inserts shall be of the size shown on the detailed specification, and shall be in accordance with FED-STD-H28, unless otherwise specified. No malformed threads shall be accepted. A minimum of three full threads of engagement shall be provided.

(4) Clearance holes and hardware such as nuts, washers, etc. shall be of the size shown on the detailed specification, and shall be free of burrs and malformations.

(5) Studs, flanges, brackets, etc. shall be securely fastened to the switch case.

19.1.1.3 Sectioning. The most common hermetic, environmental, and nonhermetic types of snap action switches are opened as follows:

a. Metal enclosure (hermetic seal and environmental seal). Place one side of switch enclosure on a flat grinding (disc) surface and apply a steady firm pressure by hand until surface is ground to a point where the remaining side wall thickness (approximately 10 percent) permits easy puncture with a sharp cutting tool such as an Exacto knife blade. Prevent the grinding operation from penetrating the enclosure by testing the wall thickness frequently during the grinding with the point of the Exacto blade. (The hands, instruments used, and all external surfaces of the switch enclosure should be cleaned and free of any contaminants upon completion of the grinding operation and just prior to penetrating switch enclosure). After completion of grinding and cleaning perform the final opening step over a clean white contaminant-free bench or paper surface. Penetrate enclosure with the point of the Exacto knife blade. Orient the switch enclosure so that particles generated during opening do not enter inner areas of the switch.

b. Plastic enclosure (non-hermetic seal). Place the point of an Exacto knife blade cutting edge into the groove where the enclosure sections are joined and force cutting edge into groove around outer periphery until all bonding material (usually an epoxy type) has been cut through. Prior to separating case; orient switch enclosure with respect to gravity to minimize entry of external contamination into the interior areas.

19.1.1.4 Internal examination. NOTE: Figure 19-1 is a visual example of a switch assembly containing two subminiature non-hermetic-seal-type snap-action switches with plastic enclosures. All exposed inner surfaces of the device shall be examined for the following characteristics at 20X minimum magnification:

a. Any detectable loose particulate matter is unacceptable.

b. Loose, broken, or misaligned components; not caused by the opening procedure is unacceptable.

c. Corrosion or peeling of plating or finish is unacceptable.

d. Devices shall be considered marginally acceptable if they exhibit the following characteristics:
NOTE: Corrective action to eliminate any marginally acceptable conditions shall be initiated at the supplier when such conditions have been detected in DPA.

(1) Adhering conductive or nonconductive particles (metal burrs or case flashing).

(2) Incomplete swagging or staking of assembly components (not 360 degrees).

(3) Scratches or nicks on contact interface surface areas.

1 Plunger Actuator
2 Guard Plunger Washer
3 Plunger Spring Retainer
5 Nut-Special
6 Spring-Compression
7 Plunger
8 Bracket
9 Spring-Compression
10 Plunger Pin
11 Contact-Movable
12 C-Spring
13 Housing
14 Header Assembly
15 Guard
16 Paint
17 Normally Closed Stationary Contact Terminal
18 Normally Closed Stationary Contact
19 Normally Open Stationary Contact
20 Normally Open Stationary Contact Terminal
21 Movable Contact Spring
22 Anchor-Stationary
23 Common Terminal
24 Washer-Plain
25 Bushing Actuator
26 Seal-Ring
27 Washer-Plain
28 Washer-Lock
29 Seal-Ring
30 Washer-Special
31 Spring-Actuator
32 Lever-Switch Actuation
33 Case-Switch
34 Rivet-Oval Head
35 Inert Gas Arc Weld
36 Glass Seal
37 Header Tubes for Terminal Solder Joint
38 Lead Wire Embedment
39 Insulation Electrical
40 Contact and Ground Wires

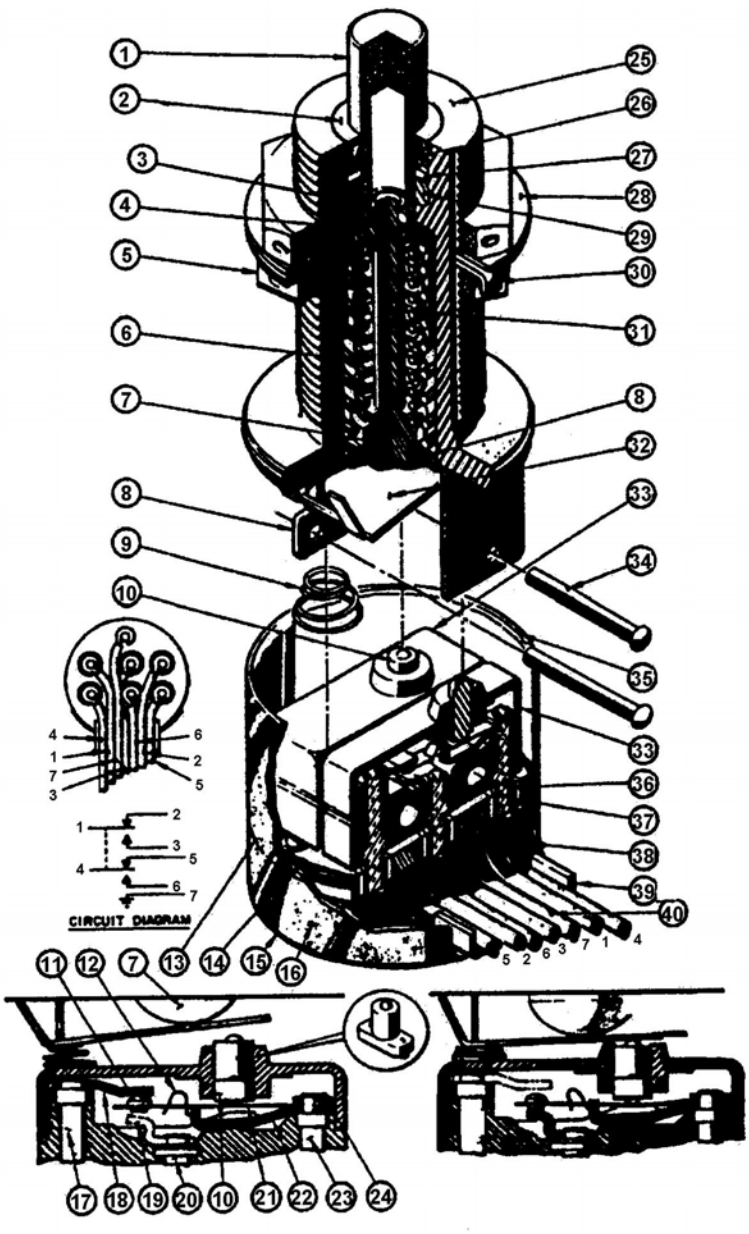

FIGURE 19-1. Switch assembly (typical).

19.2 Thermal switches.

19.2.1 Method. This section covers several manufacturers' types of thermal switches. The various types covered are depicted on figures 19-2 through 19-5. The type to be analyzed should be determined before dissection.

19.2.1.1 External examination. Thermal switches shall be examined to verify that the materials, external design and construction, physical dimensions, weight, marking, terminals, and workmanship are in accordance with the applicable detailed specification. Examination shall be performed using a microscope with 10X magnification, except when an abnormality is suspected, and then 30X magnification (maximum) may be used to verify product integrity for the following:

a. Header glass seals. The glass seals of the header shall be in accordance with MIL-H-28719.

b. Protective finish and plating.

   (1) There shall be no unplated areas or discontinuities of protective finish.

   (2) The finish shall be smooth and free from chips, blisters, peeling, or rough spots.

   (3) There shall be no evidence of plating flaking off.

   (4) There shall be no evidence of inadequate protection against corrosion.

   (5) The case shall be free from distortion and dents.

c. Marking. Marking shall be in accordance with MIL-STD-1285.

d. Terminals.

   (1) There shall be no bent or broken terminals.

   (2) Thermal switch terminals shall be in accordance with the detailed specification and shall be free from burrs and malformations.

   (3) Screw threads, tapped holes, and threaded inserts shall be of the size shown on the detailed specification, and shall be in accordance with FED-STD-H28, unless otherwise specified. No malformed threads shall be accepted. A minimum of three full threads of engagement shall be provided.

   (4) Clearance holes and hardware such as nuts, washers, etc. shall be of the size shown on the detailed specification, and shall be free of burrs and malformations.

   (5) Studs, flanges, brackets, etc. shall be securely fastened to the thermal switch case.

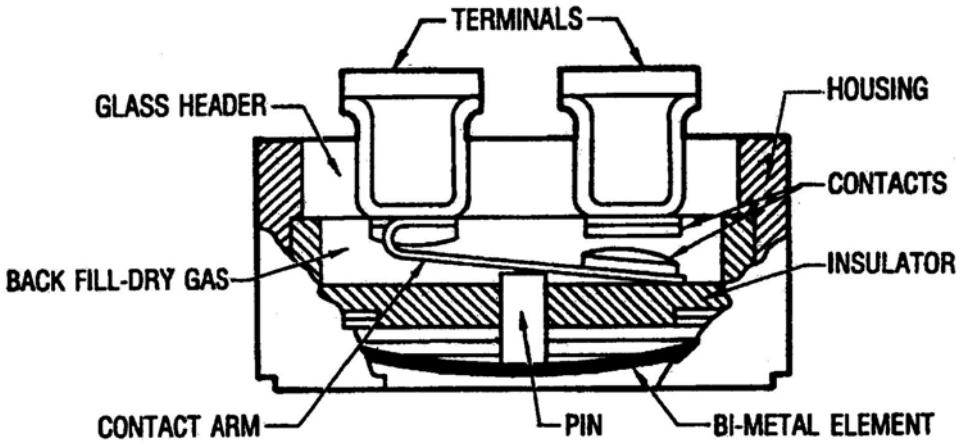

FIGURE 19-2. Type A, Thermal Switch Cross-sectional view.

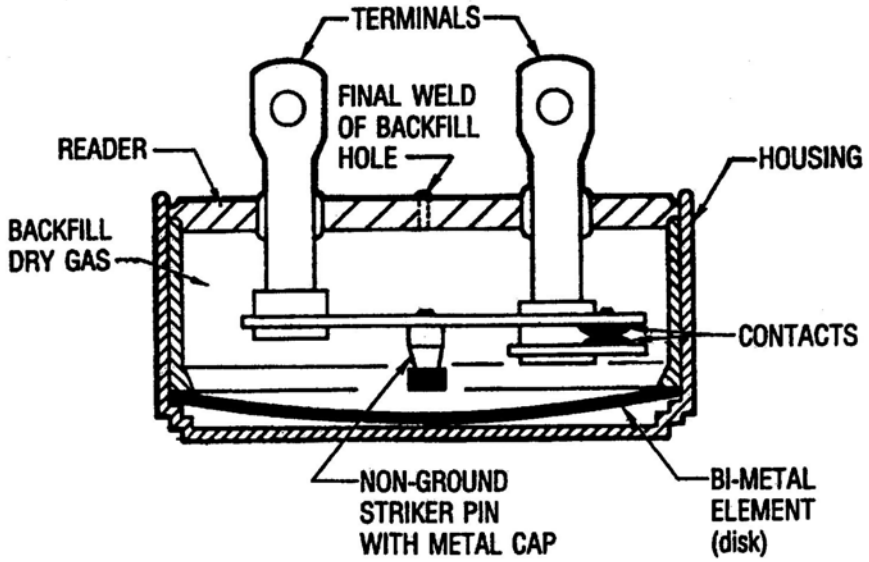

FIGURE 19-3. Type B, Thermal Switch Cross-sectional View.

19.2.1.2 Suggested sectioning. CAUTION: The introduction of foreign particles during opening can result in unacceptable conditions during the micro-clean inspection of 19.2.1.3. To avoid damage or deformation of the thermal switch, the use of holding devices such as wire, clamps, or pliers is prohibited. Remove all adjunct sealants for thermal switch headers prior to opening and then do the following:

a. Place temperature-sensing side on a flat grinding surface and apply a steady firm pressure by hand. The grinding operation must not penetrate the case, but should only remove sufficient wall material thickness so the remaining wall thickness (approximately 10 percent) can be readily cut through with a sharp cutting instrument such as an Exacto knife blade.

b. During grinding, vacuum off the affected areas continually or as often as possible in order to remove loose metallic particles that could disrupt later examinations. To avoid damage to the thermal switch enclosure, it should be firmly held by hand during each step of the opening procedure.

   NOTE: do not attempt to make the final opening of the thermal switch in a shop area.

c. Take the thermal switch to the clean room area where the final inspection (19.2.1.3) is to occur.
   NOTE: A specially cleaned area should be dedicated to the inspection. Personnel traffic shall be limited to those involved in the inspection. All equipment and material such as microscopes, filters, containers, tweezers, etc. shall be thoroughly cleaned prior to entering the area.

d. Using adhesive tape and a vacuum remove all loose (or potentially loose) particles from around the machined surfaces. Examine the affected areas at 30X magnification to verify that no loose particles are present.

e. Once it has been verified at 30X magnification that the thermal switch exterior is free of particles, do not handle it without using finger cots or lint-free rubber gloves.

19.2.1.3 Internal examination. Refer to figures 19-2 through 19-5 for illustrations of thermal switch constructions. All exposed inner surfaces of the device shall be examined for the following characteristics at 20X minimum magnification.

a. Loose particles (conductive or nonconductive), not caused by opening, within the switch or cover that are larger than 0.13 mm (.005 inches) in their longest dimension.

b. Loose, broken, or misaligned components not caused by opening are unacceptable.

c. Evidence of contamination film that can be detected by 20X magnification is unacceptable.

d. Corrosion or peeling of plating or finish is unacceptable.

e. For type C thermal switches only: Loctite on adjustment screw area other than adjacent to nut, where it is normally applied to secure adjustment screw, is unacceptable. (Loctite is not applicable to types A and B thermal switches).

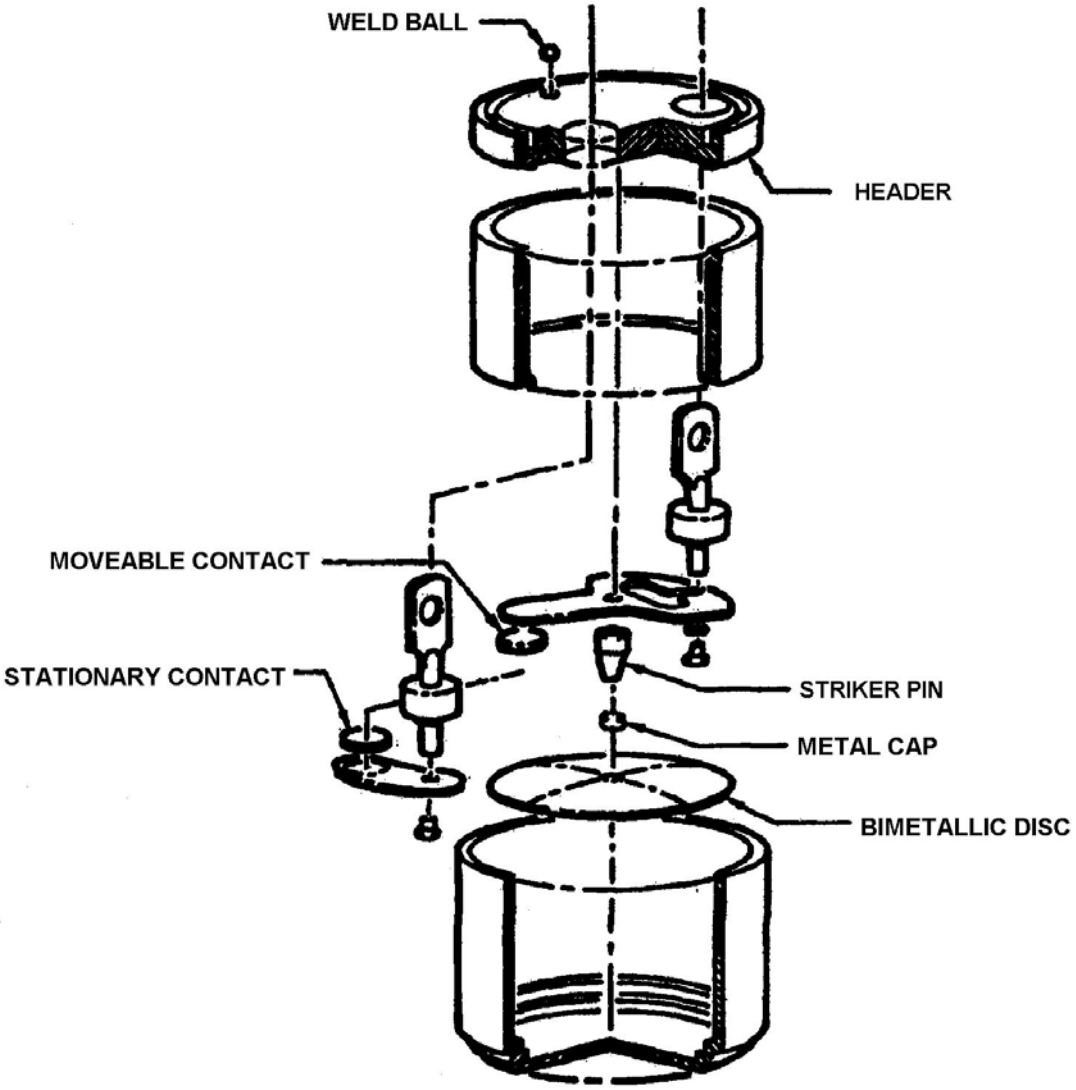

FIGURE 19-4. Type B thermal switch exposed view.

1 COVER
2 DISK
3 ADJUSTING SCREW (WITH HEX FLANGE)
4 RIVET
5 MOVEABLE ARM
6 STAND OFF BUMP (2 ON BASE)
7 BASE
8 RETAINING NUT (MOLDED INTO BASE)
9 CUP
10 CONNECTOR
11 INSULATOR
12 WELD JOINT
13 BARREL
14 SEAL GLASS
15 LEAD WIRE
16 TERMINAL FEED-THRU
17 WELD (FINAL SEAL)
18 TERMINAL EXTENSIONS
19 STATIONARY CONTACT
20 MOVABLE CONTACT
21 INSULATOR BEAD
22 SPRING
23 MOUNTING BRACKET

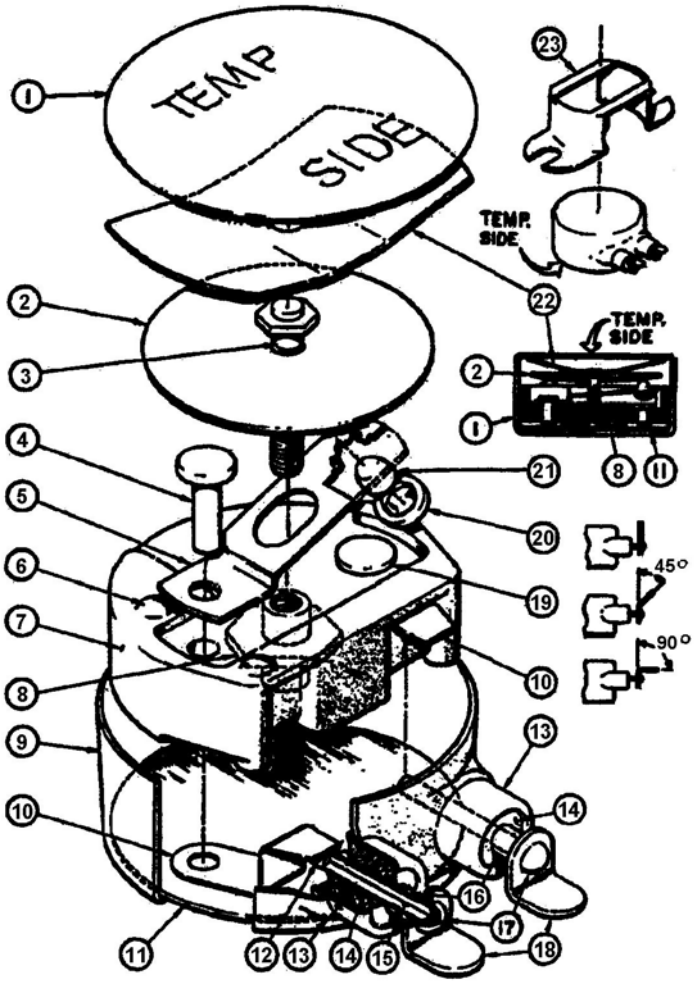

FIGURE 19-5. Type C thermal switch exploded and cross-sectional views.

REQUIREMENT 20

DETAILED REQUIREMENTS FOR THERMISTORS

20. General. This section describes detailed requirements for a DPA of commonly used thermistors. These requirements supplement the general requirements in section 4. An example of a typical configuration is depicted on figure 20-1. When applicable, specification numbers or types are referenced to assist in identification. Pre-DPA tests, such as functional tests and solderability tests, are assumed to have been satisfied by normal inspection and testing and are therefore not addressed.

20.1 Thermistor, glass bodied, hermetic (MIL-PRF-23648).

20.1.1 Method.

20.1.1.1 External visual. Examine thermistor at 20X minimum magnification for defects in the glass, construction, marking, leads, and dimensions.

20.1.1.2 Sample preparation. Parts shall be cleaned, encapsulated, and sectioned along the longitudinal axis to a depth that exposes the center of the leads.

20.1.1.3 Internal visual. Examine sectioned parts under 30X minimum magnification for configuration compliance and compliance with specification requirements and good workmanship.

20.1.2 Data records. DPA findings that deviate from the specified configuration or other requirements shall be documented as defects.

20.1.3 Evaluation criteria. When the DPA is being conducted as a lot conformance test, the associated production lot shall be rejected if one or more of the DPA samples exhibit any of the defects listed below (as applicable to the type of part being examined):

a. Cracks in the body.

b. Cracks in the semiconductor material.

c. Discoloration or distortion of body or semiconductor material.

d. Contamination.

e. Wire-to-tab weld showing cracks or inadequate weld indentation.

f. Broken wire, or dents in the wire greater than one-sixth of the wire diameter.

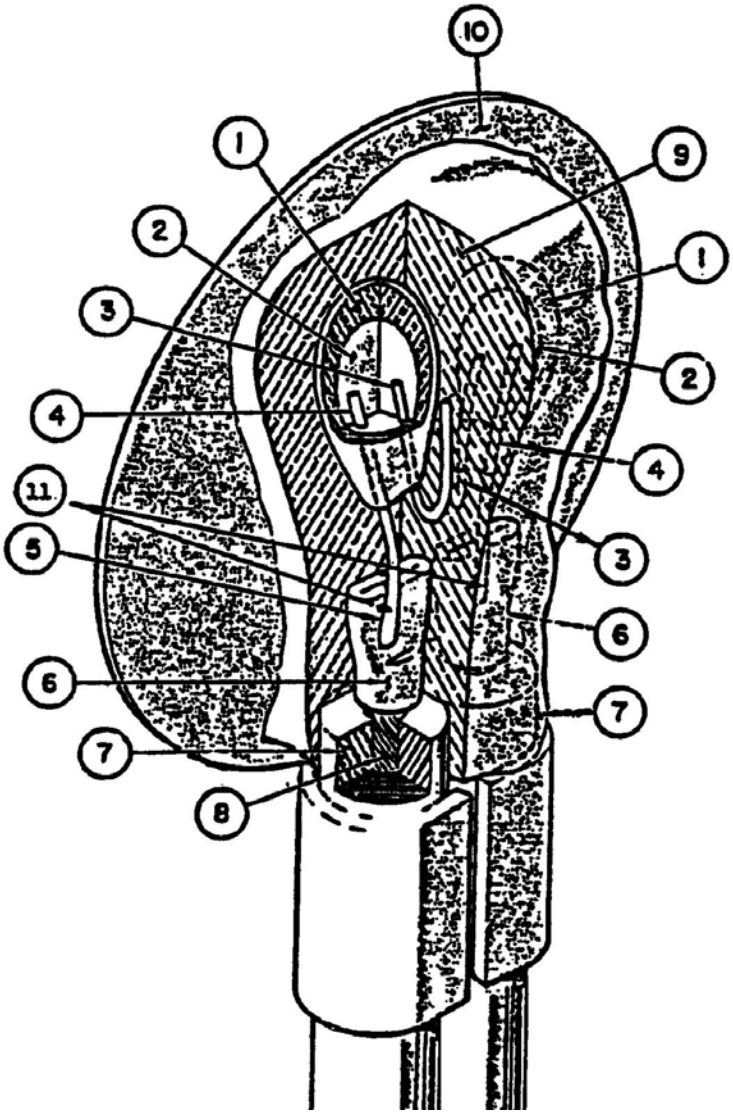

1	Glass Coat
2	Thermistor Element
3,4,5	Platinum Wire
6	Weld Tab
7	Insulation
8	Lead Wire
9	Cap
10	Mounting Plate
11	Wire Weld to Tab

FIGURE 20-1. Thermistor, glass body (typical).

20.2 Thermistor, disc and bead encapsulated (MIL-PRF-23648).

20.2.1 Method.

20.2.1.1 External visual. Perform visual inspection at 20X minimum magnification as in 10.1.1.1.

20.2.1.2 Sample preparation. Strip plastic coating or case from one-half of the samples, using a suitable solution, that exposes but does not attack the thermistor body and lead terminations. The remaining half shall be encapsulated and sectioned along the longitudinal axis to a depth that exposes the center leads.

20.2.1.3 Internal visual. Examine depotted and axially sectioned samples at 20X minimum magnification for configuration compliance, uniformity, cracks in the body, evidence of metallization on body of disc between lead attachment surfaces, lead insulation, and solder connections. Encapsulated units must be sectioned in a plane such that the connections between the lead and thermistor element are exposed.

20.2.2 Data records. DPA findings that deviate from the specified configuration or other requirements shall be documented as defects.

20.2.3 Evaluation criteria. When the DPA is being conducted as a lot conformance test, the associated production lot shall be rejected if one or more of the DPA samples exhibit any of the following defects:

a. Cracked body.

b. Evidence of metallization on body of disc between lead and attachment surfaces.

c. Cold solder or loose solder attachment of leads on disc.

d. Lead insulation not mechanically secured to prevent stress on soldered terminations.

e. Discoloration or contamination on body of disc.

REQUIREMENT 21

DETAILED REQUIREMENTS FOR TRANSISTORS

21. General. This section describes detailed requirements for a DPA of commonly used transistors. These requirements supplement the general requirements in section 4. Examples of typical configuration sketches are in method 2072, MIL-STD-750. When applicable, specification numbers or type numbers are referenced to assist in identification. Pre-DPA tests, such as functional tests and solderability tests, are assumed to have been satisfied by normal inspection and testing and are therefore not addressed.

21.1 Transistors (MIL-PRF-19500).

21.1.1 Method. The DPA shall be performed in accordance with method 2102 of MIL-STD-750 and as specified herein..

21.1.1.1 External visual examination. Perform an external visual examination at magnification of 15X or greater to adequately resolve the area being examined. Note any change from baseline drawings or any discrepancies. Take one representative photomacrograph of a sample device prior to sectioning and record any evidence of:

a. Damage, corrosion, or contamination.

b. Defects in seal or dents in package.

c. Defects in plating such as flaking, peeling, or blistering.

21.1.1.2 Hermetic seal. The transistors shall be tested according to method 1071 of MIL-STD-750. Fine leak testing shall be according to condition G or H. Gross leak testing shall be according to condition C, D, or E. No bubbles or fluorescent residue should be present.

21.1.1.3 Radiographic examination. Radiograph all samples in two views 90 degrees apart (x and y directions) in accordance with method 2076 of MIL-STD-750 and note any anomalies. Stud-mounted and axial-leaded devices shall also be X-rayed in both x and y directions.

21.1.1.4 PIND. Perform PIND testing on all samples in accordance with method 2052 of MIL-STD-750, condition A.

21.1.1.5 Internal water vapor testing/ RGA. Perform internal water vapor/RGA testing in accordance with method 1018 of MIL-STD-750. The sample size for this testing will be one for QPL/QML devices and three for non-QPL devices with zero failures or five devices with a maximum of one failure (3/0, 5/1). It is preferred that additional devices over and above the DPA samples be provided for this testing so that it may be processed in parallel to the DPA. If this cannot be done due to cost or availability issues, care should be taken to ensure that a minimal amount of damage results to the internal structures of the device during this test. Any damage caused by the intrusion of the puncturing tool into the cavity(s) of the device(s) shall be noted.

21.1.1.6 Suggested package delidding. Prior to opening, the height of the header should be determined from the manufacturer's photo expositional drawings or from previous radiographic examination. The lid should be carefully cut with a special can opener device designed specifically for that purpose (any equivalent available device may be used). The cut in the lid should be at a point sufficiently above the header so that the cover can be easily removed by hand. During cutting and removal of the lid, care must be exercised to avoid damage of internal elements or introduction of external contaminants into the internal enclosure area.

21.1.1.7 Crimp tubulation inspection (applicable to crimped lead devices only). A minimum 50 percent of the samples (round down) with leads that are crimped to the internal posts of the device shall be opened in a manner such that a crimp pull test can be performed between the post and the crimped area of the tubulation. The minimum pull test strength allowable shall be one pound and the data shall be recorded. A sample of the worst case crimp (visually observed) shall be mounted and cross-sectioned in a plane transverse to the longitudinal axis of the tubulation through the most mechanically compressed portion of the crimp. Metal to metal contact must be a minimum of 75 percent of the post wire circumference.

21.1.1.8 Internal visual (decap visual). Each sample device shall be subjected to decap visual examination, which is in accordance with method 2072 of MIL-STD-750.

a. Determination of "as delivered" device condition: This examination is verification that the device sealing process and 100-percent screening have not contaminated or otherwise adversely affected the devices.

b. Verification of pre-seal visual: This examination is a verification of the effectiveness of the pre-seal visual inspection for screening out rejectable devices. For DPA sample devices from inspection lots upon which pre-seal visual inspection has not previously been performed, this examination shall serve as a general assessment of the quality and internal condition of the devices in those particular lots.

21.1.1.9 Bond pull. Each device in the DPA sample shall undergo a destructive bond pull. All internal wire bonds or clip fasteners for each device shall be pulled to destruction according to method 2037 of MIL-STD-750. The maximum allowable pull rate shall be 0.05 Newtons (5 grams) per second. The minimum bond pull strength criteria shall be as specified in method 2037 of MIL-STD-750; results of the bond pull test shall be recorded.

21.1.1.10 SEM examination. SEM examination shall be performed to verify metallization step coverage in addition to documenting anomalous conditions in the previous portion of the DPA. The step coverage evaluation will be performed on 50 percent of the DPA samples (round down) or a minimum of two, whichever is greater. All expanded metallization devices shall be inspected. The evaluation will be performed in accordance with method 2077 of MIL-STD-750.

21.1.1.11 Die shear testing. A die bond shear test shall be the final DPA step and shall be conducted on 50 percent (round down) of the samples or a minimum of two, whichever is greater. Die shear testing shall be conducted as specified in method 2017 of MIL-STD-750. The maximum force applied, the location of the shear, and the percentage of the die still attached shall be recorded and entered in the DPA report. An image of all anomalous conditions noted during this test shall be recorded. These images shall be taken of the header in such a manner as to show the amount of die or attach material remaining.

REQUIREMENT 22

DETAILED REQUIREMENTS FOR SELECTED RF DEVICES

22. General. This section describes detailed requirements for a DPA of commonly used RF devices. These requirements supplement the general requirements in section 4. Examples of typical configuration sketches are included. When applicable, specification numbers or type numbers are referenced to assist in identification. Pre-DPA tests, such as functional tests and solderability tests, are assumed to have been satisfied by normal inspection and testing and are therefore not addressed.

22.1 Attenuators, coaxial.

22.1.1 Method.

22.1.1.1 External visual examination. Examine the attenuators at 20 X minimum magnification for defects in the external construction, marking, SMA connectors, and workmanship.

22.1.1.2 Radiography. Perform radiographic inspection to determine the orientation of the ceramic substrate within the device.

22.1.1.3 Disassembly. Disassemble one third of the devices (round up) by untorquing the SMA connectors on each end of the device. If the connectors are welded or epoxied into position, cut through the weld or attach area prior to disassembly. Subsequently , ground clip tension shall be tested by measuring the substrate pushout force. If not specified in the part control drawing, the minimum pushout force shall be two pounds. The substrate card and associated assemblies shall then be examined for any workmanship defects such as severe scratches in the resistor element or cracks in the substrate.

22.1.1.4 Cross-sectioning. One third (round down) of the devices shall be encapsulated in epoxy in an orientation which will allow the substrate card to be sectioned to reveal its end termination attachment points and which is in a plane incident to its flat dimension. The devices shall be sectioned in a plane parallel to the longitudinal axis of the devices. Care should be taken to backfill the internal cavity(s) of the device(s) during sectioning to support the internal substrate(s). Section to the midpoint of the attenuator body and examine the substrate card to SMA connector interface at a minimum of 100X magnification to ensure an adequate contact has been made (spring contact or solder pin attach). Any obvious defects in the attachment scheme shall be noted and images recorded. Examine for any other sign of workmanship deficiencies in the overall assembly.

22.1.1.5 Chemical dissolution. The remaining third of the devices shall be immersed in a 1:1 ratio mixture of nitric and hydrochloric acid (Aqua Regia) until the case, connectors, internal substrate mounting card assembly, and attached pins have been completely dissolved. The exposed ceramic attenuator substrate card shall then be inspected for any signs of cracking along all of its active surfaces. A dye penetrant or transmitted light technique shall be utilized. For devices with solder attached pin design, the inspection shall be focused on the pin attach area. Any surface cracks in the active resist area which exceed 0.12 mm (.005 inch) in length or penetrate more than half the depth of the substrate shall be cause for rejection.

22.1.2 Data records. DPA findings that deviate from the specified configuration or other requirements shall be documented as defects.

22.2 DC block/monitor tee.

22.2.1 Method.

22.2.1.1 External visual. Examine the devices at 20X minimum magnification for defects in the external construction, marking, SMA connectors, and workmanship.

22.2.1.2 Cross-sectioning. All of the devices shall be encapsulated in an orientation allowing for sectioning in a plane parallel to the longitudinal axis of the device. Care should be taken to backfill any internal cavities to support the internal members. Section to the midpoint of the device and examine the DC load to SMA connector interfaces at a minimum of 100X magnification to ensure an adequate contact has been made (spring contact and metal to metal contact). Any obvious defects in the attachment scheme shall be noted and images recorded. Examine for any other sign(s) of workmanship deficiencies in the overall assembly.

22.2.2 Data records. DPA findings that deviate from the specified configuration or other requirements shall be documented.

22.3 Detectors, coaxial and waveguide.

22.3.1 Method.

22.3.1.1 External visual. Examine the devices at 20X minimum magnification for defects in the external construction, marking, SMA connectors, and workmanship.

22.3.1.2 Radiography. Perform radiographic inspection in two views in accordance with method 2012 of MIL-STD-883. Use radiographs as an aid in the delid process.

22.3.1.3 Disassembly. Disassemble all of the devices by untorquing the SMA connectors on each end of the device. If the connectors are welded or epoxy staked into position, cut through the weld or staking area prior to disassembly. Carefully remove the barrel assembly. Delid the barrel assembly carefully so that no damage is introduced to the interior. Perform a visual inspection in accordance with method 2017 of MIL-STD-883 as appropriate. In addition, examine for any other deficiencies in the device workmanship.

22.3.1.4 Bond pull testing. Perform bond pull tests on all wire bonds in accordance with method 2011 of MIL-STD-883, condition D.

22.3.1.5 SEM. Perform SEM inspection of all internal attachments (bonds, die attachments, solder joints, etc.). Additionally, perform SEM inspection in accordance with 16.1.1.8 herein on all discrete expanded metallization semiconductor die.

22.3.1.6 Die shear testing. Perform die shear testing, as appropriate, in accordance with method 2019 of MIL-STD-883 on 50 percent of the device within the lot (round down).

22.3.2 Data records. DPA findings that deviate from the specified configuration or other requirements shall be documented.

REQUIREMENT 23

DETAILED REQUIREMENTS FOR FUSES

23. General. This section describes detailed requirements for a DPA of commonly used fuses. These requirements supplement the general requirements in section 4. Examples of typical configuration sketches are included. When applicable, specification numbers or type numbers are referenced to assist in identification. Pre-DPA tests, such as functional tests and solderability tests, are assumed to have been satisfied by normal inspection and testing and are therefore not addressed.

23.1 Fuses, instrument, power, and telephone (MIL-PRF-15160).

23.1.1 Method.

23.1.1.1 External visual. Perform an external visual examination of the devices and record any obvious defects in marking or workmanship of the devices.

23.1.1.2 Disassembly. Disassemble 50 percent of the device (round up) by scribing circumferentially around the center of the cylindrical body with a sharp diamond or carbide scribe. Snap the device(s) in two by applying a three-point bend force to each end of the device. Examine the interior of each end of the device(s) in accordance with the criteria of 23.1.3.

23.1.1.3 Cross-sectioning. Encapsulate the remaining devices in a clear epoxy and begin sectioning in a plane parallel to the longitudinal axis of the device. Upon opening the internal cavity, inspect the devices in accordance with 23.1.3. Then backfill the cavity with epoxy to ensure adequate mechanical support for the internal member. Continue sectioning to the midpoint of the end caps and leads. Inspect the sectioned devices in accordance with 23.1.3.

23.1.2 Data records. DPA findings that deviate from the specified configuration or other requirements shall be documented.

23.1.3 Visual inspection criteria. The following defects will be considered unacceptable.

a. Evidence of corrosion of the fuse element or end caps.

b. Fuse element not adequately soldered to the end cap.

c. End caps not adequately attached to body of device.

d. Loose or potentially loose foreign particles or solder balls greater than 0.12 mm (.005 inch) in length inside the cavity of the device(s).

23.2 Fuses, glass and ceramic substrate style.

23.2.1 Method.

23.2.1.1 External visual. Perform an external visual examination of the devices and record any obvious defects in marking or workmanship of the devices.

23.2.1.2 Radiography. Perform radiographic inspection in two perpendicular planes to determine the orientation of the substrate in the case and to detect voids in the case (potting) material. See figures 23-2 and 23-3 for acceptance and rejection criteria.

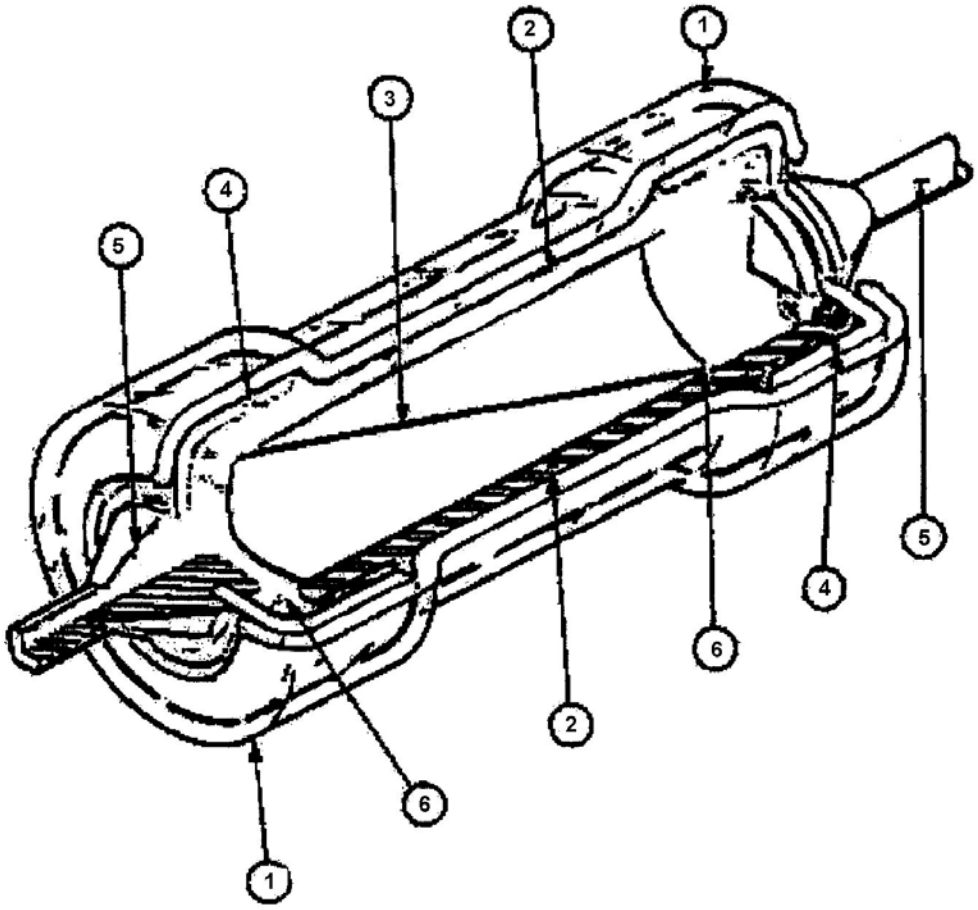

1 Outer Plastic Sleeve
2 Ceramic/Glass Body
3 Fuse element
4 End Cap
5 Lead (Terminals)
6. Solder

(See Table 17-1)

FIGURE 23-1. Example of typical instrument, power, and telephone fuse.

23.2.2 Fuses with glass substrates.

23.2.2.1 Disassembly. Lap the fuse material to the surface of the glass substrate opposite the lead attachments.

a. Using a magnification of 10X minimum, inspect the deposited resistance element for adhesion to the glass substrate. Cracks in the resistance element or lifting of the element shall be considered unacceptable.

b. Using a magnification of 10X minimum, inspect metallization-bonding areas for alignment with the adhesion of the resistance element.

c. Using a magnification of 10X minimum, inspect for conchoidal fractures. A conchoidal fracture starts on one surface, intrudes into the interior of the substrate and if carried to its conclusion, returns to the same surface. Conchoidal fractures in the substrate (glass) between the lead and the fuse element that extend more than 50 percent of the lead are unsatisfactory.

d. Remove the remaining case material with a suitable solvent and using 10X minimum, inspect lead solder connections for smoothness and proper wetting. Evidence of cold solder joints or cracks in the solder shall be unacceptable.

23.2.2.2 Data records. DPA findings that deviate from the specified configuration or other requirements shall be documented.

23.2.3 Fuses with ceramic substrates and epoxy encapsulant.

23.2.3.1 Method.

23.2.3.1.1 Cross-sectioning (group 1). Encapsulate one third of the samples (round up) in epoxy and section longitudinally through the center of one lead and inspect for the following:

a. Adequate attachment at the lead to substrate.

b. Evidence of fractures within the solder joint or substrate. Ceramic substrate scribe marks shall not be cause for rejection.

c. Evidence of contamination.

d. Solder voids shall not exceed 25 percent of the solder cross-sectional area.

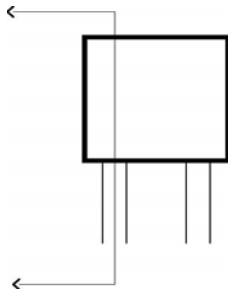

Group 1 plane of section.

23.2.3.1.2 Cross-sectioning (group 2). Encapsulate one third of the samples (round down) in epoxy and section transversely through the center of the fuse package perpendicular to the lead axis and inspect for the following:

a. Pinholes > 0.25 mm (.010 inch) in length in the arc suppressant material.

b. Evidence of contamination.

c. Evidence of fractures within the solder joint or substrate. Ceramic substrate scribe marks shall not be cause for rejection.

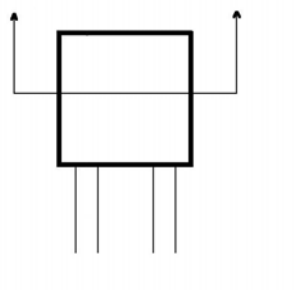

Group 2 plane of section.

23.2.3.1.3 Cross-sectioning (group 3) Encapsulate the remaining samples in epoxy and section/lap into the face of the fuse package into the back of the fuse substrate. Stop sectioning when the substrate is thin enough to inspect the fuse element through the thin remaining ceramic. Inspect for the following:

a. Voids in the epoxy.

b. Examine the substrate for conchoidal or other type cracks.

c. Examine the fuse element for pinholes or other anomalies.

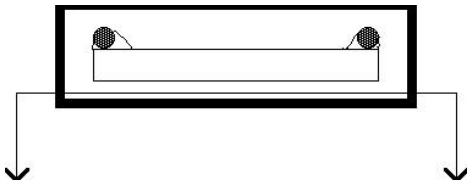

Group 3 plane of section.

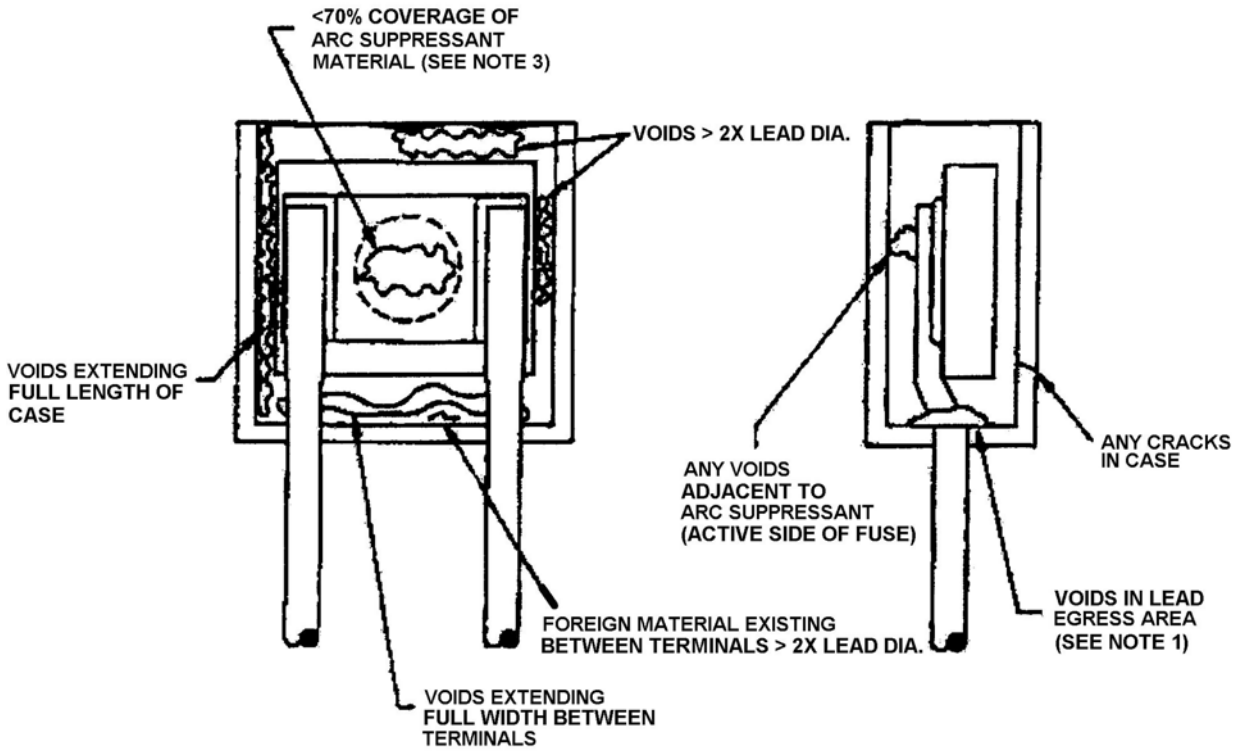

NOTES:

1. VOIDS IN LEAD EGRESS AREA SHALL NOT EXCEED 50% OF THE DISTANCE BETWEEN THE CASE BOTTOM AND THE SUBSTRATE.

2. VOIDS EXISTING BETWEEN TERMINALS THAT ARE > 2X LEAD DIA. ARE REJECTABLE.

3. PIN HOLES < 0.010” IN THE ARC SUPPRESSANT MATERIAL ARE REJECTABLE.

4. ELONGATED VOIDS THAT RUN FULL LENGTH OF THE CASE OR ANY ELONGATED VOID RUNNING PARALLEL TO AND WITHIN 0.005” OF THE LEAD FROM BOTTOM OR SUBSTRATE TO BOTTOM OF CASE IS REJECTABLE.

5. VOIDS > 3X LEAD DIAMETER ARE REJECTABLE.

6. ORIENTATION OF SUBSTRATE IS NOT CRITICAL UNLESS SUBSTRATE PROTRUDES OUTSIDE OF CASE OR RESTS ON BOTTOM OF CASE.

FIGURE 23-2. Rejection criteria.

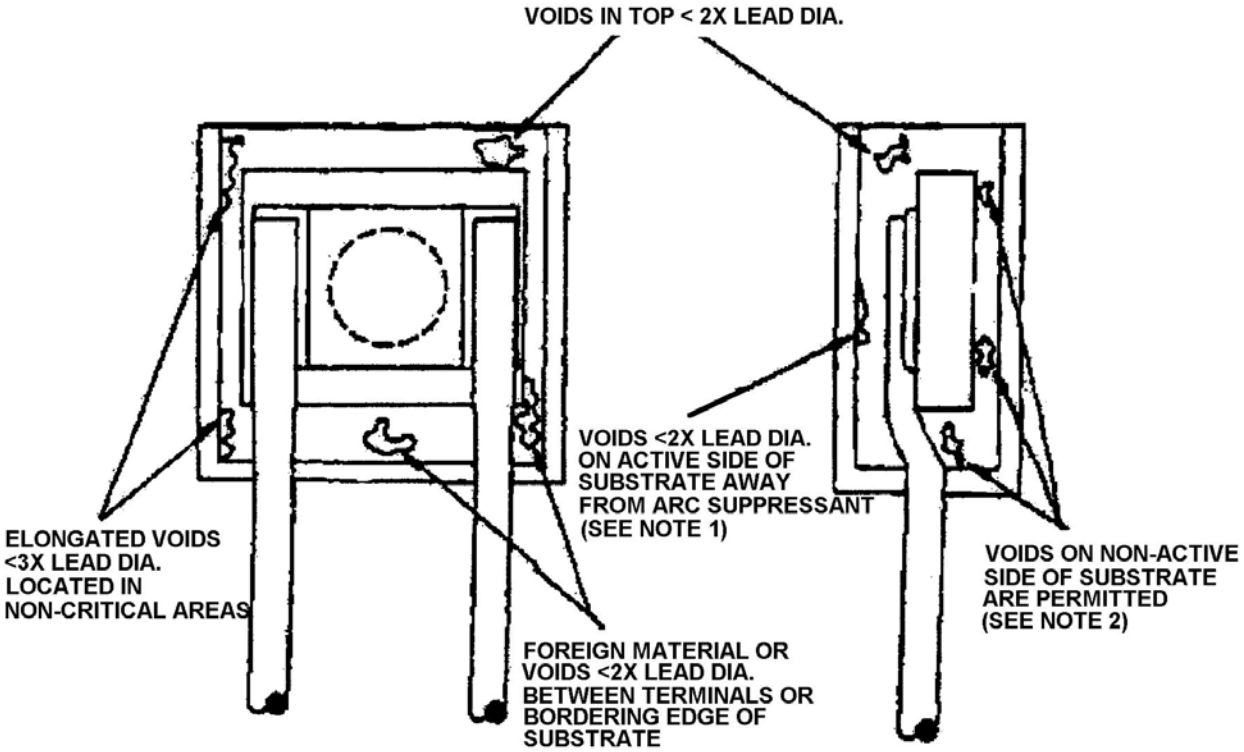

NOTES:

1. VOIDS OR FOREIGN MATERIAL EXISTING BETWEEN THE CASE AND THE ACTIVE SIDE OF SUBSTRATE ARE ACCEPTABLE PROVIDED THEY ARE LESS THAN 2X LEAD DIA. IN SIZE AND A DEFINITE SEPARATION BETWEEN THE VOID AND TERMINAL CAN BE DETECTED ON THE EDGE VIEW OF THE RADIOGRAPH.

2. VOIDS OR FOREIGN MATERIAL ARE PERMISSIBLE TO THE EXTENT THAT THEY ARE LOCATED IN NON-CRITICAL AREAS AND THE TOTAL AREA OF VOIDS DOES NOT EXCEED 30% VOLUME OF THE CASE.

3. EPOXY FILL LINES ARE ACCEPTABLE.

4. CRITICAL AREAS SHALL BE DEFINED AS THE AREA BEHIND THE ACTIVE SIDE OF SUBSTRATE (AREA WITHIN DASHED CIRCLE ABOVE), AREA BETWEEN TERMINALS, AND THE LED EGRESS AREA.

FIGURE 23-3. Rejection criteria.

REQUIREMENT 24

DETAILED REQUIREMENTS FOR HEATERS

24. General. This section describes detailed requirements for a DPA of commonly used flexible heaters. These requirements supplement the general requirements in section 4. Examples of typical configuration sketches are included. When applicable, specification numbers or type numbers are referenced to assist in identification. Pre-DPA tests, such as functional tests and solderability tests, are assumed to have been satisfied by normal inspection and testing and are therefore not addressed.

24.1 Heaters, flexible strip.

24.1.1 Method.

24.1.1.1 External visual. Perform an external visual examination of the exterior and document any anomalous conditions listed in 24.1.3.

24.1.1.2 Electrical testing. Perform low power input resistance in accordance with method 303 of MIL-STD-202.

24.1.1.3 Terminal strength. Perform terminal strength in accordance with method 209 of MIL-STD-202, condition A. The weight applied along the lead axis shall be three pounds. The duration of the applied load will be 3 minutes minimum. Examine devices for any evidence of loosening or fracturing of the lead attachment. Also look for delaminations in the heater element.

24.1.1.4 Post terminal strength electrical testing. Perform electrical testing in accordance with 24.1.1.2. Results, which fall outside device tolerances, will be unacceptable.

24.1.1.5 Lead attachment verification. Encapsulate 50 percent of the devices in a clear epoxy and cross-section across the lead attachment joints and examine for weld joint integrity. Any evidence of loosening, tearing, corrosion, or contamination at the interface shall be unacceptable.

24.1.2 Data records. DPA findings that deviate from the specified requirements shall be documented as defects.

24.1.3 Evaluation criteria. The following defects will be considered unacceptable,

a. More than 30 percent reduction in effective conductor.

b. Less than 0.05 mm (.002 inch) or 25 percent of the average separation between non-common conductors.

c. Insulating coating not completely shielding the dissipating element.

d. Conductive particles bridging adjacent non-common conducting elements.

STANDARDIZATION DOCUMENT IMPROVEMENT PROPOSAL

INSTRUCTIONS

1. The preparing activity must complete blocks 1, 2, 3, and 8. In block 1, both the document number and revision letter should be given.

2. The submitter of this form must complete blocks 4, 5, 6, and 7, and send to preparing activity.

3. The preparing activity must provide a reply within 30 days from receipt of the form.
NOTE: This form may not be used to request copies of documents, nor to request waivers, or clarification of requirements on current contracts. Comments submitted on this form do not constitute or imply authorization to waive any portion of the referenced document(s) or to amend contractual requirements.

I RECOMMEND A CHANGE:	1. DOCUMENT NUMBER MIL-STD-1580B	2. DOCUMENT DATE 7 January 2003

3. DOCUMENT TITLE:
TEST METHOD STANDARD, DESTRUCTIVE PHYSICAL ANALYSIS FOR ELECTRONIC, ELECTROMAGNETIC AND ELECTROMECHANICAL PARTS

4. NATURE OF CHANGE (Identify paragraph number and include proposed rewrite, if possible. Attach extra sheets as needed.)

5. REASON FOR RECOMMENDATION

6. SUBMITTER		
a. NAME (Last, First, Middle initial)	b. ORGANIZATION	
c. ADDRESS (Include Zip Code)	d. TELEPHONE (Include Area Code) (1) Commercial (2)DSN (if applicable)	7. DATE SUBMITTED (YYMMDD)

8. PREPARING ACTIVITY		
a. NAME DSCC-VAT	b. TELEPHONE (Include Area Code) (1) Commercial 614-692-0557	 (2) DSN 850-0557
c. ADDRESS (Include Zip Code) Defense Supply Center Columbus P.O. BOX 3990 Columbus, OH 43216-5000	IF YOU DO NOT RECEIVE A REPLY WITHIN 45 DAYS, CONTACT: Defense Standardization Program Office Attn: J-330, Suite 4235 8725 John J. Kingman Road, Suite 2533 Fort Belvoir, Virginia 22060-6221 Telephone (703) 767-6888 DSN 427-6888	