MIL-STD-1669

5 SEPTEMBER 1975

MILITARY STANDARD

INSERT ARRANGEMENTS FOR MIL-C-26482

ENVIRONMENT RESISTING, CIRCULAR, ELECTRICAL CONNECTORS

FSC 5935

DEPARTMENT OF DEFENSE
WASHINGTON, D.C. 20301

Insert Arrangements for MIL-C-26482 Environment Resisting, Circular, Electrical Connectors

MIL-STD-1669

1. This military standard is approved for use by all Departments and Agencies of the Department of Defense.

2. Recommended corrections, additions, or deletions should be addressed to the Commanding Officer, Naval Air Systems Command, Code 533D, Washington, D.C. 20360.

CONTENTS

Paragraph		Page
1.	SCOPE	1
2.	REFERENCED DOCUMENTS	1
3.	DEFINITIONS	1
4.	GENERAL REQUIREMENTS	1
5.	DETAIL REQUIREMENTS	1
5.1	Dimensions	1
5.2	Main key or keyway polarization	2
5.3	Contacts	2
5.4	Marking	2

SECTIONS

Section		
10	Shell Size 8	10.1
20	Shell Size 10	20.1
30	Shell Size 12	30.1
40	Shell Size 14	40.1
50	Shell Size 16	50.1
60	Shell Size 18	60.1
70	Shell Size 20	70.1
80	Shell Size 22	80.1
90	Shell Size 24	90.1

1. SCOPE

1.1 This standard covers insert arrangements for use with MIL-C-26482 environment resisting, circular, electrical connectors.

2. REFERENCED DOCUMENTS

2.1 The issues of the following documents in effect on the date of invitation for bids forms a part of this standard to the extent specified herein.

SPECIFICATIONS

MILITARY

MIL-C-26482 - Connectors, Electrical, (Circular, Miniature, Quick Disconnect, Environment Resisting), Receptacles and Plugs, General Specication For.

(Copies of specifications, standards, drawings and publications required by suppliers in connection with specific procurement functions should be obtained from the procuring activity or as directed by the contracting officer.)

2.2 Other publications. The following document forms a part of this standard to the extent specified herein.

ANSI Y14.5-1973 - Dimensioning and Tolerancing.

(Application for copies should be addressed to American Standards Institute, 1430 Broadway, New York, NY 10018).

3. DEFINITIONS

3.1 The terms used in this standard are generally accepted by the electrical and electronics industries and commonly used in electrical connector engineering practice.

4. GENERAL REQUIREMENTS

Not applicable.

5. DETAIL REQUIREMENTS

5.1 Dimensions. Dimensions shall be in accordance with the applicable section of this standard and the following dimensional data:

(a) Dimensioning and tolerancing in accordance with ANSI Y14.5-1973. Dimensions are true position and are in inches.
(b) Metric equivalents (to the nearest .01 mm) are given for general information only and are based upon 1 inch = 25.4 mm.
(c) Dimensions and markings shown are for engaging face of pin insert, socket insert is opposite.
(d) The following tolerances apply to insert installed in shell:
  1. Center of each hole in insert shall be located at true position within .014 dia. Ⓜ .014 dia.
  2. Center of engaging end of each contact shall be located at true position within .024 dia. Ⓜ .024 dia.
(e) Unless otherwise indicated, dimensions are symmetrical about centerline.

5.2 Main key or keyway polarization.

(a) Each insert arrangement is shown in the "normal position" in the shell.
(b) The "master key or keyway" of the shell and the "indexing radius of the insert" are as shown in figure 1.

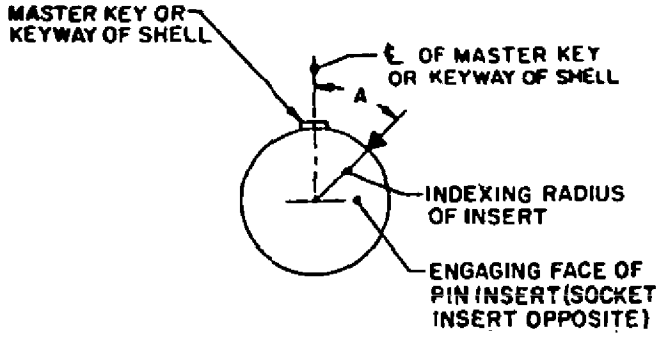

FIGURE 1. Insert position.

(c) In the "normal position" the indexing radius coincides with ℄ of the "master key or keyway of the shell".
(d) In "alternate insert positions" the pin insert is rotated "A" degrees clockwise relative to ℄ of "master key or keyway of shell" as indicated.
(e) In "alternate insert positions" the socket insert is rotated "A" degrees counter-clockwise relative to ℄ of the "master key or keyway of shell".
(f) See applicable section of this standard for insert positions.
(g) Four keys or keyways (MMC) and insert shall be located within .0035 either side of (TP) relative to master key or keyway (MMC) and shell OD or ID (MMC).

5.3 Contacts. Solder contacts shall be in accordance with MIL-C-26482. Crimp contacts shall be in accordance with the applicable document as specified in table I.

TABLE I. Crimp contacts.

Contact size	Applicable document	
	Series 1	Series 2
20 Power	MS3192, MS3193	MIL-C-39029/4, MIL-C-39029/5
16 Power	MS3192, MS3193	MIL-C-39029/4, MIL-C-39029/5
12 Power	MS3192, MS3193	MIL-C-39029/4, MIL-C-39029/5
12 Shielded	MIL-C-39029/25, MIL-C-39029/26	MIL-C-39029/7, MIL-C-39029/8
8 Shielded	MIL-C-39029/23, MIL-C-39029/24	---
20 Thermocouple	---	MIL-C-39029/9, MIL-C-39029/10
20 Hermetic (class N)	---	MIL-C-39029/15
16 Hermetic (class N)	---	MIL-C-39029/15

5.4 Marking. Marking shall be in accordance with MIL-C-26482 and as shown in the applicable section of this standard.

Custodians:
Army - EL
Navy - AS
Air Force - 85

Review activities:
Army - EL, MI, MU
Navy - EC, SH
Air Force - 11, 17

User activities:
Army - AV
Navy -
Air Force -

Preparing activity:
Navy - AS

Agent:
DSA - ES

(Project 5935-1947-36)

SECTION 10

SHELL SIZE 8

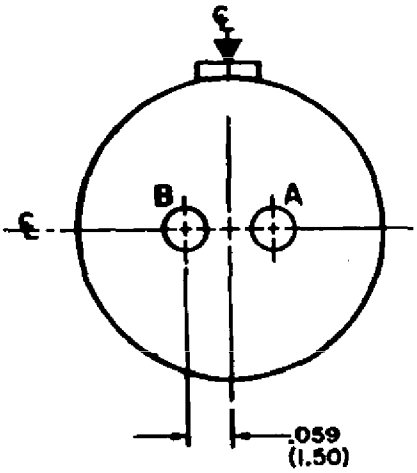

ALTERNATE INSERT POSITIONS			
A DEGREES			
W	X	Y	Z
58	122	—	—

Shell size	Arrangement number	Number of contacts	Size contacts	Service rating	Contact location	Superseded document
8	[illegible]	[illegible]	20	1	A11	MS33708-2

INACTIVE FOR DESIGN AFTER 11 AUG 1967
NO SUPERSEDING STANDARD.

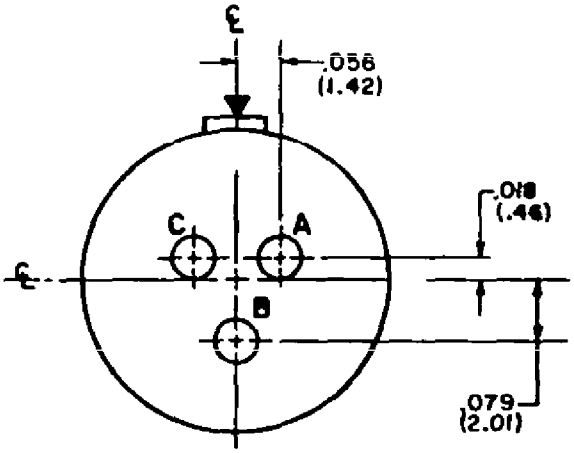

ALTERNATE INSERT POSITIONS			
A DEGREES			
W	X	Y	Z
60	210	—	—

Shell size	Arrangement number	Number of contacts	Size contacts	Service rating	Contact location	Superseded document
8	3	3	20	I	All	MS33708-3

INACTIVE FOR DESIGN AFTER 1 NOV 1985

NO SUPERSEDING STANDARD.

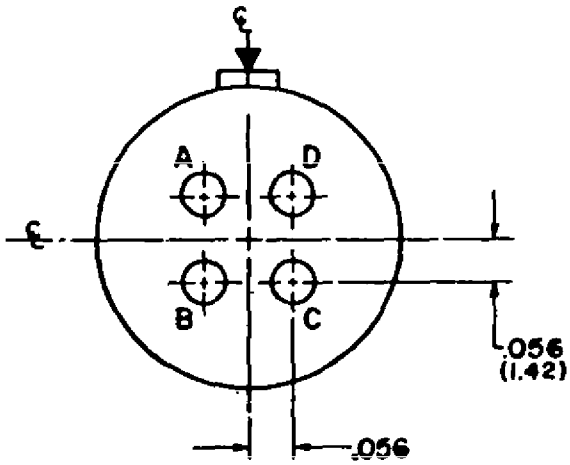

ALTERNATE INSERT POSITIONS			
A DEGREES			
W	X	Y	Z
45	—	—	—

Shell size	Arrangement number	Number of contacts	Size contacts	Service rating	Contact location	Superseded document
8	4	4	20	I	All	MS33708-4

INACTIVE FOR DESIGN AFTER 1 NOV 1985

NO SUPERSEDING STANDARD.

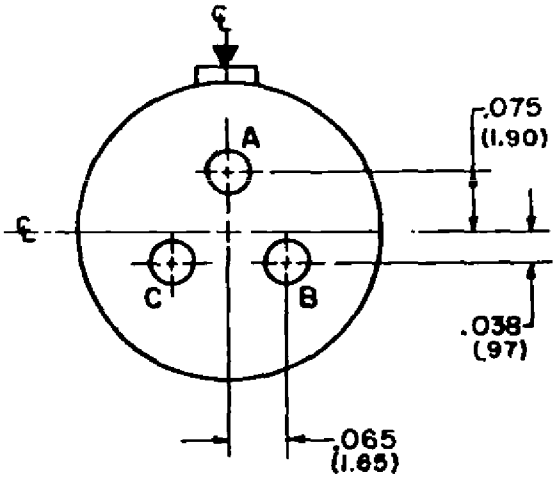

ALTERNATE INSERT POSITIONS			
A DEGREES			
W	X	Y	Z
90	—	—	—

Shell size	Arrangement number	Number of contacts	Size contacts	Service rating	Contact location	Superseded document
8	33	3	20	I	All	MS33708-33

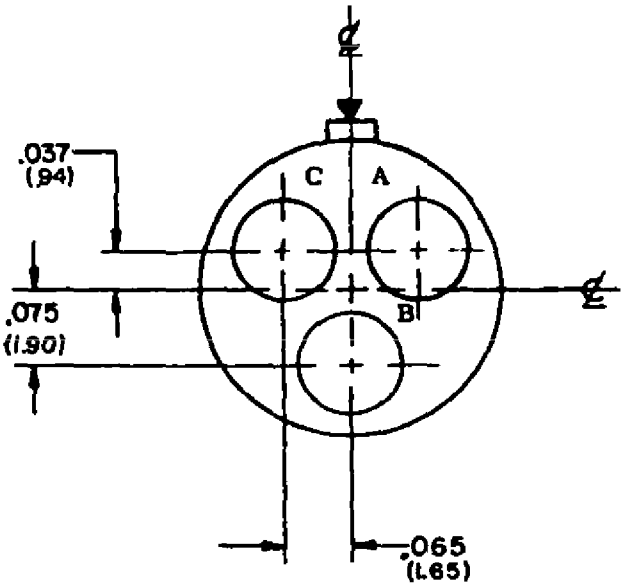

ALTERNATE INSERT POSITIONS			
A DEGREES			
W	X	Y	Z
—	—	—	—

Shell size	Arrangement number	Number of contacts	Size contacts	Service rating	Contact location	Superseded document
8	98	3	20	I	All	MS33708-98

SECTION 20

SHELL SIZE 10

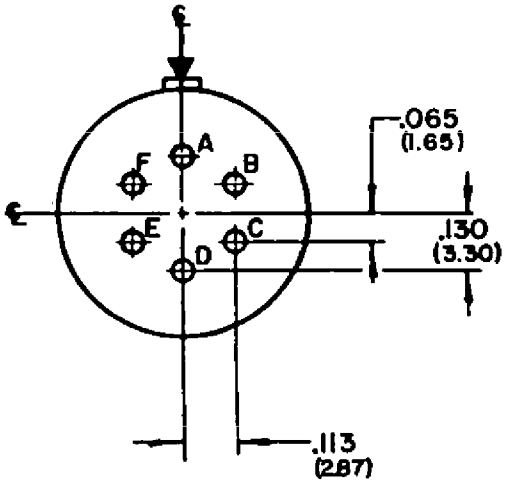

ALTERNATE INSERT POSITIONS			
A DEGREES			
W	X	Y	Z
90	—	—	—

Shell size	Arrangement number	Number of contacts	Size contacts	Service rating	Contact location	Superseded document
10	6	6	20	1	All	MS33709-6

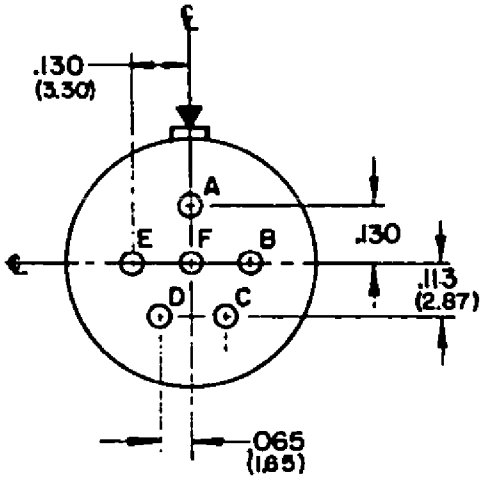

Alternate insert positions			
A degrees			
W	X	Y	Z
90	180	240	270

Shell size	Arrangement number	Number of contacts	Size contacts	Service rating	Contact location	Superseded document
10	98	6	20	1	All	MS33709-98

SECTION 30

SHELL SIZE 12

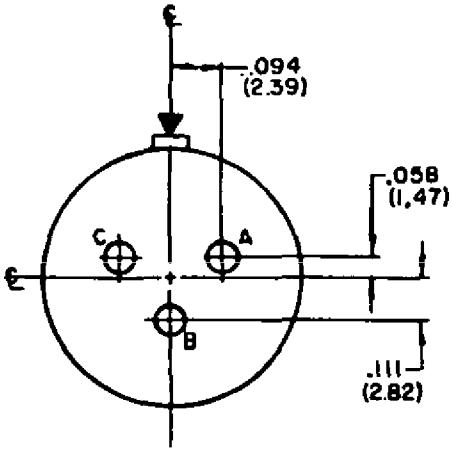

Alternate insert positions			
A degrees			
W	X	Y	Z
---	---	180	---

Shell size	Arrangement number	Number of contacts	Size contacts	Service rating	Contact location	Superseded document
12	3	3	16	II	All	MS33710-3

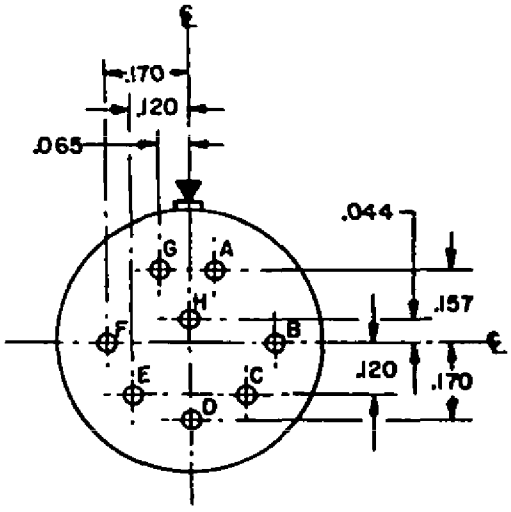

INCHES	MM
.044	1.12
.065	1.65
.120	3.05
.157	3.99
.170	4.32

Alternate insert positions			
A degrees			
W	X	Y	Z
90	112	203	292

Shell size	Arrangement number	Number of contacts	Size contacts	Service rating	Contact location	Superseded document
12	8	8	20	I	All	MS33710-8 MS27727-8

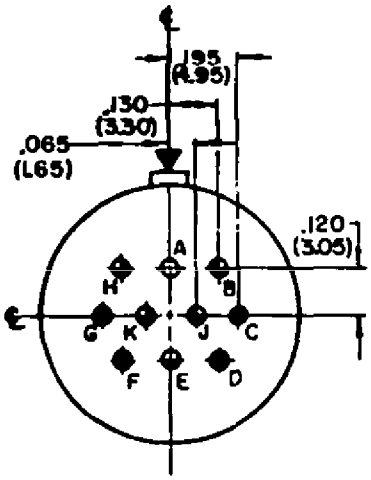

Alternate insert positions			
A degrees			
W	X	Y	Z
60	155	270	295

Shell size	Arrangement number	Number of contacts	Size contacts	Service rating	Contact location	Superseded document
12	10	10	20	I	All	MS33710-10

SECTION 40

SHELL SIZE 14

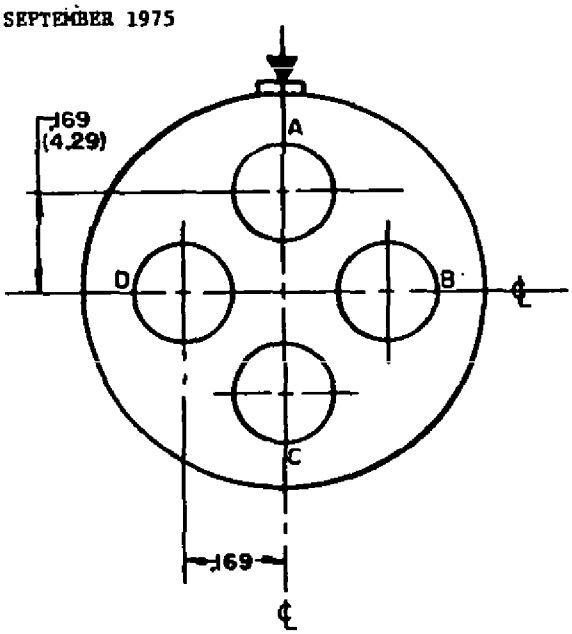

ALTERNATE INSERT POSITIONS			
A DEGREES			
W	X	Y	Z
45	—	—	—

Shell size	Arrangement number	Number of contacts	Size contacts	Service rating	Contact location	Superseded document
14	4	4	12 Power	I	All	MS33711-4

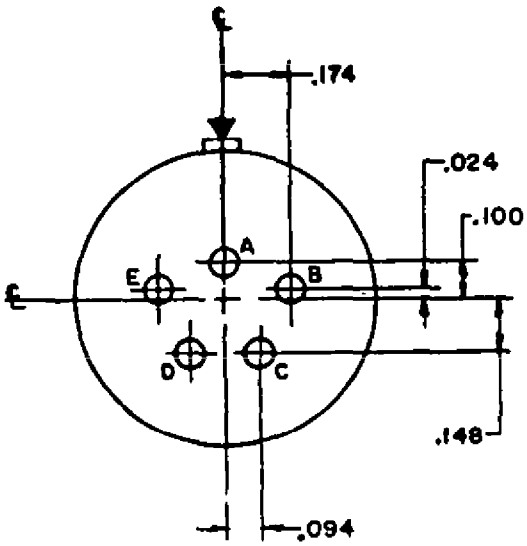

Alternate insert positions			
A degrees			
W	X	Y	Z
40	92	184	273

INCHES	MM
.024	.61
.094	2.39
.100	2.54
.148	3.76
.174	4.42

Shell size	Arrangement number	Number of contacts	Size contacts	Service rating	Contact location	Superseded document
14	5	5	16	II	All	MS33711-5

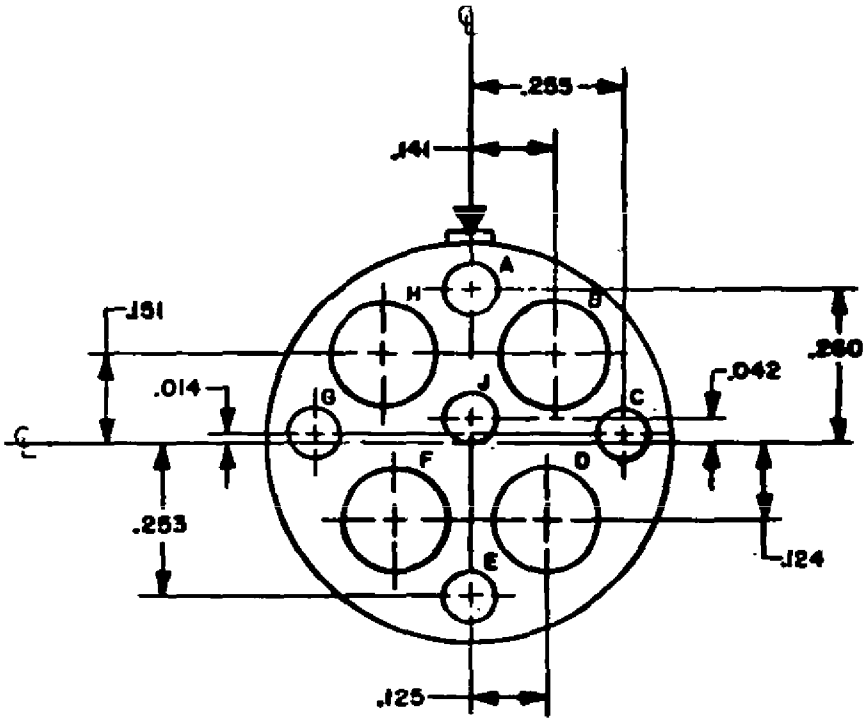

Alternate insert positions			
A degrees			
W	X	Y	Z
15	90	180	240

INCHES	MM
.014	.36
.042	1.07
.124	3.15
.125	3.18
.141	3.58
.151	3.83
.253	6.43
.255	6.48
.260	6.60

Shell size	Arrangement number	Number of contacts	Size contacts	Service rating	Contact location	Superseded document
14	9	5	20	I	A,C,E,G,J	MS33711-9
		4	12 Power		B,D,F,H	

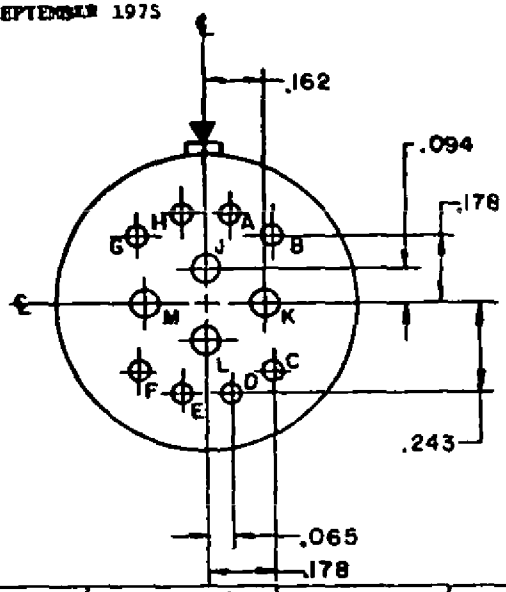

Alternate insert positions			
A degrees			
W	X	Y	Z
43	90	---	---

INCHES	MM
.065	1.65
.094	2.39
.162	4.11
.178	4.52
.243	6.17

Shell size	Arrangement number	Number of contacts	Size contacts	Service rating	Contact location	Superseded document
14	12	4	16	I	J,K,L,M	MS33711-12
		8	20		Remainder	

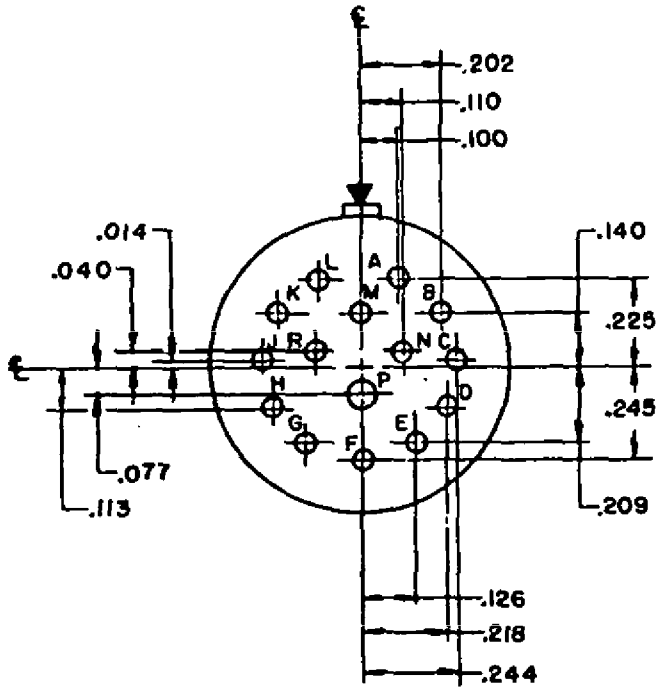

Alternate insert positions			
A degrees			
W	X	Y	Z
17	110	155	234

INCHES	MM	INCHES	MM
.014	.36	.140	3.56
.040	1.02	.202	5.13
.077	1.96	.209	5.31
.100	2.54	.218	5.54
.110	2.79	.225	5.71
.113	2.87	.244	6.20
.126	3.20	.245	6.22

Shell size	Arrangement number	Number of contacts	Size contacts	Service rating	Contact location	Superseded document
14	15	1	16	I	P	MS33711-15
		14	20		Remainder	

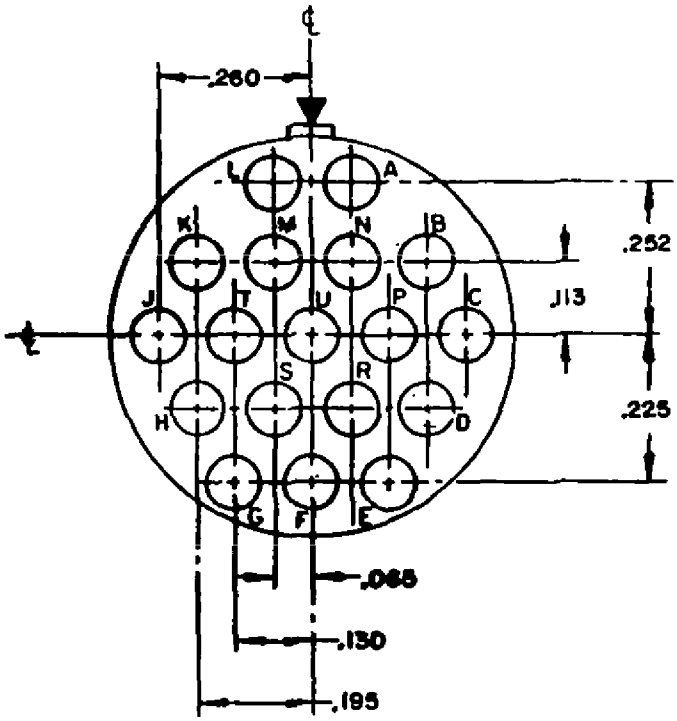

Alternate insert positions			
A degrees			
W	X	Y	Z
15	90	180	270

INCHES	MM
.065	1.65
.113	2.87
.130	3.30
.195	4.95
.225	5.71
.252	6.40
.260	6.60

Shell size	Arrangement number	Number of contacts	Size contacts	Service rating	Contact location	Superseded document
14	18	18	20	I	All	MS33711-18 MS27728-18

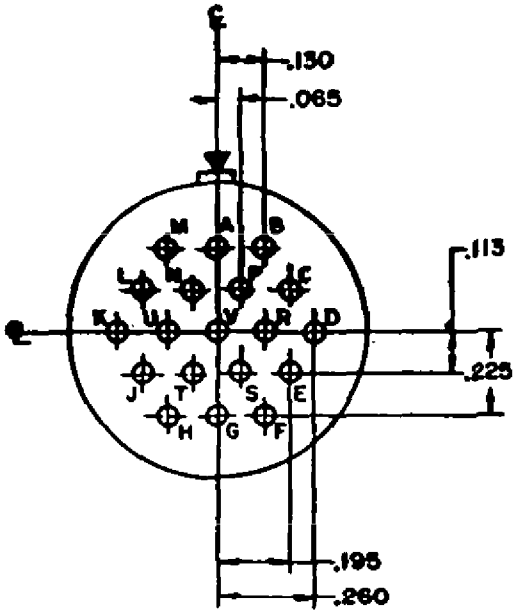

Alternate insert positions			
A degrees			
W	X	Y	Z
30	165	315	---

INCHES	MM
.065	1.65
.113	2.87
.130	3.30
.195	4.95
.225	5.71
.260	6.60

Shell size	Arrangement number	Number of contacts	Size contacts	Service rating	Contact location	Superseded document
14	19	19	20	I	All	MS33711-19

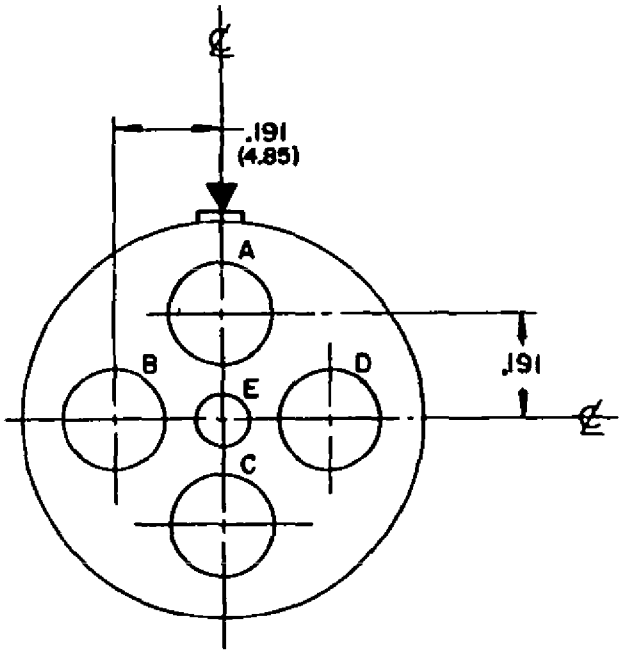

ALTERNATE INSERT POSITIONS			
A DEGREES			
W	X	Y	Z
45	—	—	—

Shell size	Arrangement number	Number of contacts	Size contacts	Service rating	Contact location	Superseded document
14	22	4	12	I	A,B,C,D	MS33711-22
		1	20		E	

SECTION 50

SHELL SIZE 16

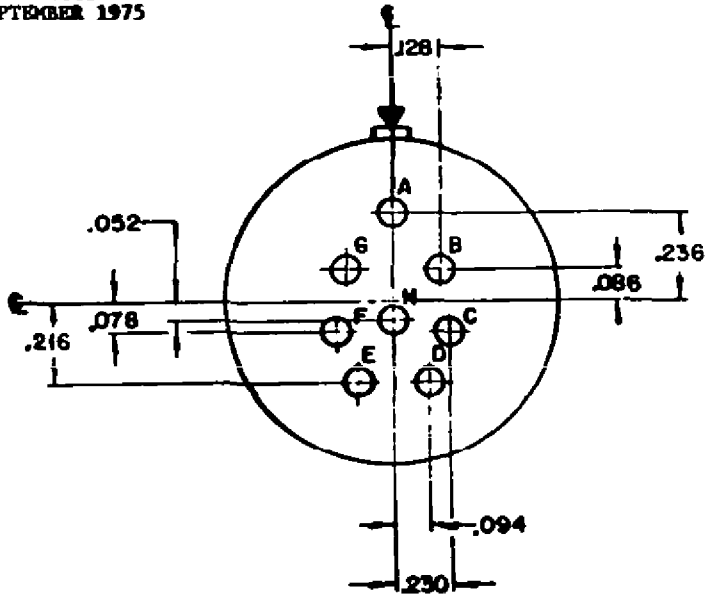

Alternate insert positions			
A degrees			
W	X	Y	Z
54	152	180	331

INCHES	MM
.052	1.32
.078	1.98
.086	2.18
.094	2.39
.128	3.25
.216	5.49
.230	5.80
.236	5.99

Shell size	Arrangement number	Number of contacts	Size contacts	Service rating	Contact location	Superseded document
16	8	8	16	II	All	MS33712-8

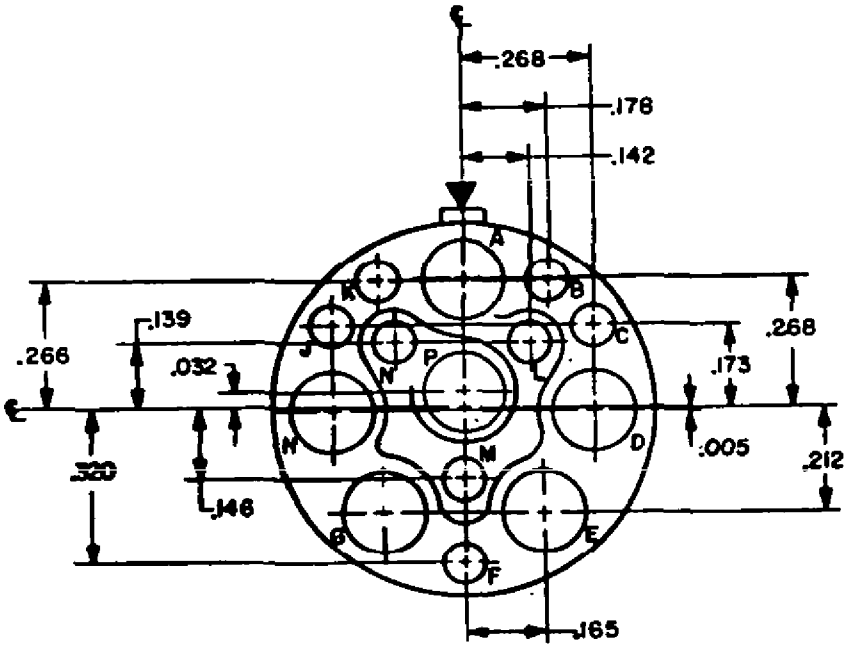

Alternate insert positions			
A degrees			
W	X	Y	Z
25	78	180	240

INCHES	MM
.005	.13
.032	.81
.139	3.53
.142	3.61
.146	3.71
.165	4.19
.173	4.39
.178	4.52
.212	5.38
.266	6.76
.268	6.81
.320	8.13

Shell size	Arrangement number	Number of contacts	Size contacts	Service rating	Contact location	Superseded document
16	14	8	20	I	B,C,F,J,K,L,M,N	MS33712-14
		6	12		A,D,E,G,H,P	

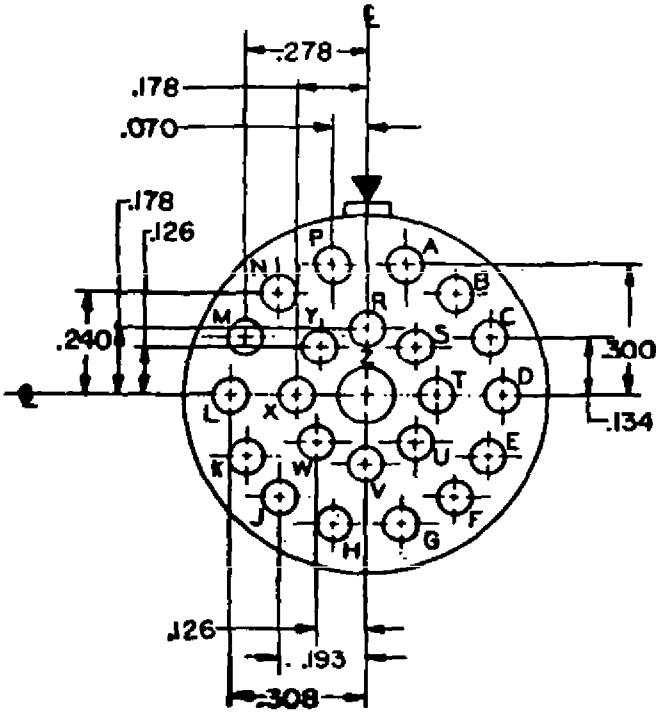

Alternate insert positions			
A degrees			
W	X	Y	Z
158	270	---	---

INCHES	MM
.070	1.79
.126	3.20
.134	3.40
.178	4.52
.193	4.90
.240	6.10
.278	7.06
.300	7.62
.308	7.82

Shell size	Arrangement number	Number of contacts	Size contacts	Service rating	Contact location	Superseded document
16	23	1	16	I	Z	MS33712-23
		22	20		Remainder	MS27729-23

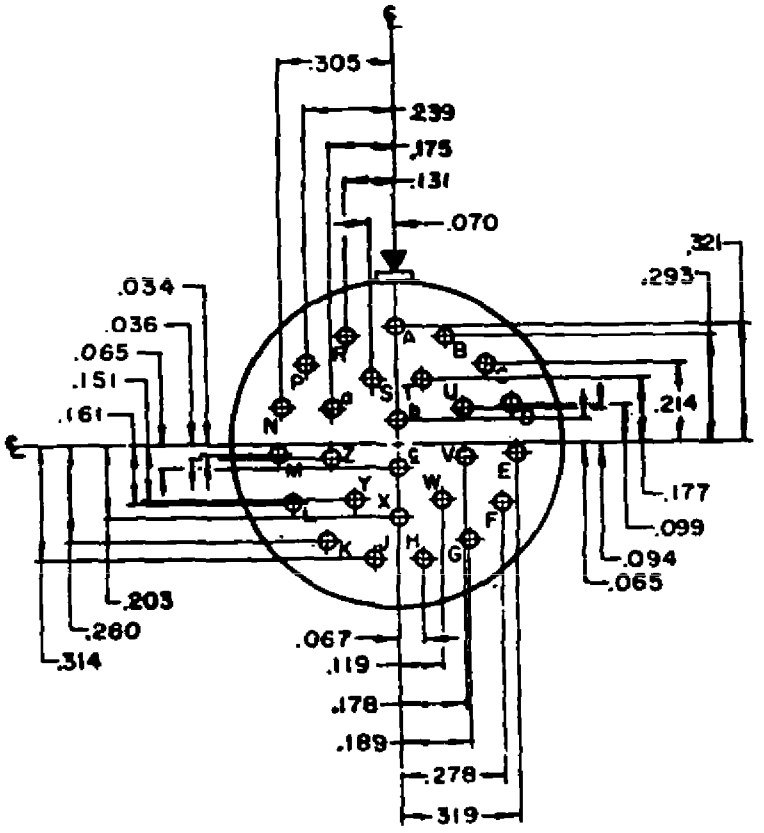

Alternate insert positions			
A degrees			
W	X	Y	Z
60	---	275	338

INCHES	MM
.034	.86
.036	.91
.065	1.65
.067	1.70
.070	1.79
.094	2.39
.099	2.51
.119	3.02
.131	3.33
.151	3.83
.161	4.34
.175	4.44
.177	4.96
.178	4.52
.179	4.55
.203	5.16
.214	5.44
.239	6.07
.260	6.60
.278	7.06
.293	7.44
.305	7.75
.314	7.98
.319	8.10
.321	8.15

Shell size	Arrangement number	Number of contacts	Size contacts	Service rating	Contact location	Superseded document
16	26	26	20	I	All	MS33712-26

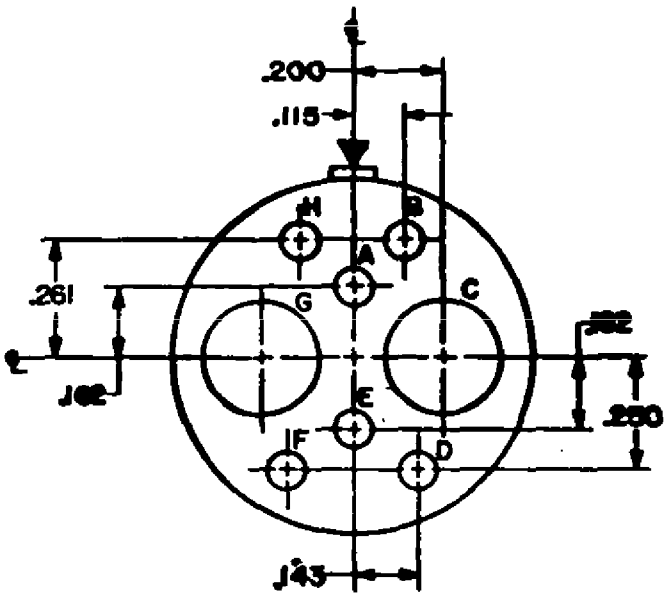

Alternate insert positions			
A degrees			
W	X	Y	Z
25	90	153	---

INCHES	MM
.115	2.92
.143	3.63
.162	4.11
.200	5.08
.250	6.35
.261	6.63

Shell size	Arrangement number	Number of contacts	Size contacts	Service rating	Contact location	Superseded document
16	95	6	20	I	A,B,D,E, F,H	MS33712-95
		2	8 Shielded Not applicable to series 2 (rear release) connectors		C,G	

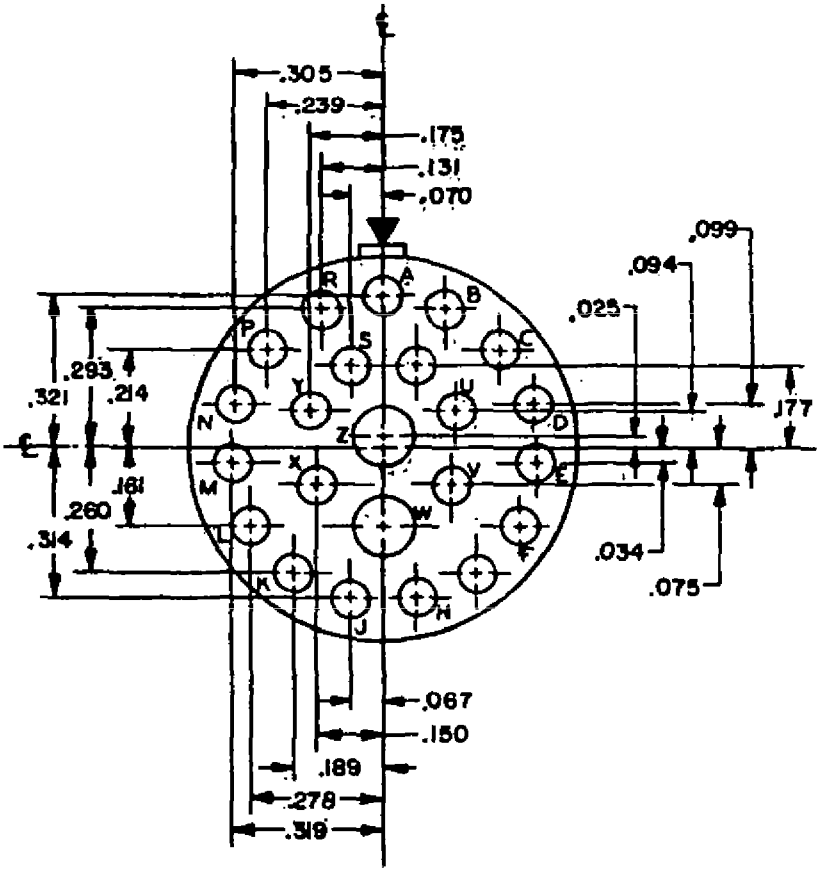

Alternate insert positions			
A degrees			
W	X	Y	Z
66	156	223	340

INCHES	MM
.025	.63
.034	.86
.067	1.70
.070	1.78
.075	1.90
.094	2.39
.099	2.51
.131	3.33
.150	3.81
.161	4.09
.175	4.44
.177	4.50
.189	4.80
.214	5.44
.239	6.07
.260	6.60
.278	7.06
.293	7.44
.305	7.75
.314	7.98
.319	8.10
.321	8.15

Shell size	Arrangement number	Number of contacts	Size contacts	Service rating	Contact location	Superseded document
16	99	2	16	I	W,Z	MS33712-99
		21	20		Remainder	

SECTION 60

SHELL SIZE 18

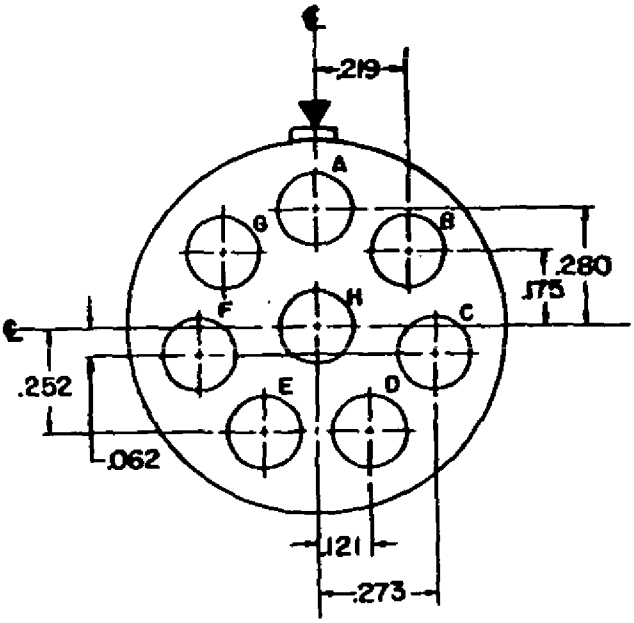

ALTERNATE INSERT POSITIONS			
A DEGREES			
W	X	Y	Z
180	—	—	—

INCHES	MM
.062	1.57
.121	3.07
.175	4.45
.219	5.56
.252	6.40
.273	6.93
.280	7.11

Shell size	Arrangement number	Number of contacts	Size contacts	Service rating	Contact location	Superseded document
18	8	8	12	I	All	MS33713-8 MS27730-8

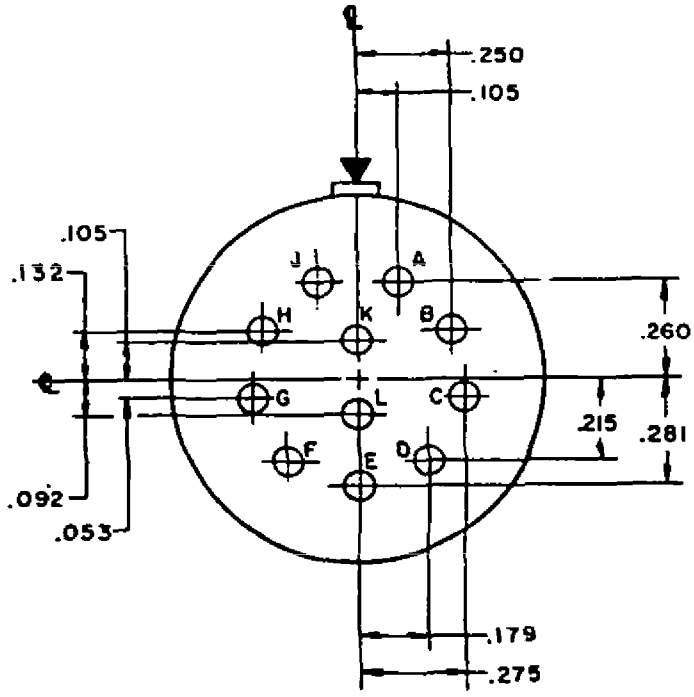

Alternate insert positions			
A degrees			
W	X	Y	Z
62	119	241	340

INCHES	MM	INCHES	MM
.053	1.35	.215	5.46
.092	2.34	.250	6.35
.105	2.67	.260	6.60
.132	3.35	.275	6.99
.179	4.55	.281	7.14

Shell size	Arrangement number	Number of contacts	Size contacts	Service rating	Contact location	Superseded document
18	11	11	16	II	All	MS33713-11

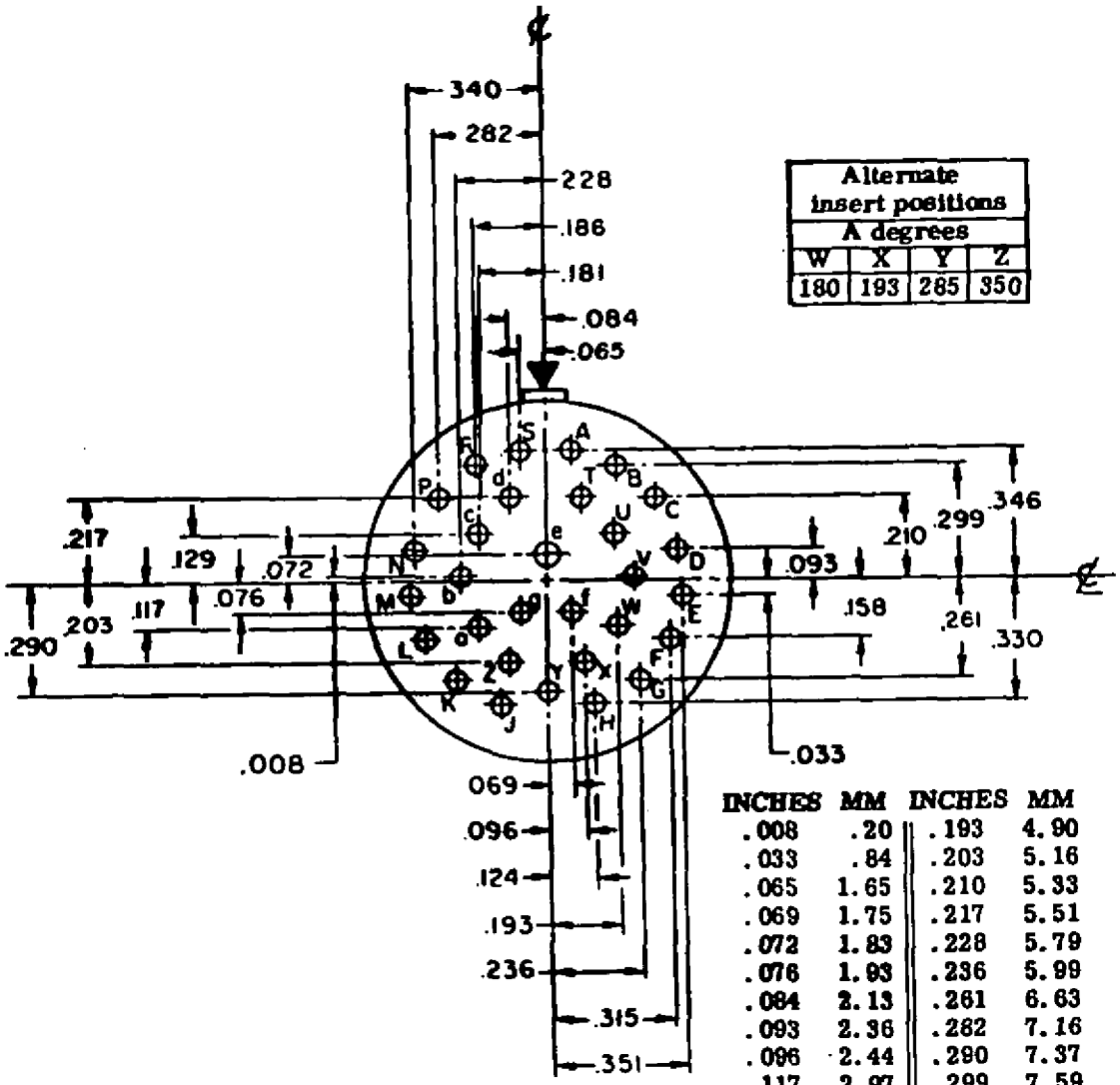

Alternate insert positions			
A degrees			
W	X	Y	Z
180	193	285	350

INCHES	MM	INCHES	MM
.008	.20	.193	4.90
.033	.84	.203	5.16
.065	1.65	.210	5.33
.069	1.75	.217	5.51
.072	1.83	.228	5.79
.076	1.93	.236	5.99
.084	2.13	.261	6.63
.093	2.36	.282	7.16
.096	2.44	.290	7.37
.117	2.97	.299	7.59
.124	3.15	.315	8.00
.129	3.28	.330	8.38
.158	4.01	.340	8.67
.181	4.60	.346	8.79
.186	4.72	.351	8.91

Shell size	Arrangement number	Number of contacts	Size contacts	Service rating	Contact location	Superseded document
18	30	1	16	I	•	MS33713-30 MS27730-30
		20	20		Remainder	

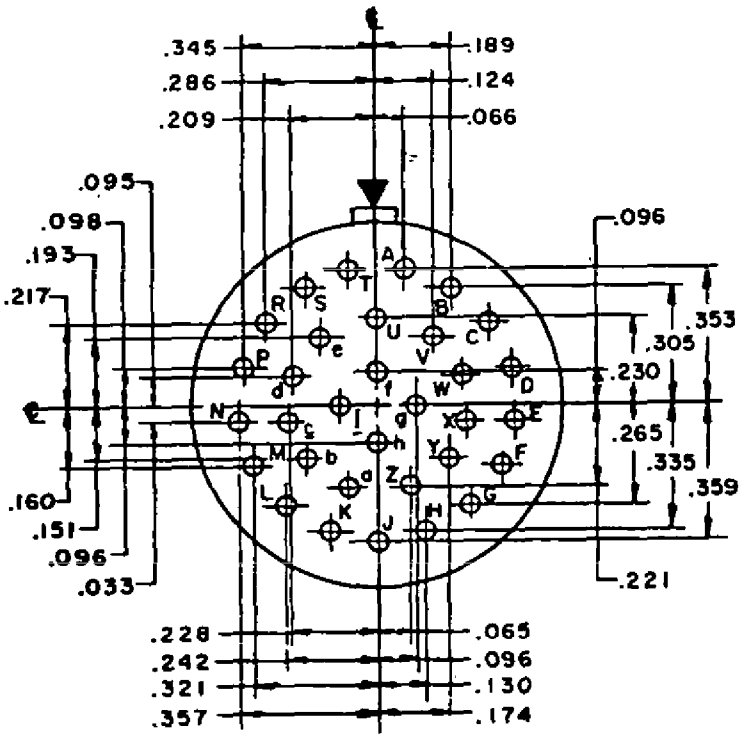

Alternate insert positions			
A degrees			
W	X	Y	Z
85	138	222	265

INCHES	MM	INCHES	MM
.033	.84	.217	5.51
.065	1.65	.221	5.61
.066	1.68	.228	5.79
.095	2.41	.230	5.84
.096	2.44	.242	6.15
.098	2.49	.265	6.73
.124	3.15	.286	7.26
.130	3.30	.305	7.75
.151	3.83	.321	8.15
.160	4.06	.335	8.51
.174	4.42	.345	8.76
.189	4.80	.353	8.97
.193	4.90	.357	9.07
.209	5.31	.359	9.12

Shell size	Arrangement number	Number of contacts	Size contacts	Service rating	Contact location	Superseded document
18	32	32	20	I	All	MS33713-32

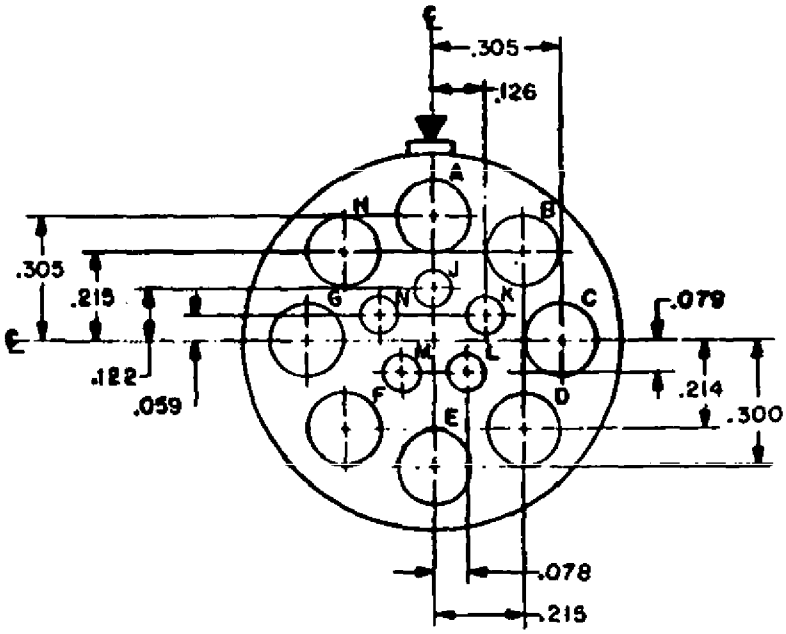

Alternate insert positions			
A degrees			
W	X	Y	Z
45	90	180	240

INCHES	MM
.059	1.50
.078	1.98
.079	2.01
.122	3.10
.126	3.20
.214	5.44
.215	5.46
.300	7.62
.305	7.75

Shell size	Arrangement number	Number of contacts	Size contacts	Service rating	Contact location	Superseded document
18	85	5	20	I	J,K,L, M,N	MS33713-85
		8	12		Remainder	

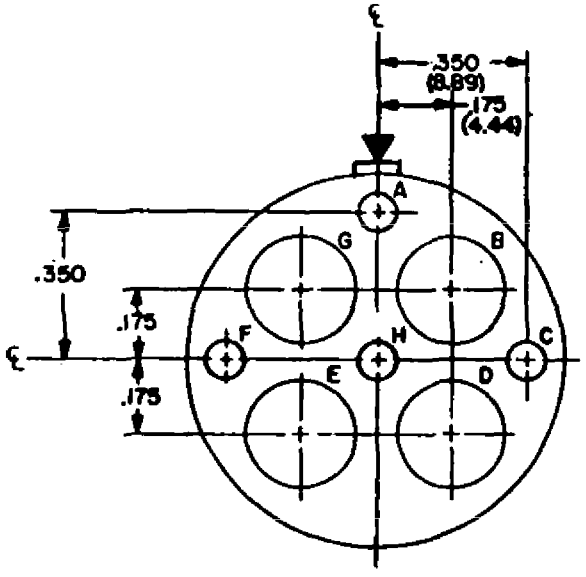

Alternate insert positions			
A degrees			
W	X	Y	Z
12	45	168	202

Shell size	Arrangement number	Number of contacts	Size contacts	Service rating	Contact location	Superseded document
18	88	4	20	I	A,C,F,H	MS33713-88
		4	8 Shielded Not applicable to series 2 (rear release) connectors		B,D,E,G	

SECTION 70

SHELL SIZE 20

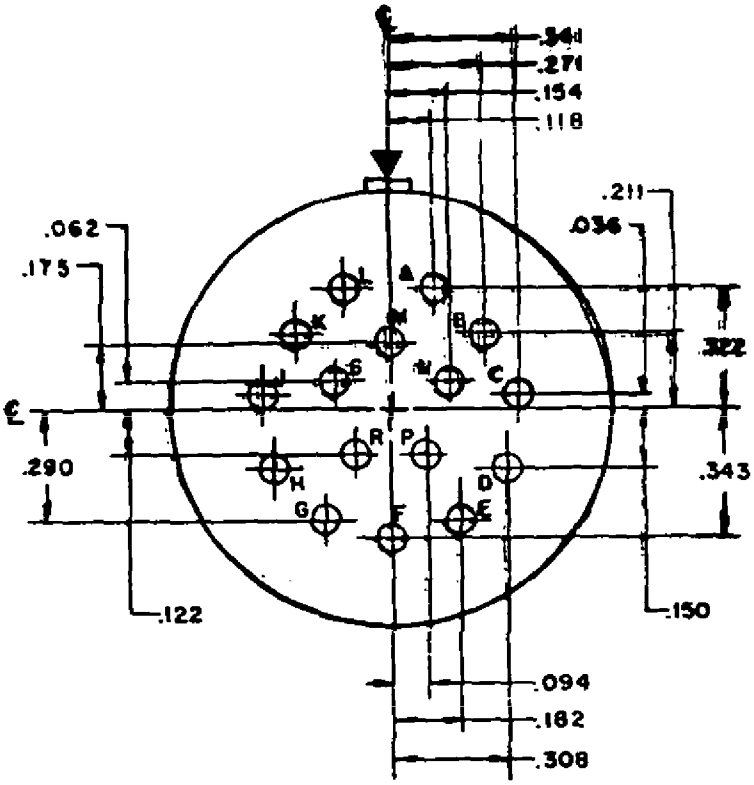

Alternate insert positions			
A degrees			
W	X	Y	Z
238	318	333	347

INCHES	MM
.036	.91
.062	1.37
.094	2.39
.118	3.00
.122	3.10
.150	3.81
.154	3.91
.175	4.44
.182	4.62
.211	5.36
.271	6.88
.290	7.37
.308	7.82
.322	8.18
.341	8.66
.343	8.71

Shell size	Arrangement number	Number of contacts	Size contacts	Service rating	Contact location	Superseded document
20	16	16	16	II	All	MS33714-16

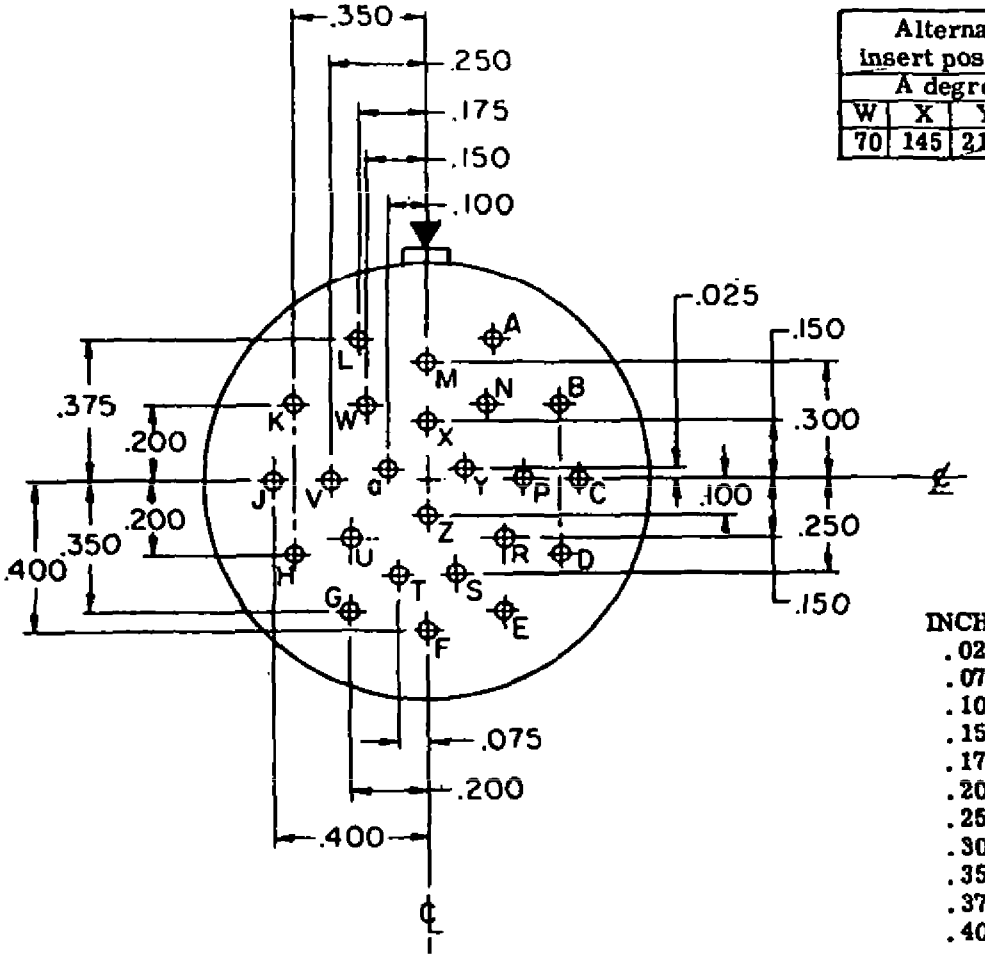

Alternate insert positions			
A degrees			
W	X	Y	Z
70	145	215	290

INCHES	MM
.025	.63
.075	1.90
.100	2.54
.150	3.81
.175	4.44
.200	5.08
.250	6.35
.300	7.62
.350	8.89
.375	9.52
.400	10.16

Shell size	Arrangement number	Number of contacts	Size contacts	Service rating	Contact location	Superseded document
20	24	24	20	I	All	MS33714-24 MS27731-24

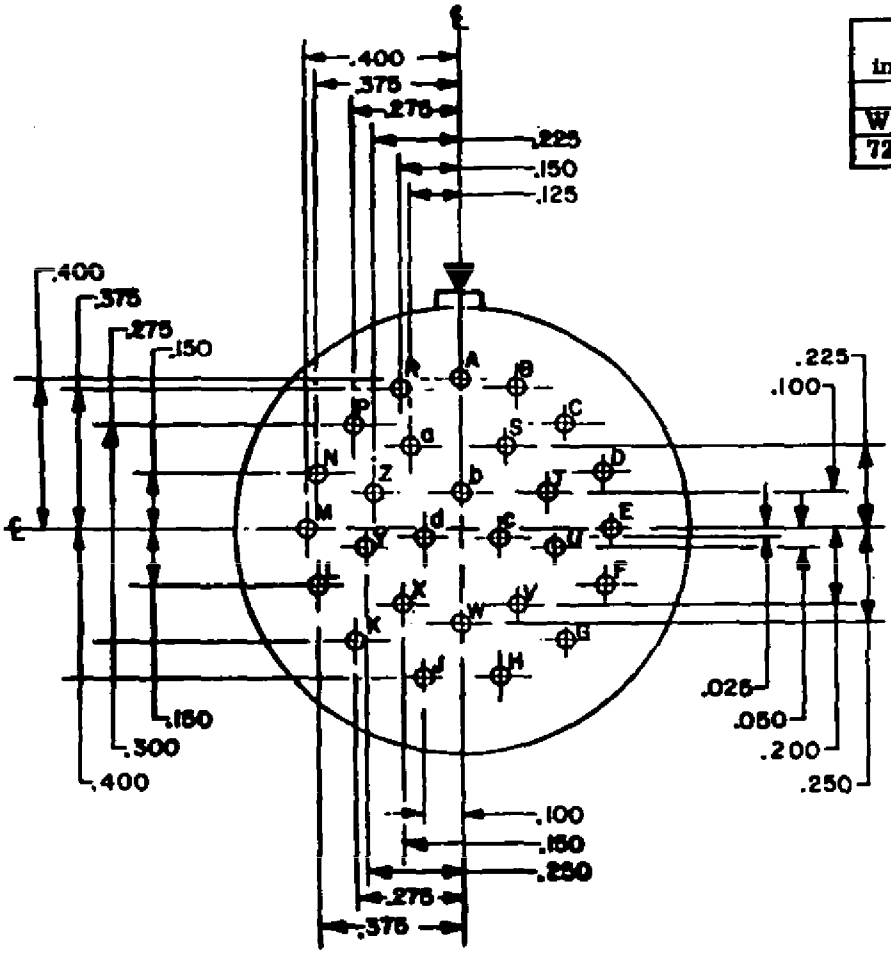

Alternate insert positions			
A degrees			
W	X	Y	Z
72	144	216	288

INCHES	MM
.025	.63
.050	1.27
.100	2.54
.125	3.18
.150	3.81
.200	5.08
.225	5.71
.250	6.35
.275	6.99
.300	7.62
.375	9.53
.400	10.16

Shell size	Arrangement number	Number of contacts	Size contacts	Service rating	Contact location	Superseded document
20	27	27	20	I	All	MS33714-27 MS27731-27

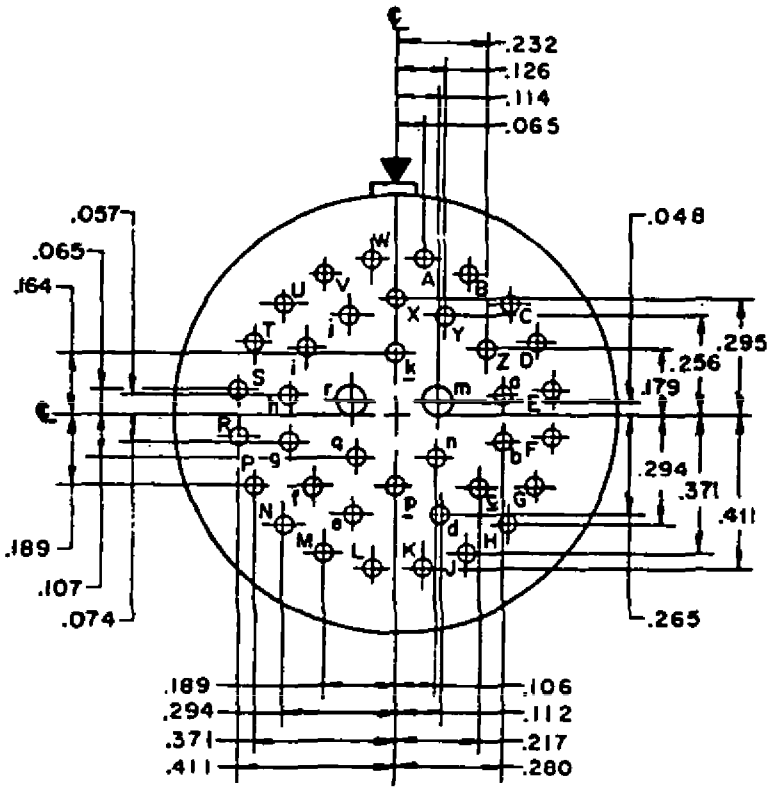

Alternate insert positions			
A degrees			
W	X	Y	Z
63	144	252	333

INCHES	MM
.048	1.22
.057	1.45
.065	1.65
.074	1.88
.106	2.69
.107	2.72
.112	2.84
.114	2.90
.126	3.20
.164	4.17
.179	4.55
.189	4.80
.217	5.51
.232	5.89
.256	6.50
.265	6.73
.280	7.11
.294	7.47
.295	7.49
.371	9.42
.411	10.44

Shell size	Arrangement number	Number of contacts	Size contacts	Service rating	Contact location	Superseded document
20	39	2	16	I	m,r	MS33714-39 MS27731-39
		37	20		Remainder	

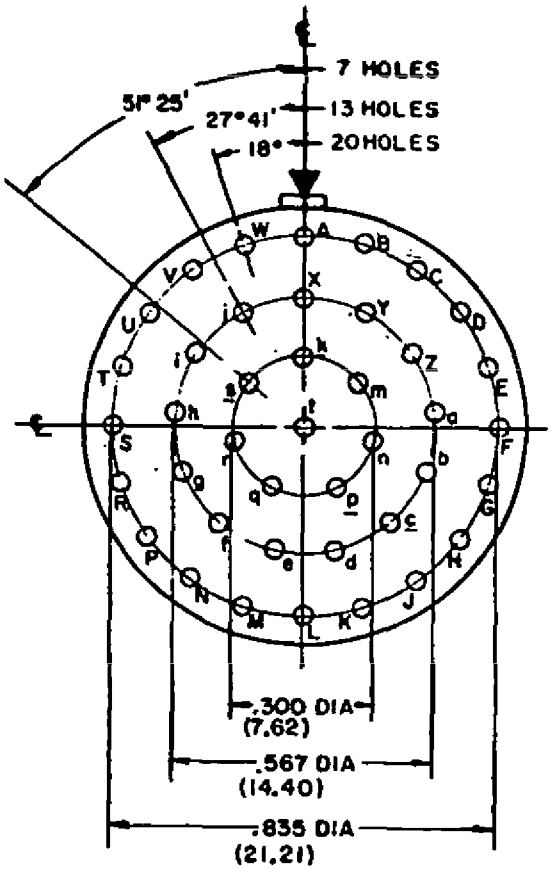

Alternate insert positions			
A degrees			
W	X	Y	Z
45	126	225	---

Angles ±0° 30'

Shell size	Arrangement number	Number of contacts	Size contacts	Service rating	Contact location	Superseded document
20	41	41	20	I	All	MS33714-41

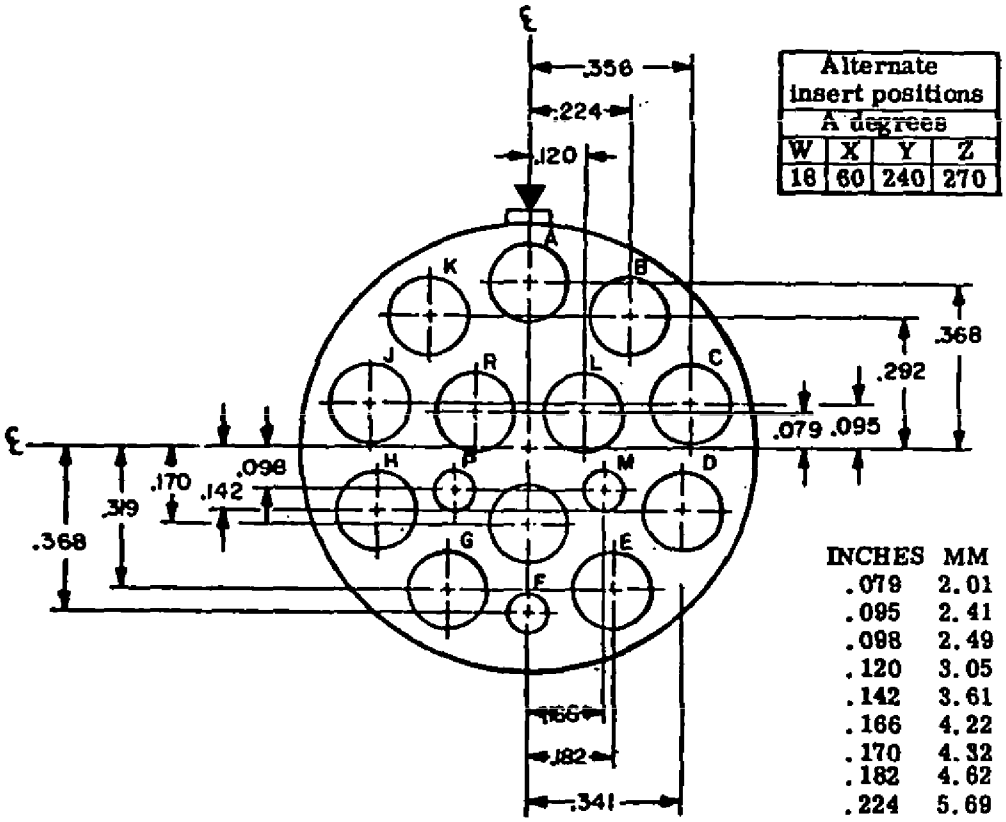

Alternate insert positions			
A degrees			
W	X	Y	Z
18	60	240	270

INCHES	MM
.079	2.01
.095	2.41
.098	2.49
.120	3.05
.142	3.61
.166	4.22
.170	4.32
.182	4.62
.224	5.69
.292	7.42
.319	8.10
.341	8.66
.356	9.04
.368	9.35

Shell size	Arrangement number	Number of contacts	Size contacts	Service rating	Contact location	Superseded document
20	90	3	20	I	F,M,P	MS33714-90
		12	12		Remainder	

SECTION 80

SHELL SIZE 22

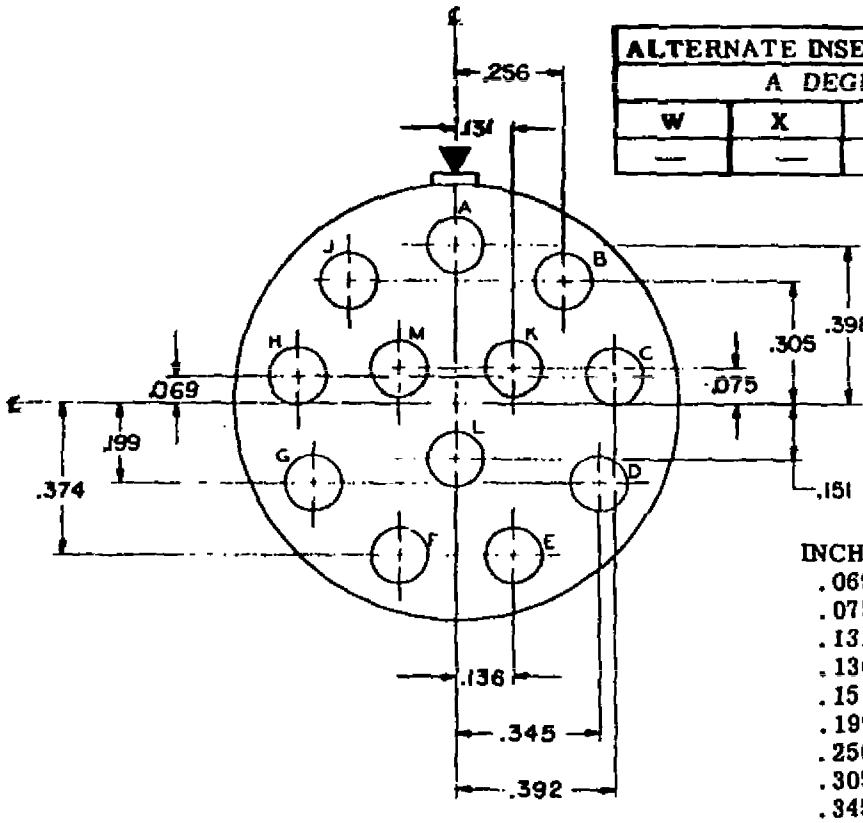

ALTERNATE INSERT POSITIONS			
A DEGREES			
W	X	Y	Z
—	—	—	—

INCHES	MM
.069	1.73
.075	1.90
.131	3.33
.136	3.45
.151	3.83
.199	5.06
.256	6.50
.305	7.75
.345	8.76
.374	9.50
.392	9.97
.398	10.11

Shell size	Arrangement number	Number of contacts	Size contacts	Service rating	Contact location	Superseded document
22	12	12	12	I	All	MS33715-12

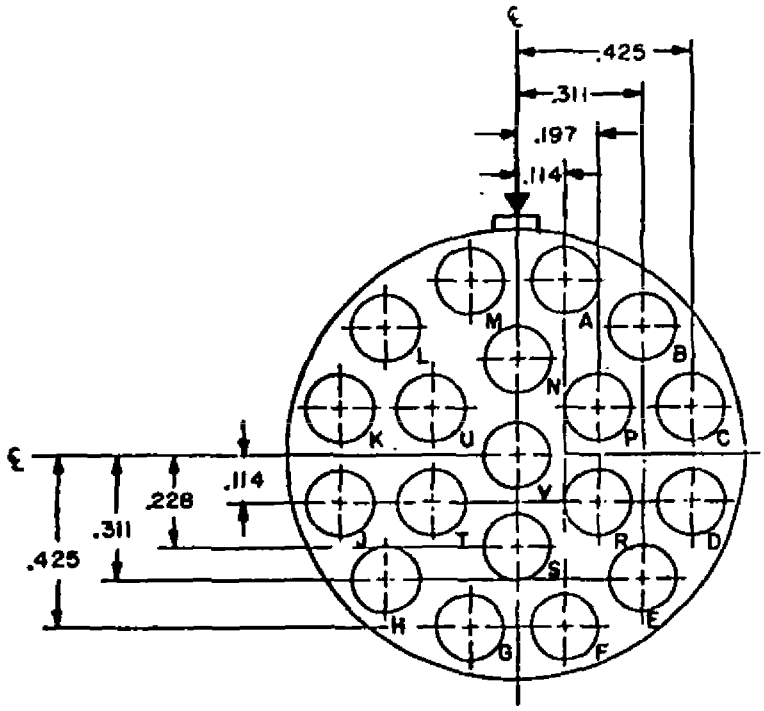

Alternate insert positions			
A degrees			
W	X	Y	Z
15	90	225	308

INCHES	MM
.114	2.90
.197	5.00
.228	5.79
.311	7.90
.425	10.80

Shell size	Arrangement number	Number of contacts	Size contacts	Service rating	Contact location	Superseded document
22	19	19	12	I	All	MS33715-19

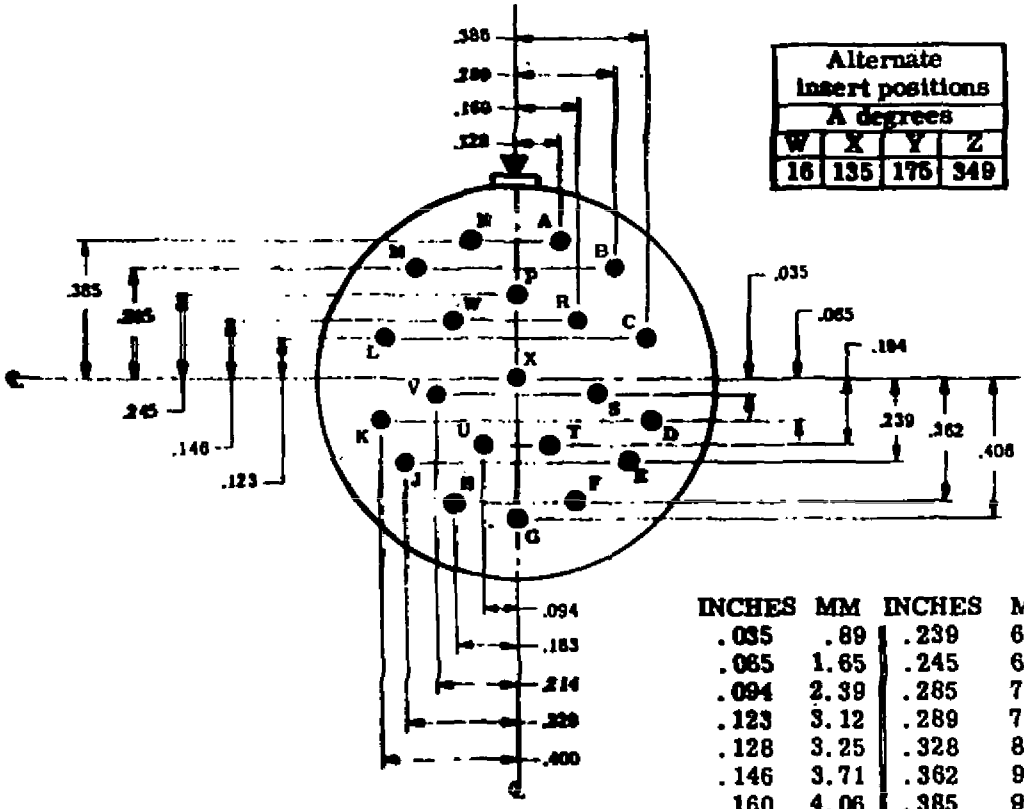

Alternate insert positions			
A degrees			
W	X	Y	Z
16	135	175	349

INCHES	MM	INCHES	MM
.035	.89	.239	6.07
.065	1.65	.245	6.22
.094	2.39	.285	7.24
.123	3.12	.289	7.34
.128	3.25	.328	8.33
.146	3.71	.362	9.19
.160	4.06	.385	9.78
.183	4.65	.386	9.80
.194	4.93	.400	10.16
.214	5.44	.406	10.31

Shell size	Arrangement number	Number of contacts	Size contacts	Service rating	Contact location	Superseded document
22	21	21	16	II	A11	MS33715-21

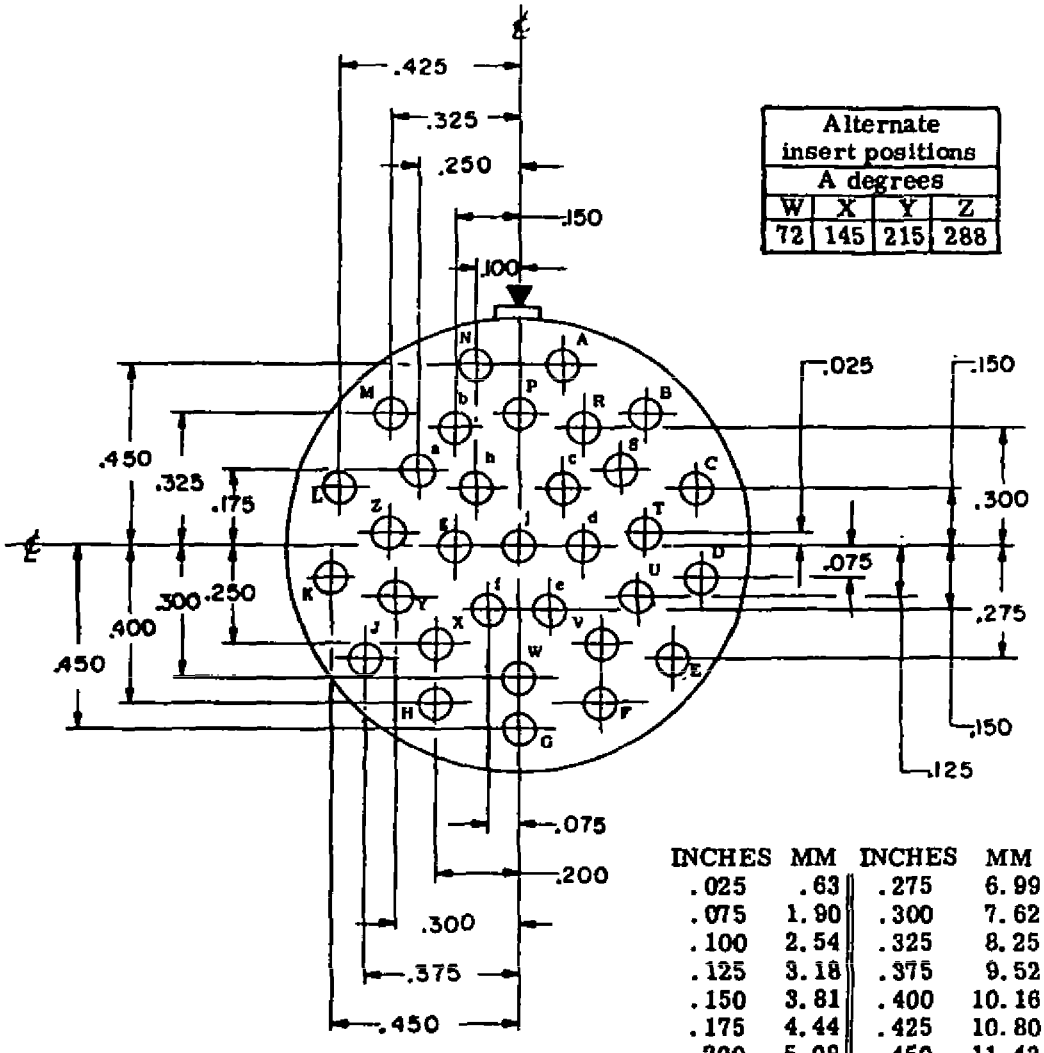

Alternate insert positions			
A degrees			
W	X	Y	Z
72	145	215	288

INCHES	MM	INCHES	MM
.025	.63	.275	6.99
.075	1.90	.300	7.62
.100	2.54	.325	8.25
.125	3.18	.375	9.52
.150	3.81	.400	10.16
.175	4.44	.425	10.80
.200	5.08	.450	11.43
.250	6.35		

Shell size	Arrangement number	Number of contacts	Size contacts	Service rating	Contact location	Superseded document
22	32	32	20	1	All	MS33715-32 MS27732-32 MS33715-18

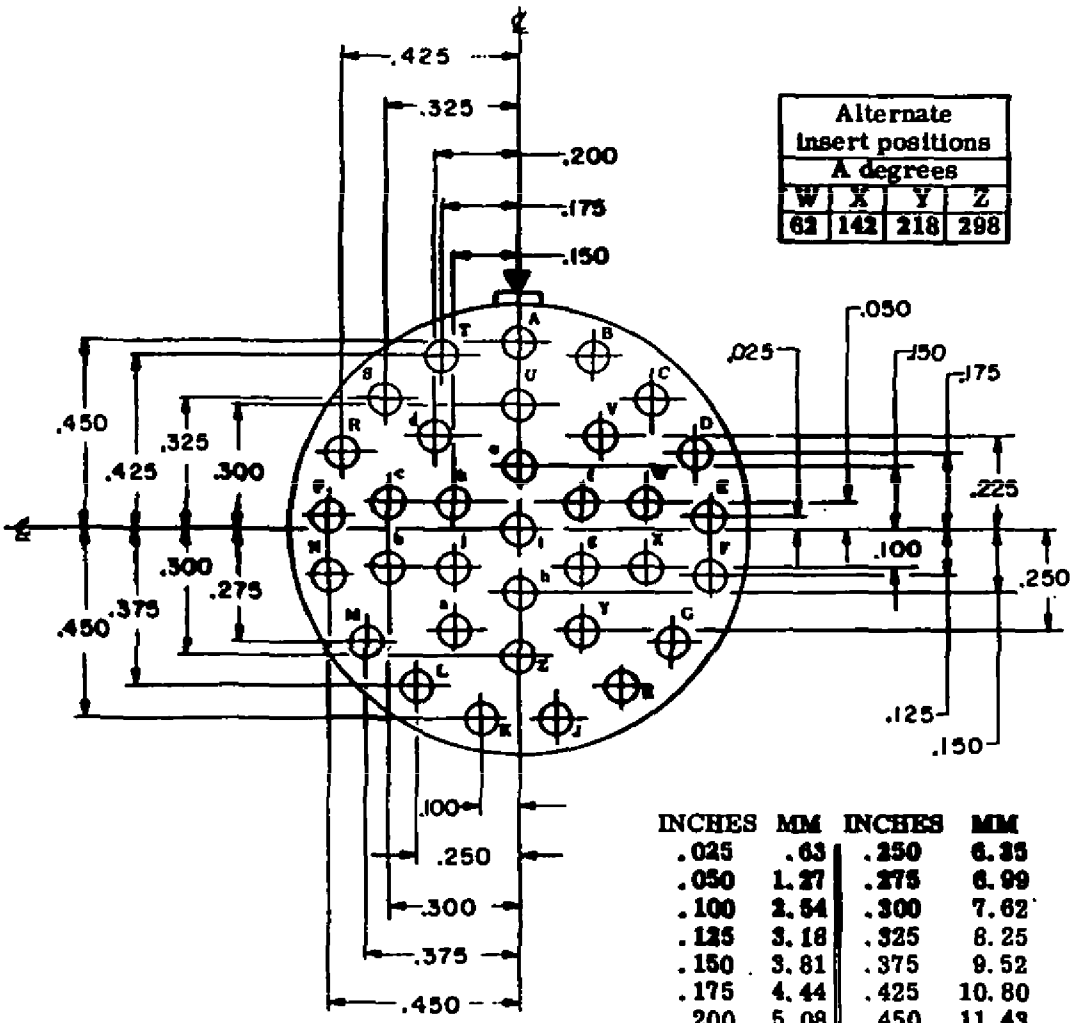

Alternate insert positions			
A degrees			
W	X	Y	Z
62	142	218	298

INCHES	MM	INCHES	MM
.025	.63	.250	6.35
.050	1.27	.275	6.99
.100	2.54	.300	7.62
.125	3.18	.325	8.25
.150	3.81	.375	9.52
.175	4.44	.425	10.80
.200	5.08	.450	11.43
.225	5.71		

Shell size	Arrangement number	Number of contacts	Size contacts	Service rating	Contact location	Superseded document
22	34	34	20	I	All	MS3371S-34 MS27732-34

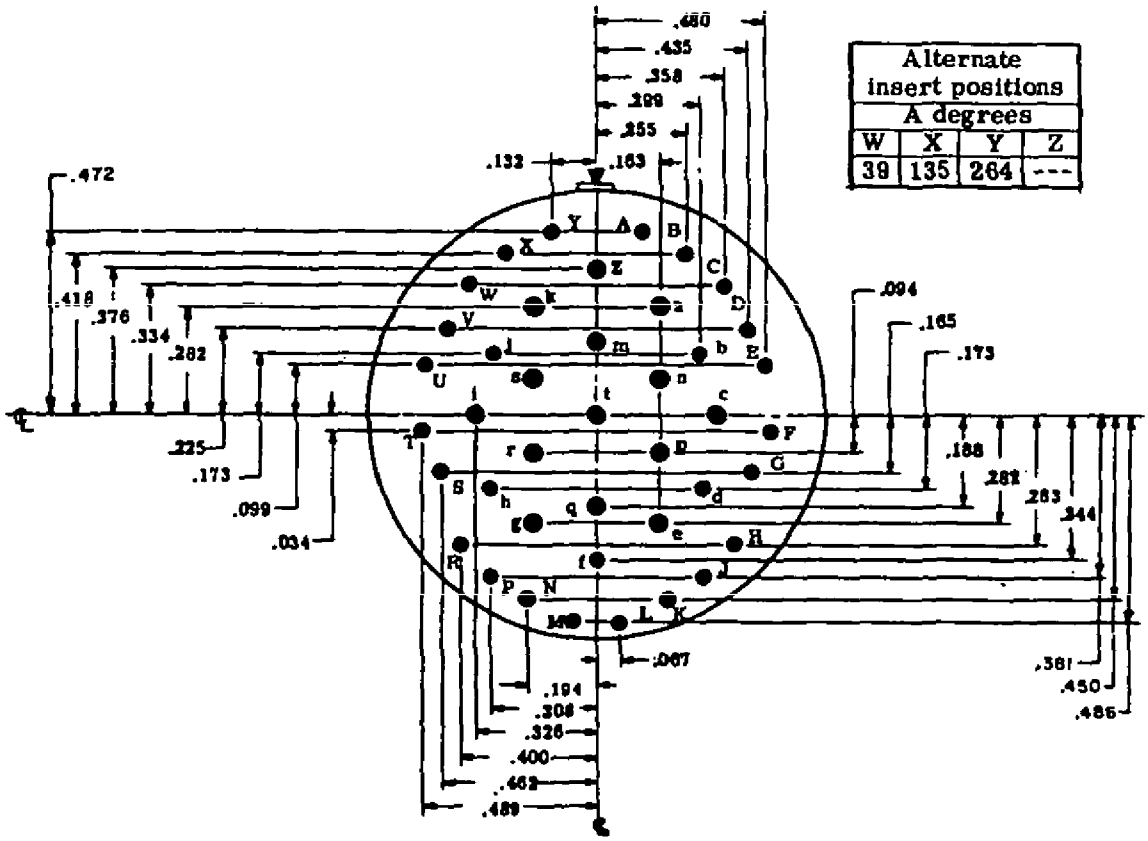

Alternate insert positions			
A degrees			
W	X	Y	Z
39	135	264	---

INCHES	MM	INCHES	MM	INCHES	MM
.034	.86	.255	6.48	.400	10.16
.067	1.70	.282	7.16	.418	10.62
.094	2.39	.283	7.19	.435	11.04
.099	2.51	.299	7.59	.450	11.43
.132	3.35	.308	7.82	.462	11.73
.163	4.14	.326	8.28	.472	11.99
.165	4.19	.334	8.48	.480	12.19
.173	4.39	.344	8.74	.486	12.34
.188	4.77	.358	9.09	.489	12.92
.194	4.93	.376	9.55		
.225	5.71	.381	9.68		

Shell size	Arrangement number	Number of contacts	Size contacts	Service rating	Contact location	Superseded document
22	41	14	16	I	Z,a,c,e,g,i,k,m,n,p,q,r,s,t	MS33715-41
		27	20		Remainder	

Alternate insert positions			
A degrees			
W	X	Y	Z
30	142	226	314

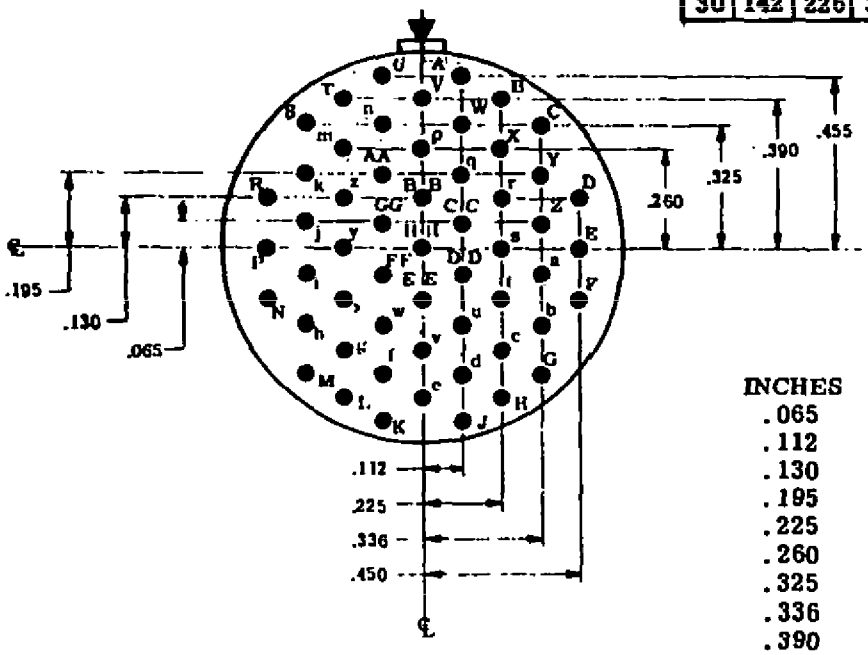

INCHES	MM
.065	1.65
.112	2.84
.130	3.30
.195	4.95
.225	5.71
.260	6.60
.325	8.25
.336	8.53
.390	9.91
.450	11.43
.455	11.56

Shell size	Arrangement number	Number of contacts	Size contacts	Service rating	Contact location	Superseded document
22	55	55	20	I	All	MS33715-55

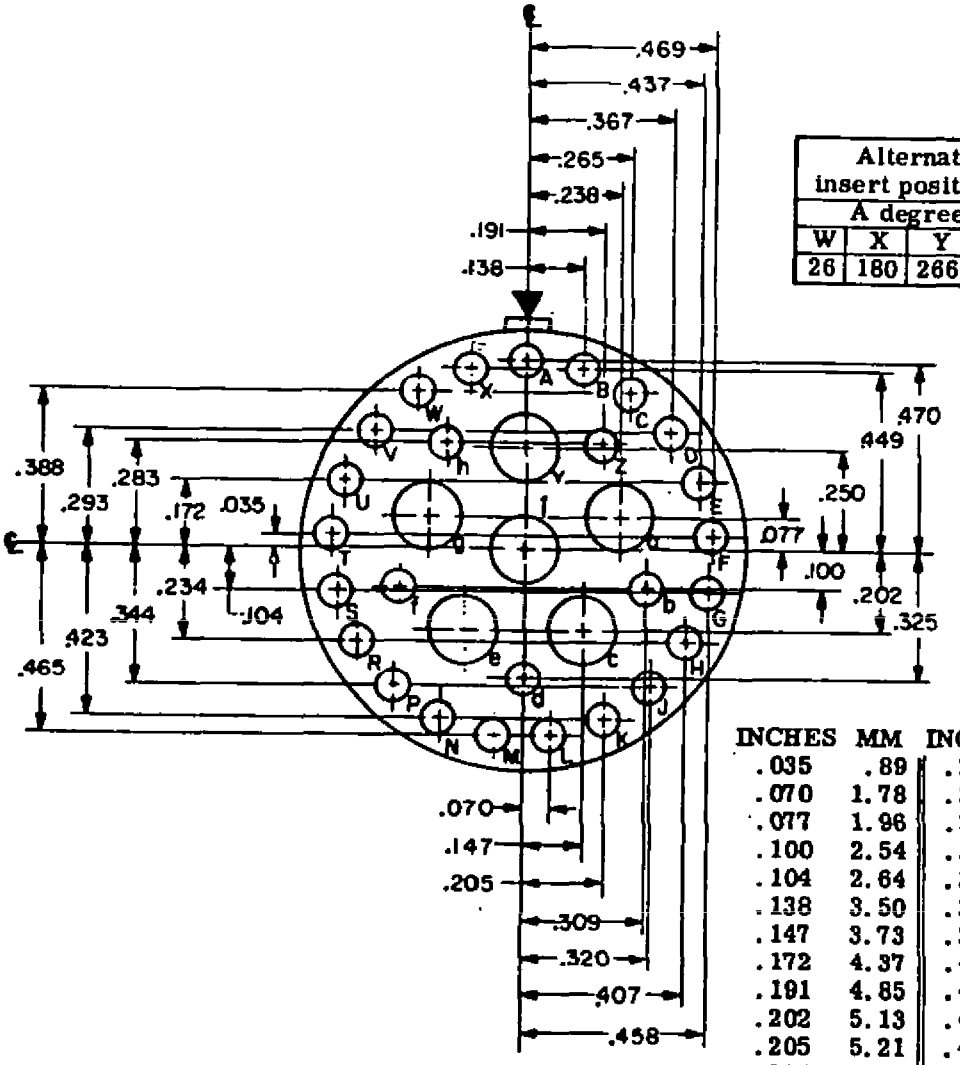

Alternate insert positions			
A degrees			
W	X	Y	Z
26	180	266	---

INCHES	MM	INCHES	MM
.035	.89	.293	7.44
.070	1.78	.309	7.85
.077	1.96	.320	8.13
.100	2.54	.325	8.25
.104	2.64	.344	8.74
.138	3.50	.367	9.32
.147	3.73	.388	9.86
.172	4.37	.407	10.34
.191	4.85	.423	10.74
.202	5.13	.437	11.10
.205	5.21	.449	11.40
.234	5.94	.458	11.63
.238	6.04	.465	11.81
.250	6.35	.469	11.91
.265	6.73	.470	11.94
.283	7.19		

Shell size	Arrangement number	Number of contacts	Size contacts	Service rating	Contact location	Superseded document
22	95	6	12	I	Y,a,c,e,g,i	MS33715-95
		26	20		Remainder	

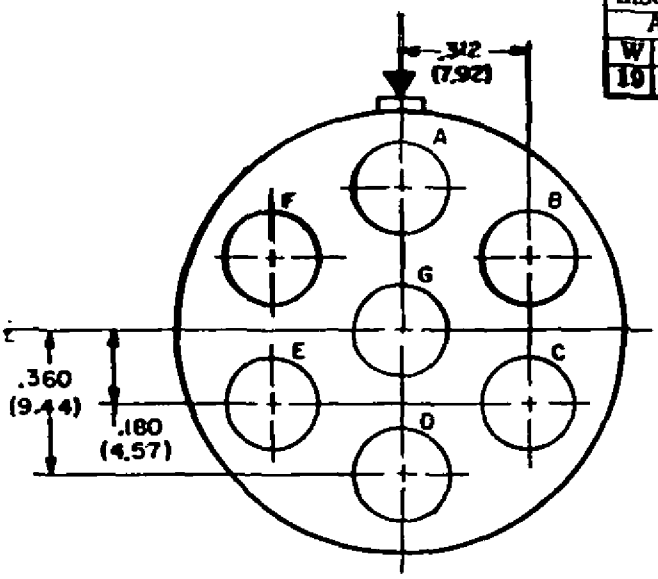

Alternate insert positions			
A degrees			
W	X	Y	Z
19	41	---	---

Shell size	Arrangement number	Number of contacts	Size contacts	Service rating	Contact location	Superseded document
22	96	7	*8 Shielded* Not applicable to series 2 (rear release connectors	I	A11	MS3371S-96

SECTION 90

SHELL SIZE 24

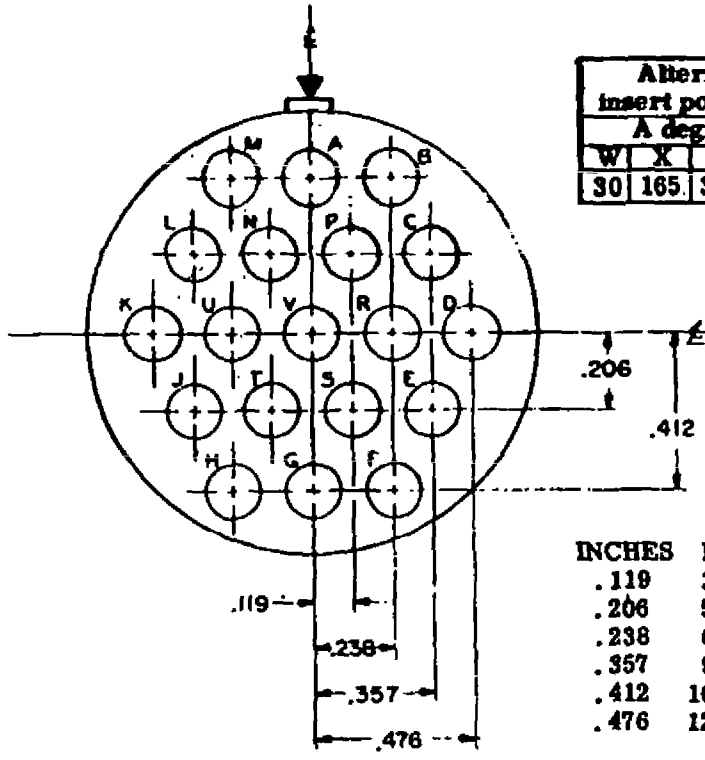

Alternate insert positions			
A degrees			
W	X	Y	Z
30	165	315	---

INCHES	MM
.119	3.02
.206	5.23
.238	6.04
.357	9.07
.412	10.46
.476	12.09

Shell size	Arrangement number	Number of contacts	Size contacts	Service rating	Contact location	Superseded document
24	19	19	12	II	All	MS33716-19 MS27733-19

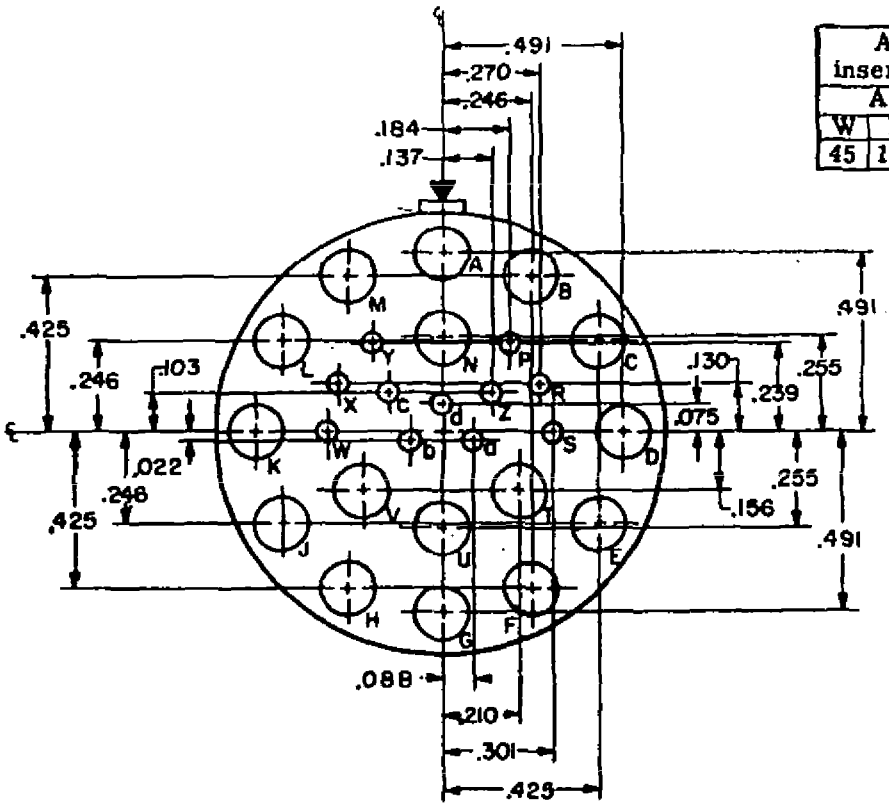

Alternate insert positions			
A degrees			
W	X	Y	Z
45	110	140	225

INCHES	MM
.022	.56
.075	1.90
.088	2.23
.103	2.62
.130	3.30
.137	3.48
.156	3.97
.184	4.67
.210	5.33
.239	6.07
.246	6.25
.255	6.48
.270	6.86
.301	7.64
.425	10.80
.491	12.47

Shell size	Arrangement number	Number of contacts	Size contacts	Service rating	Contact location	Superseded document
24	27	11	20	I	P,R,S,W,X, Y,Z,a,b,c, d	MS33716-27
		16	12		Remainder	

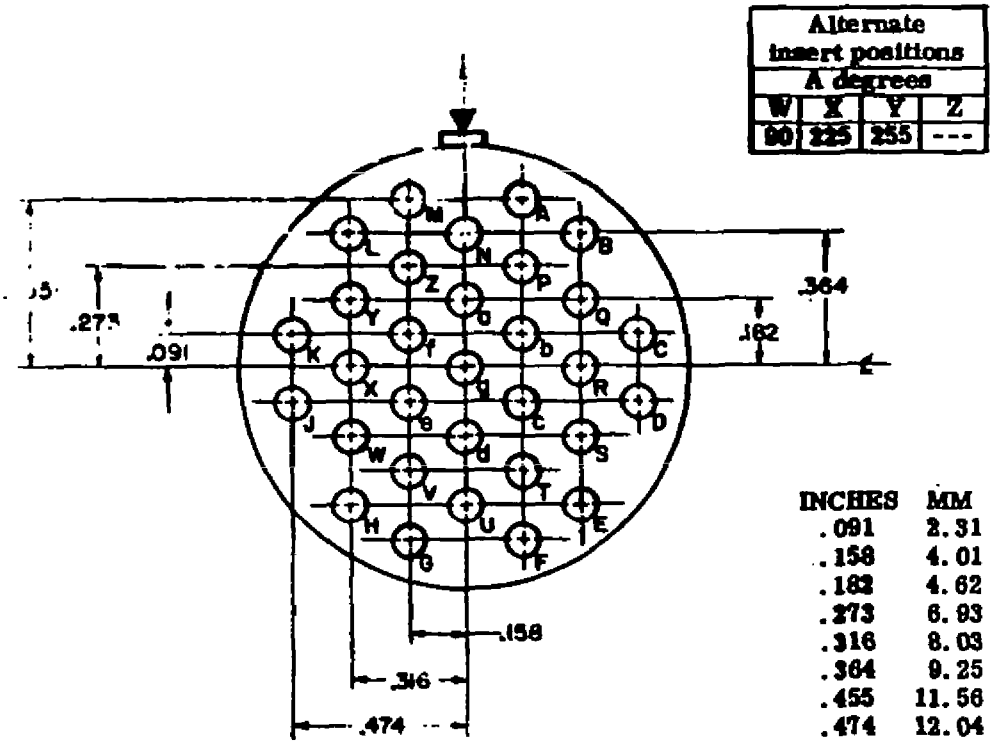

Alternate insert positions			
A degrees			
W	X	Y	Z
90	225	255	---

INCHES	MM
.091	2.31
.158	4.01
.182	4.62
.273	6.93
.316	8.03
.364	9.25
.455	11.56
.474	12.04

Shell size	Arrangement number	Number of contacts	Size contacts	Service rating	Contact location	Superseded document
24	31	31	16	I	All	MS33716-31 MS27737-31

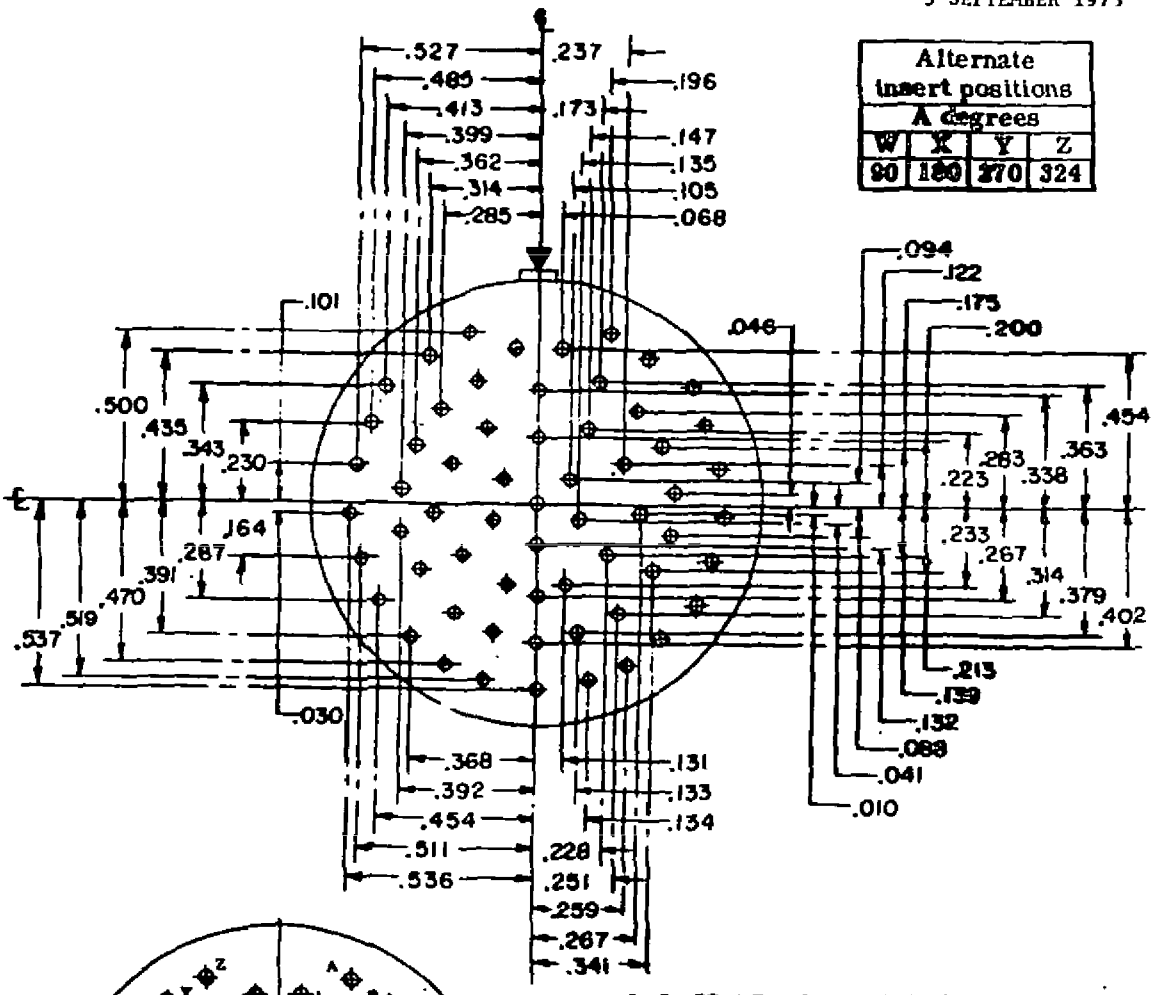

Alternate insert positions			
A degrees			
W	X	Y	Z
90	180	270	324

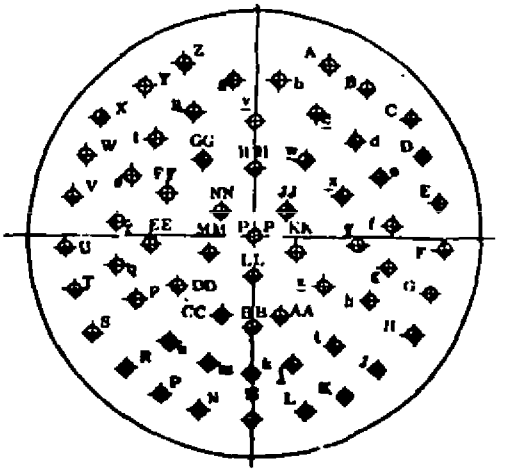

INCHES	MM	INCHES	MM	INCHES	MM
.010	.25	.175	4.44	.362	9.19
.030	.76	.196	4.98	.363	9.22
.041	1.04	.200	5.08	.368	9.35
.046	1.17	.213	5.41	.379	9.63
.068	1.73	.223	5.66	.391	9.93
.088	2.23	.228	5.79	.392	9.97
.094	2.39	.230	5.84	.399	10.13
.101	2.57	.233	5.92	.402	10.21
.105	2.67	.237	6.02	.413	10.49
.122	3.10	.251	6.37	.435	11.05
.131	3.33	.259	6.58	.454	11.53
.132	3.35	.267	6.78	.470	11.94
.133	3.38	.283	7.19	.485	12.32
.134	3.40	.285	7.24	.500	12.70
.135	3.43	.287	7.29	.511	12.98
.139	3.53	.314	7.98	.519	13.18
.147	3.73	.338	8.58	.527	13.39
.164	4.17	.341	8.66	.536	13.61
.173	4.39	.343	8.71	.537	13.64

Shell size	Arrangement number	Number of contacts	Size contacts	Service rating	Contact location	Superseded document
24	61	61	20	I	All	MS33716-61