NOTE: The cover page of this standard has been changed for administrative reasons. There are no changes to this document.

NOTICE OF CHANGE

INCH-POUND

MIL-STD-348A
NOTICE 3
30 JUNE 1998

DEPARTMENT OF DEFENSE

INTERFACE STANDARD

RADIO FREQUENCY CONNECTOR INTERFACES FOR

MIL-C-3643, MIL-C-3650, MIL-C-3655, MIL-C-25516,
MIL-C-26637, MIL-PRF-39012, MIL-PRF-49142,
MIL-PRF-55339, MIL-C-83517

TO ALL HOLDERS OF MIL-STD-348A:

1. THE FOLLOWING PAGES OF MIL-STD-348A ARE NEW OR HAVE BEEN REVISED AND SUPERSEDE THE PAGES LISTED:

NEW PAGE	DATE	SUPERSEDED PAGE	DATE
303.2	20 April 1988	303.2	Reprinted Without Change
304.1		304.1	20 April 1988
311.1		311.1	20 April 1988
311.2	20 April 1988	311.2	Reprinted Without Change
319.1		319.1	12 January 1990
319.2		319.2	12 January 1990
321.1		321.1	12 January 1990
321.2	12 January 1990	321.2	Reprinted Without Change
321.3		321.3	12 January 1990
322.1		322.1	12 January 1990
322.2		322.2	12 January 1990
326.1 through 326.5		New pages	

2. RETAIN THIS NOTICE AND INSERT BEFORE TABLE OF CONTENTS.

3. Holders of MIL-STD-348A will verify that page changes and additions indicated above have been entered. This notice page will be retained as check sheet. This issuance, together with appended pages, is a separate publication. Each notice is to be retained by stocking points until the standard is completely revised or canceled.

CONCLUDING MATERIAL

Custodians:
Army - CR
Navy - EC
Air Force - 85

Preparing activity:
DLA - CC

(Project 5935-4086)

Review activities:
Army - AT, AV, MI
Navy - AS, CG, MC, SH
Air Force - 10, 17, 99

AMSC N/A

FSC 5935

DISTRIBUTION STATEMENT A. Approved for public release; distribution is unlimited.

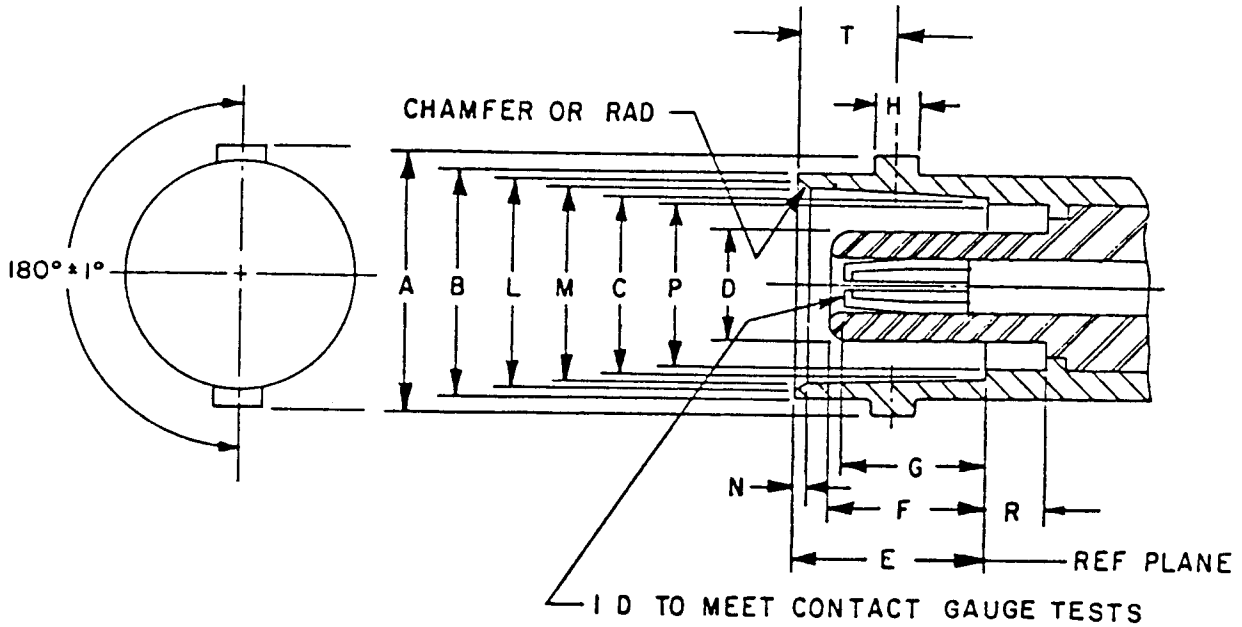

Dim Ltr	Dimensions in inches with metric equivalents (mm) in parentheses.	
	Minimum	Maximum
A	.432 (10.97)	.436 (11.07)
B	.378 (9.60)	.382 (9.70)
C	.319 (8.10)	.321 (8.15)
D		.186 (4.72)
E	.327 (8.31)	.335 (8.51)
F	.289 (7.34)	.311 (7.90)
G	.253 (6.43)	.280 (7.11)
H	.075 (1.91)	.081 (2.06)
J	.270 (6.86)	
K	.081 (2.06)	.091 (2.31)
L	.346 (8.79)	.356 (9.04)
M	.327 (8.31)	.333 (8.46)
N	.015 (0.38)	.030 (0.76)
P	.284 (7.21)	.290 (7.37)
R	.086 (2.18)	
T	.165 (4.19)	.169 (4.29)

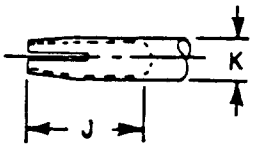

NOTE: This interface shall meet the gauge requirements as specified in MIL-C-39012/101.

FIGURE 303-2. Interface, series MHV, socket contact.

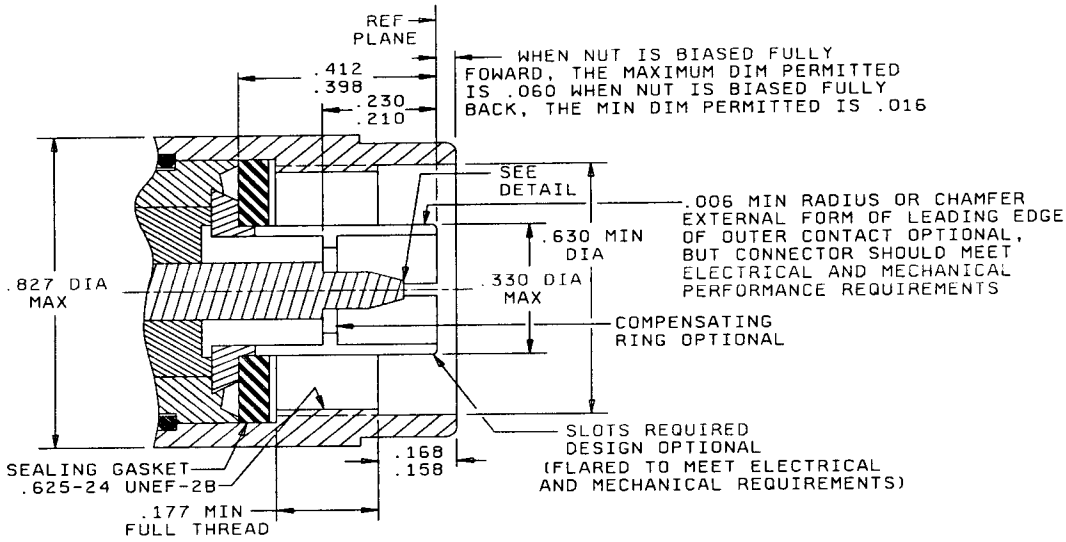

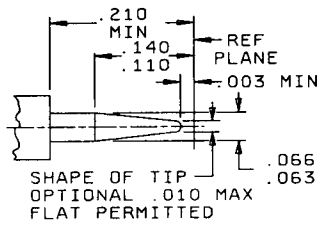

DETAIL

Inches	mm	Inches	mm
.003	0.08	.177	4.50
.010	0.25	.210	5.33
.016	0.41	.230	5.84
.060	1.52	.330	8.38
.063	1.60	.398	10.11
.066	1.68	.412	10.46
.110	2.79	.625	15.88
.140	3.56	.630	16.00
.158	4.01	.827	21.01
.168	4.27		

NOTE: This interface shall meet the gauge requirements as specified in MIL-PRF-39012/1.

FIGURE 304-1. Interface, series N, pin contact.

SUPERSEDES PAGE 304.1 OF MIL-STD-348A

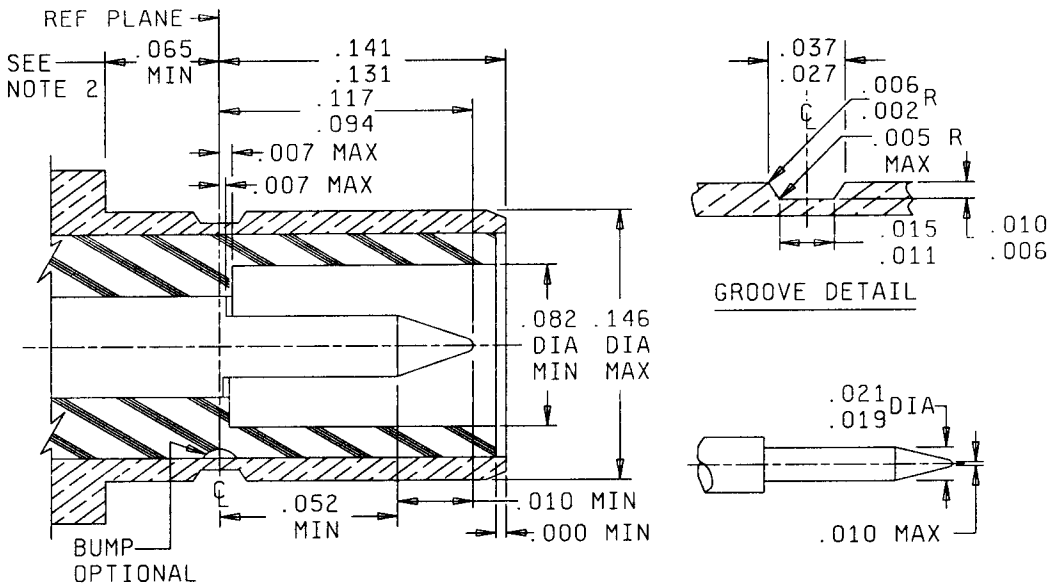

Inches	mm	Inches	mm
.000	0.00	.027	0.69
.002	0.05	.037	0.94
.005	0.13	.052	1.32
.006	0.15	.065	1.65
.007	0.18	.082	2.08
.010	0.25	.094	2.39
.011	0.28	.117	2.97
.015	0.38	.131	3.33
.019	0.48	.141	3.58
.021	0.53	.146	3.71

NOTES:
1. This interface shall meet the gauge requirements as specified in MIL-PRF-39012/68.
2. Clearance for mating connector coupling nut.

FIGURE 311-1. Interface, series SMB, pin contact.

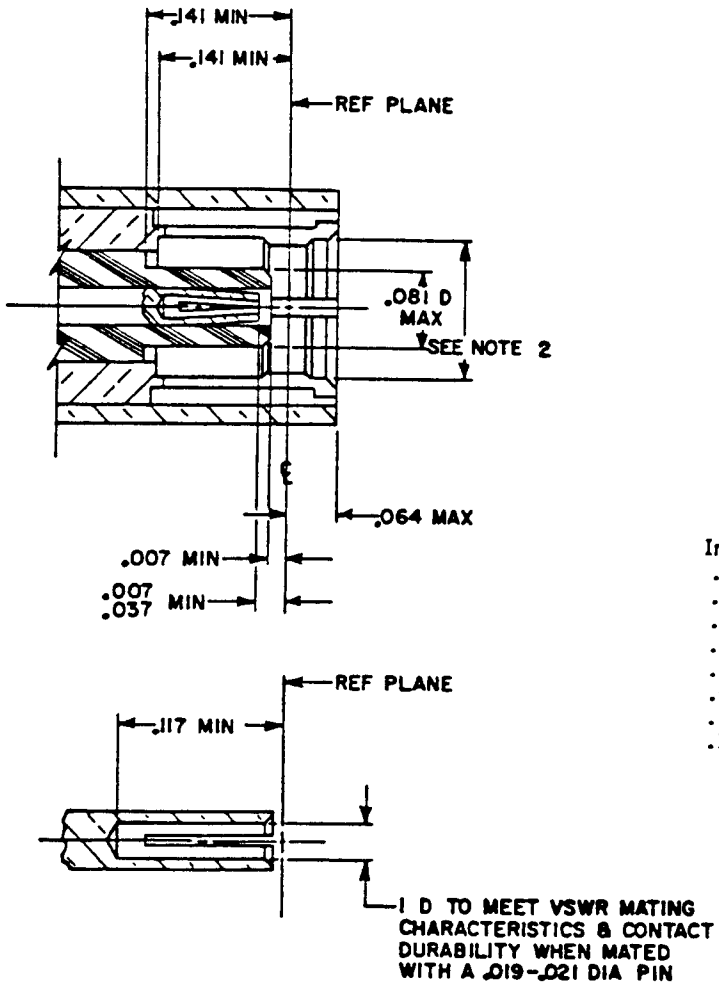

Inches	mm
.007	0.18
.019	0.48
.021	0.53
.037	0.94
.064	1.63
.081	2.06
.117	2.97
.141	3.58

NOTES:
1. Method of slotting of inner contact optional.
2. Must meet the longitudinal force requirements of force to engage and disengage when mated with its mating gauge.
3. This interface shall meet the gauge requirements as specified in MIL-C-39012/67.

FIGURE 311-2. Interface, series SMB, socket contact.

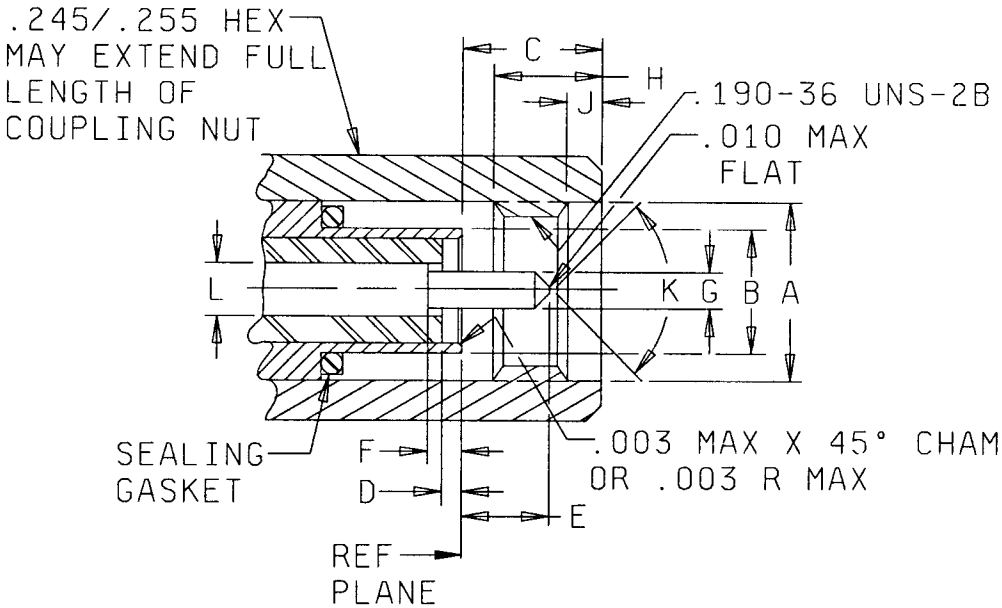

Ltr	Inches		Millimeters	
	Min	Max	Min	Max
A dia	.196	.202	4.98	5.13
B dia	.124	.1268	3.15	3.22
C	.100	.133	2.54	3.38
D	.000	.010	0.00	0.25
E	.050	.065	1.27	1.65
F	.000	.010	0.00	0.25
G dia	.0195	.0208	0.495	0.529
H	.130	---	3.30	---
J	.015	0.45	0.38	1.14
K	70°	95°	70°	95°
L dia	.0335	.0348	0.851	0.884

FIGURE 319-1. Interface, series SSMA, pin contact.

SUPERSEDES PAGE 319.1 OF NOTICE 1

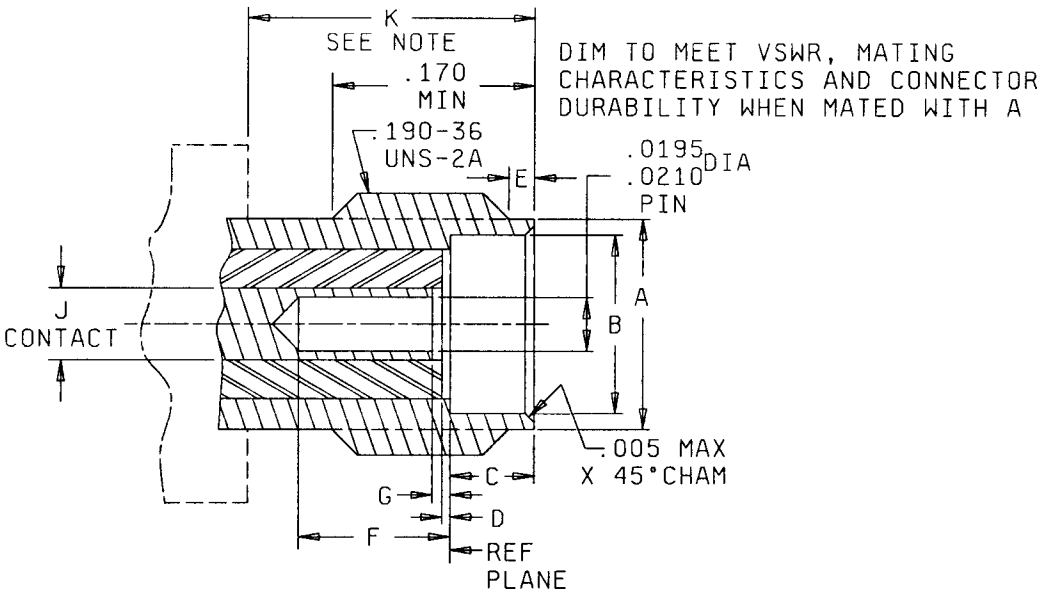

Inches	mm
.005	0.11
.0195	0.50
.0210	0.530
.170	4.30
.190	4.81

Ltr	Inches		Millimeters	
	Min	Max	Min	Max
A dia	.147	.150	3.89	4.06
B dia	.127	.130	3.23	3.30
C	.075	.077	1.90	1.96
D	.000	.010	0.00	0.25
E	.020	.040	0.51	1.02
F	.075	---	1.90	---
G	.000	.010	0.00	0.25
J dia	.0335	.0348	0.851	0.884
K	.230	---	5.84	---

NOTE: Clearance for coupling nut.

FIGURE 319-2. Interface, series SSMA, socket contact.

SUPERSEDES PAGE 319.2 OF NOTICE 1

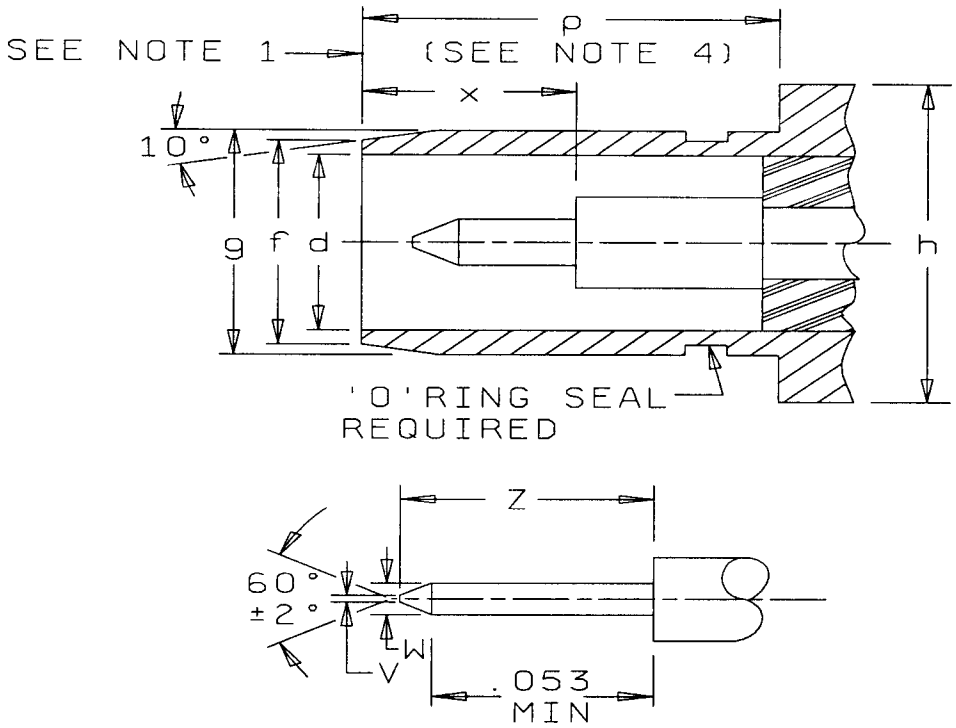

Inches	mm
.053	1.35

FIGURE 321-1. Interface, series BMA, pin contact.

SUPERSEDES PAGE 321.1 OF NOTICE 1

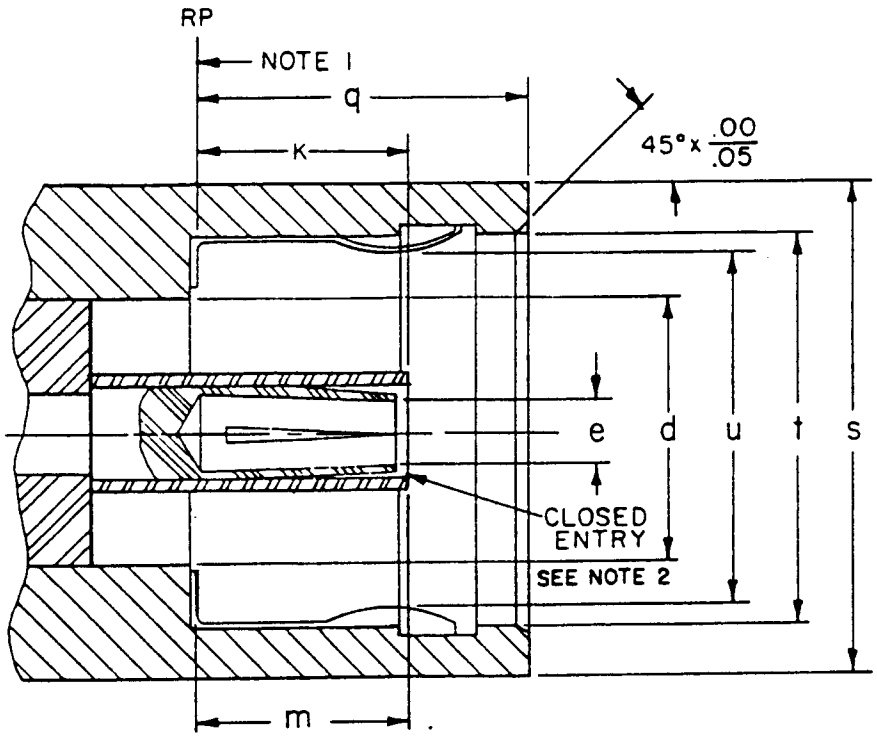

Inches	mm
.005	0.13
.010	0.25
.012	0.30
.0355	0.90
.0370	0.94
.115	2.92
.164	4.15
.184	4.68
.187	4.75
.222	5.64
.250	6.35
.278	7.05
.468	11.89

FIGURE 321-2. Interface, series BMA, socket contact.

NEW PAGE

Ref	Inches		Millimeters		Notes
	Min	Max	Min	Max	
d	0.161 nom		4.08 nom		
e	---	---	---	---	2
f	0.192 nom		4.88 nom		
g	.209	.211	5.30	5.35	
h	0.300 nom		7.62 nom		
k	0.120	0.127.	---	3.22	
m	0.115	---	2.92	---	
p	0.198	---	5.03	---	
q	---	0.198	---	4.95	3
s	0.290	---	7.37	---	
t	.225	---	5.71	---	
u	---	0.200	---	5.08	
v	---	0.015	---	0.38	
w	0.0354	0.0370	0.899	0.940	
x	0.128	---	3.25	---	
z	0.090 nom		2.29 nom		

NOTES:
1. Reference plane.
2. Bore diameter closed to meet electrical and mechanical requirements when mated with a 0.0355/0.0370 inch (0.902/0.940 mm) pin.
3. With spring finger bottomed.
4. Clearance for mating connector coupling nut.
5. Patent notice: See 6.2 for U.S. patent number 4,426,127.

FIGURE 321-3. Interface dimension table, series BMA.

SUPERSEDES PAGE 321.3 OF NOTICE 1

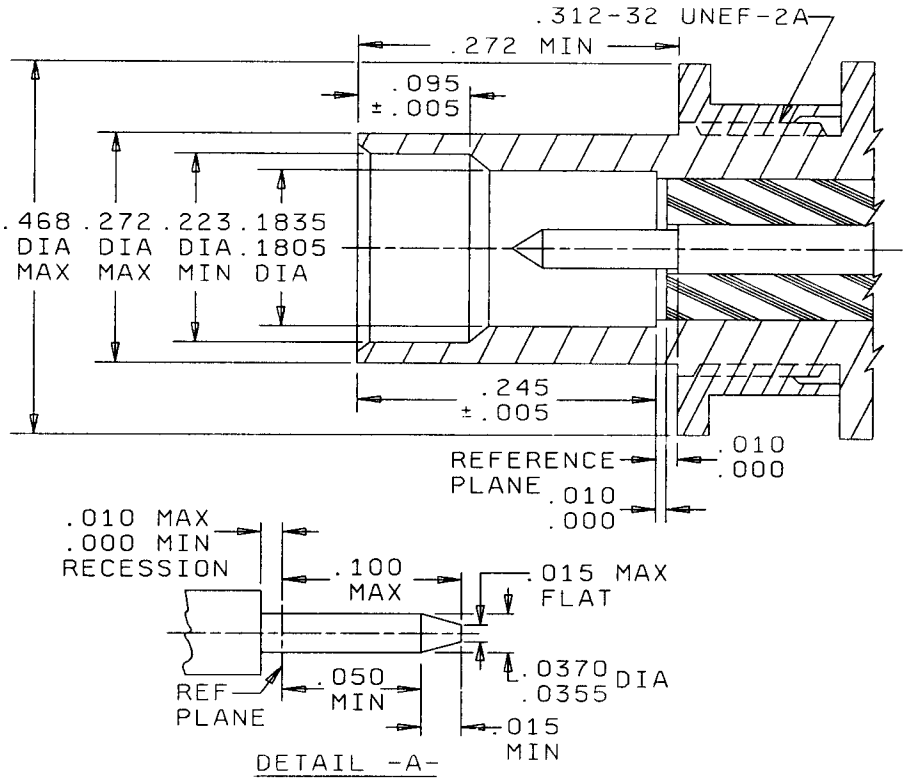

Inches	mm
.000	0.00
.005	0.13
.010	0.25
.015	0.38
.0355	0.902
.0370	0.940
.050	1.27
.095	2.40
.100	2.54
.1805	4.580
.1835	4.660
.223	5.66
.254	6.45
.272	6.91
.312	7.92
.468	11.89

NOTES:
1. Patent notice: See 6.2 for U.S patent number 4,358,174.
2. Unless otherwise specified, tolerance is ±.005 (0.13 mm).

FIGURE 322-1. Interface, series BMB, pin contact.

SUPERSEDES PAGE 322.1 OF NOTICE 1

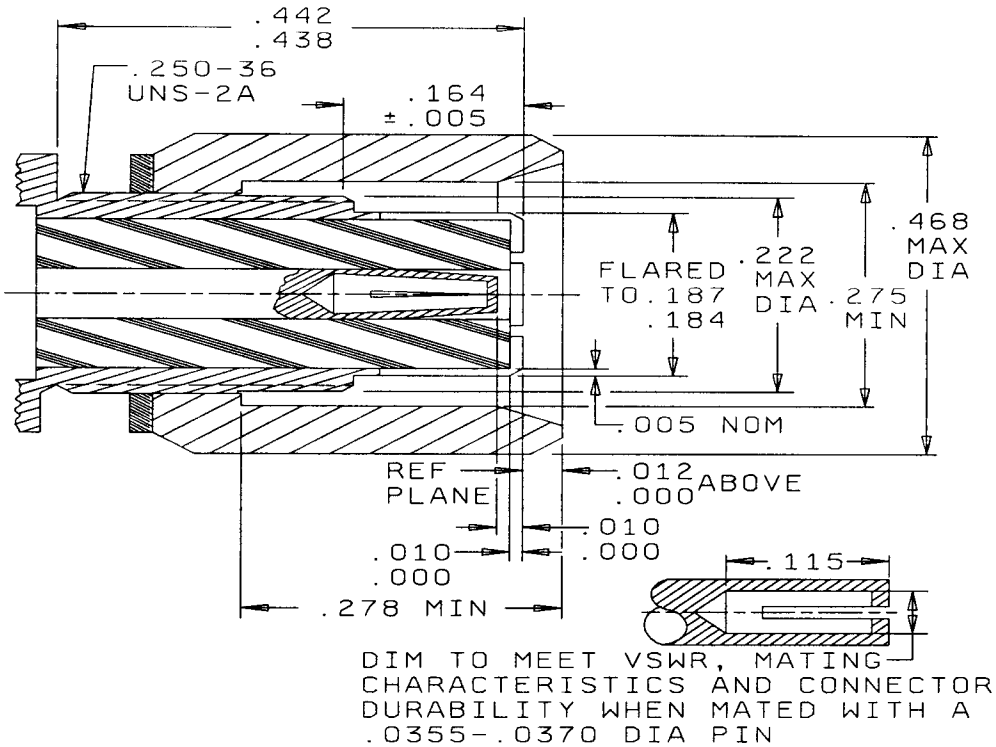

Inches	mm
000	0.00
.005	0.13
.010	0.25
.012	0.30
.0355	0.902
.0370	0.940
.115	2.92
.164	4.17
.184	4.67
.187	4.75
.222	5.64
.250	6.35
.275	6.99
.278	7.06
.438	11.13
.442	11.23

NOTES:
1. Patent notice: See 6.2 for U.S. patent number 4,358,174.
2. Unless otherwise specified, tolerance is ±.005 (0.13 mm).

FIGURE 322-2. Interface, series BMB, socket contact.

Supersedes page 322.2 of Notice 1

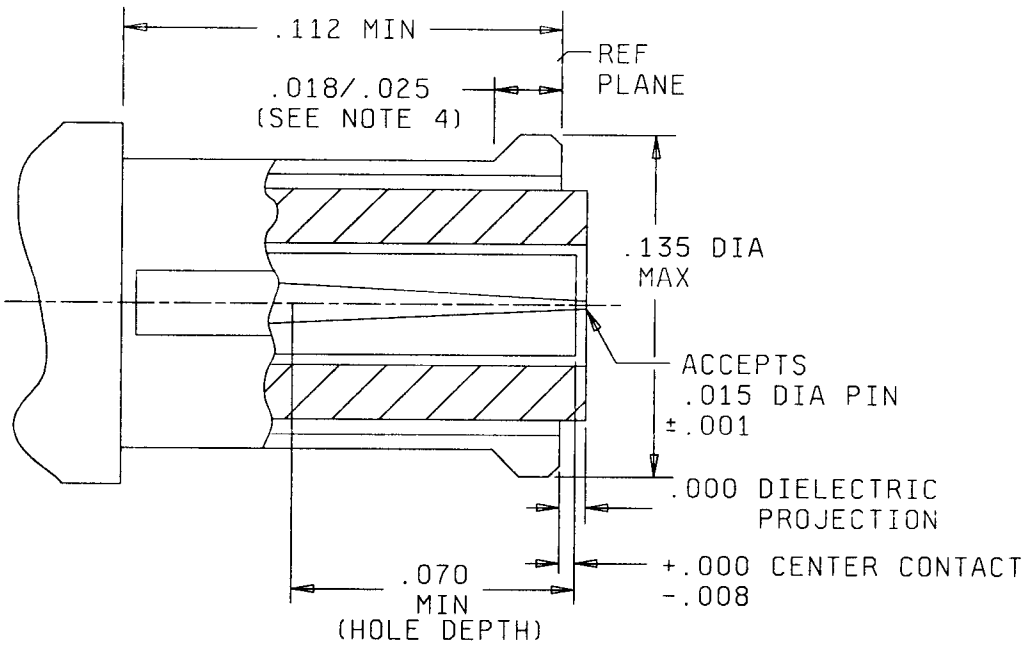

Inches	mm
.001	0.03
.008	0.20
.015	0.38
.018	0.46
.025	0.64
.070	1.78
.112	2.84
.135	3.43

NOTES:
1. Dimensions are in inches.
2. Metric equivalents are given for information only.
3. Interface shall meet the force to engage and disengage requirements.
4. Dimension for mating interface.

FIGURE 326-1. Interface, series SMP, socket contact.

NEW

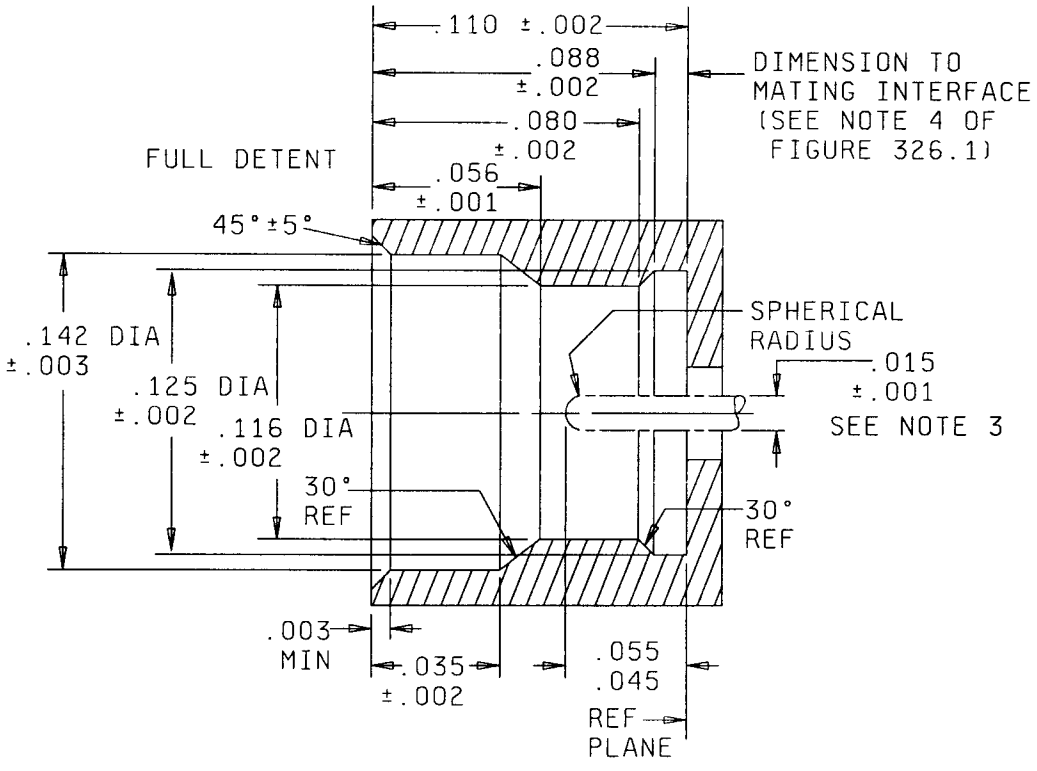

Inches	mm
.001	0.03
.002	0.05
.003	0.08
.005	0.13
.015	0.38
.035	0.89
.045	1.14
.055	1.40
.056	1.42
.080	2.03
.088	2.24
.110	2.79
.116	2.95
.125	3.18
.142	3.61

NOTES:
1. Dimensions are in inches.
2. Metric equivalents are given for information only.
3. Pin not supplied with shroud.

FIGURE 326-2. Interface, series SMP, pin contact, full detent.

NEW

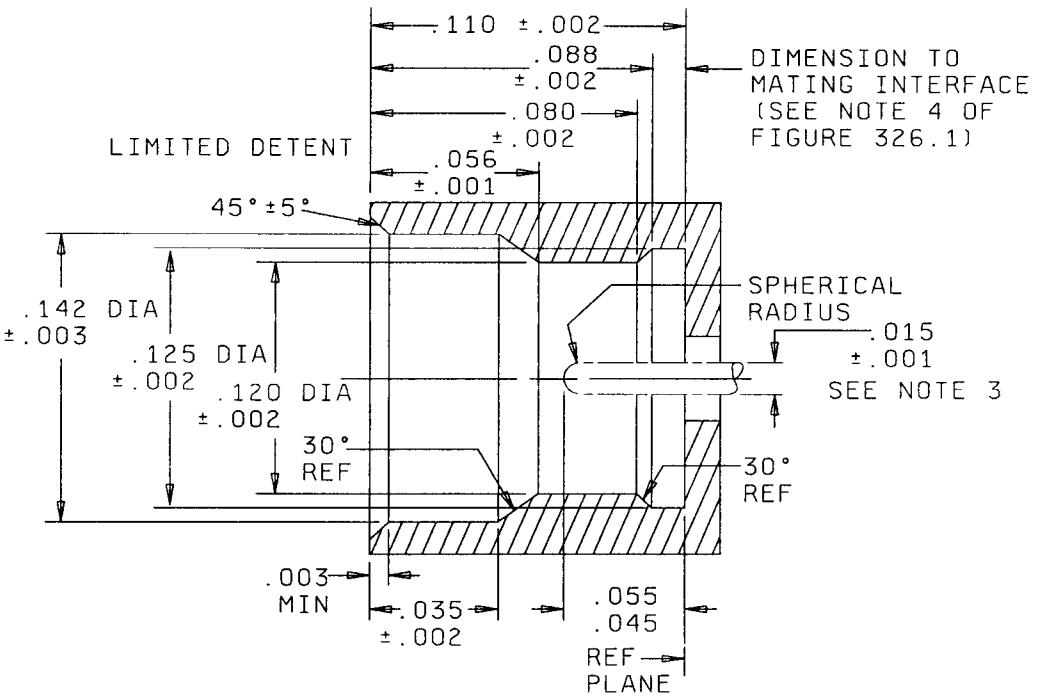

Inches	mm	Inches	mm
.001	0.03	.056	1.42
.002	0.05	.080	2.03
.003	0.08	.088	2.24
.015	.038	.110	2.79
.035	.089	.120	3.05
.045	1.14	.125	3.18
.055.	1.40	.142	3.61

NOTES:
1. Dimensions are in inches.
2. Metric equivalents are given for information only.
3. Pin not supplied with shroud.

FIGURE 326-3. Interface, series SMP, pin contact, limited detent.

NEW

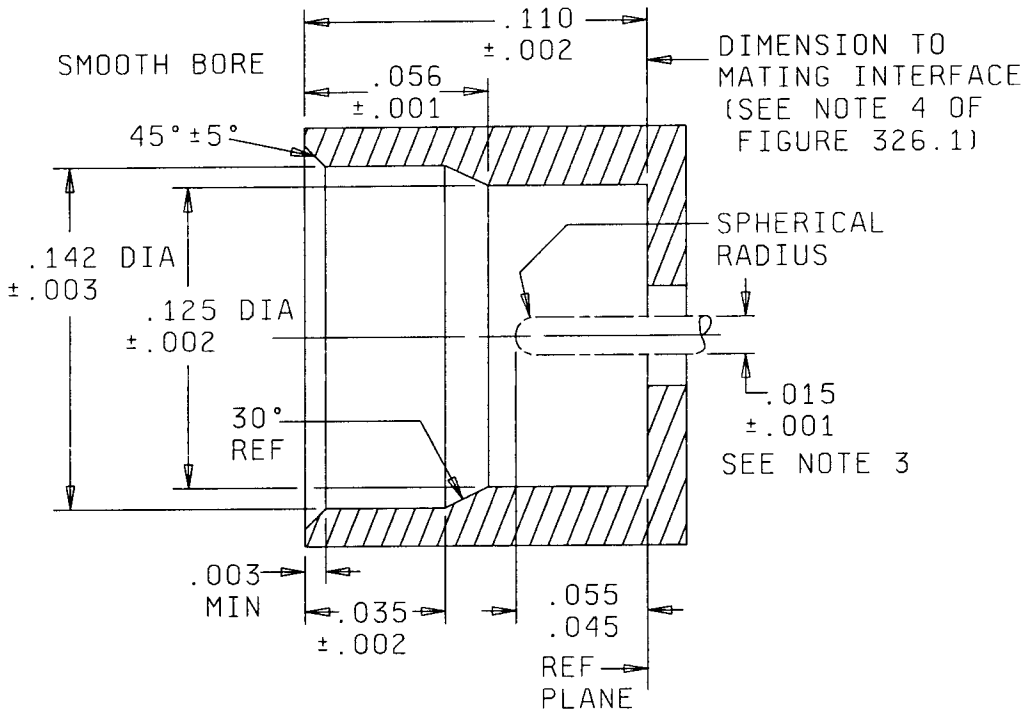

Inches	mm	Inches	mm
.001	0.03	.055	1.40
.002	0.05	.056	1.42
.003	0.08	.110	2.79
.015	0.38	.125	3.18
.035	0.89	.142	3.61
.045	1.14		

NOTES:
1. Dimensions are in inches.
2. Metric equivalents are given for information only.
3. Pin not supplied with shroud.

FIGURE 326-4. Interface, series SMP, pin contact, smooth bore.

NEW

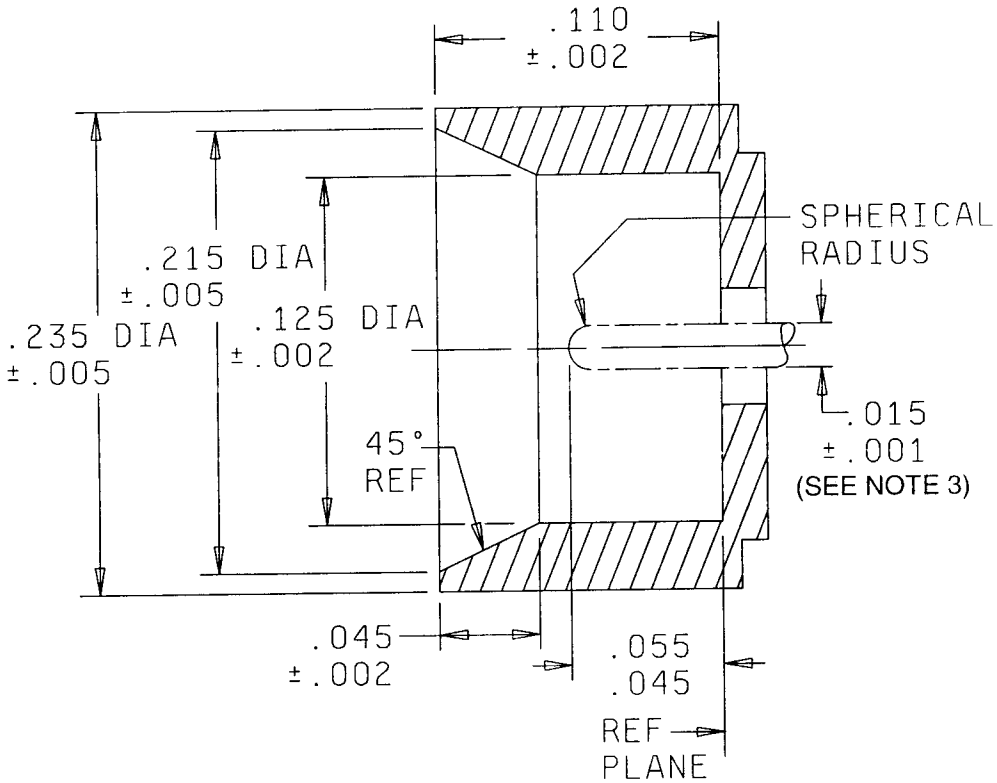

Inches	mm	Inches	mm
.001	0.03	.055	1.40
.002	0.05	.110	2.79
.005	0.13	.125	3.18
.015	0.38	.215	5.46
.045	1.14	.235	5.97

NOTES:
1. Dimensions are in inches.
2. Metric equivalent are given for information only.
3. Pin not supplied with shroud.

FIGURE 326-5. Interface, series SMP, pin contact, catchers mit.

NEW