MILITARY SPECIFICATION SHEET

TOOL KITS, ELECTRICAL CONNECTORS, CONTACTS, AND CONNECTOR AND CABLE ACCESSORIES: TOOL KIT FOR MIL-C-22520/2 CRIMPING TOOL AND POSITIONERS

This specification is approved for use by Naval Air Systems Command, Department of the Navy, and is available for use by all Departments and Agencies of the Department of Defense.

The complete requirements for procuring the tool kit described herein shall consist of this document and the latest issue of Specification MIL-T-83507.

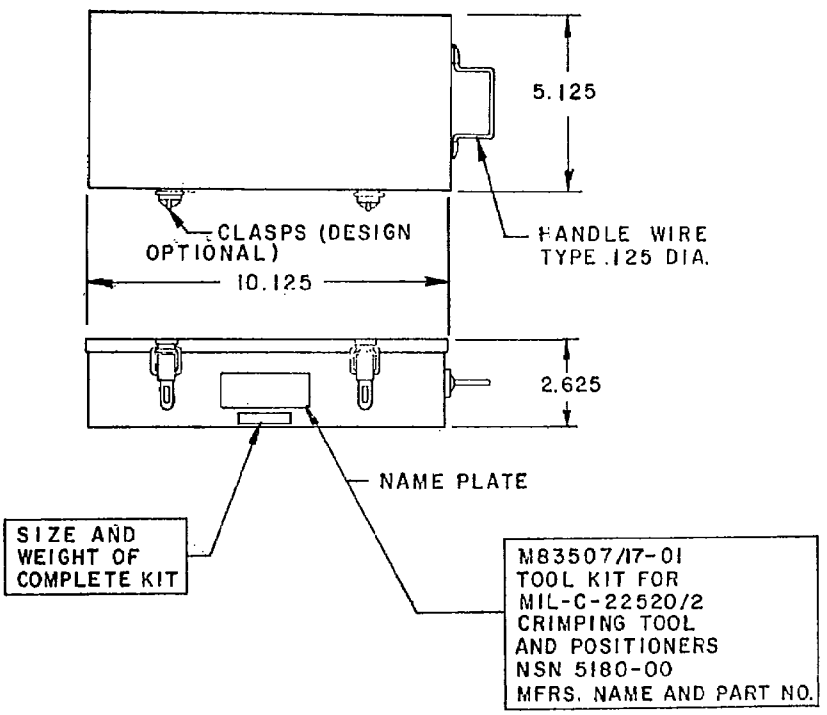

NOTES:
1. For drawing notes and metric equivalents, see figure 5.
2. Part number M83507/17-01 includes case and tools.

FIGURE 1. Tool kit for MIL-C-22520/2 crimping tool and positioners.

Parts List:

(1)	M83507/17-02	-	Tool case assembly.
(1)	M22520/2-01	-	Crimp tool frame.
(1)	M22520/2-02	-	Positioner.
(1)	M22520/2-03	-	Positioner.
(1)	M22520/2-04	-	Positioner.
(1)	M22520/2-05	-	Positioner.
(1)	M22520/2-06	-	Positioner.
(1)	M22520/2-07	-	Positioner.
(1)	M22520/2-08	-	Positioner.
(1)	M22520/2-09	-	Positioner.
(1)	M22520/2-10	-	Positioner.
(1)	M22520/3-1	-	In-service inspection gage.

(1 set) - Contents charts, instruction sheets, and tool selection chart.

FIGURE 1. Tool Kit for MIL-C-22520/2 crimping tool and positioners - Continued.

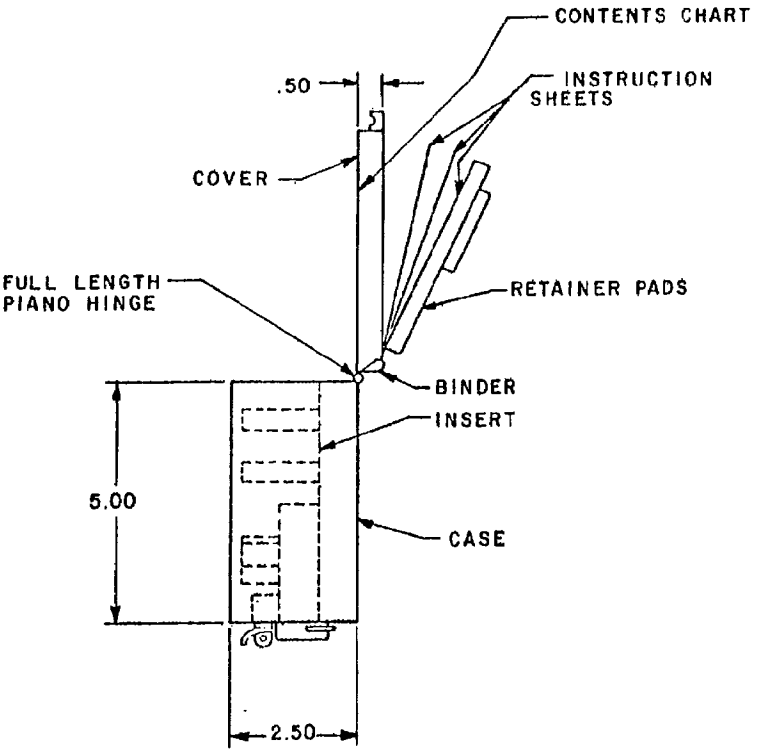

NOTES:
1. See figure 5, note 4.
2. Part number M83507/17-02 for case only (tools not included).

FIGURE 2. Tool case assembly.

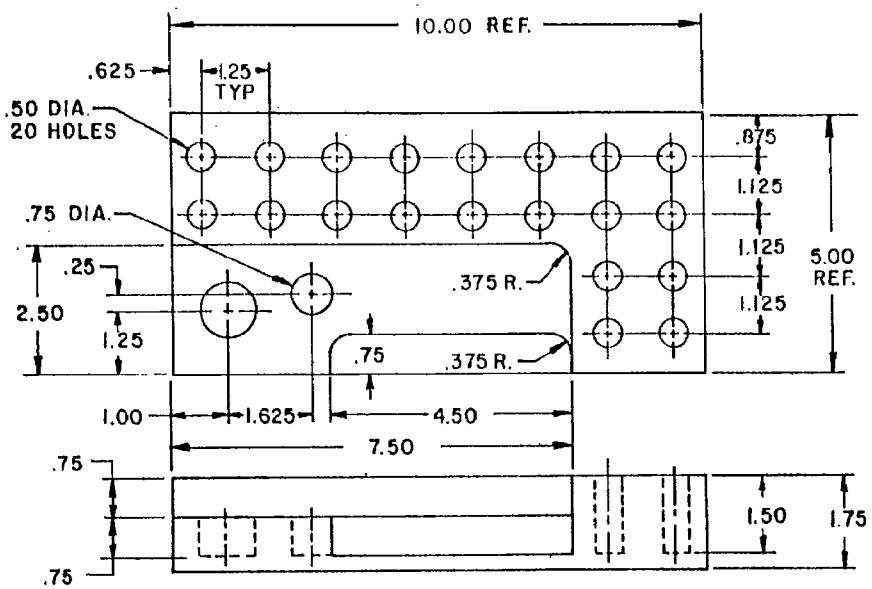

NOTES:
1. For drawing notes and metric equivalents, see figure 5.
2. This insert is part of the tool case assembly (see figure 2).

FIGURE 3. Insert.

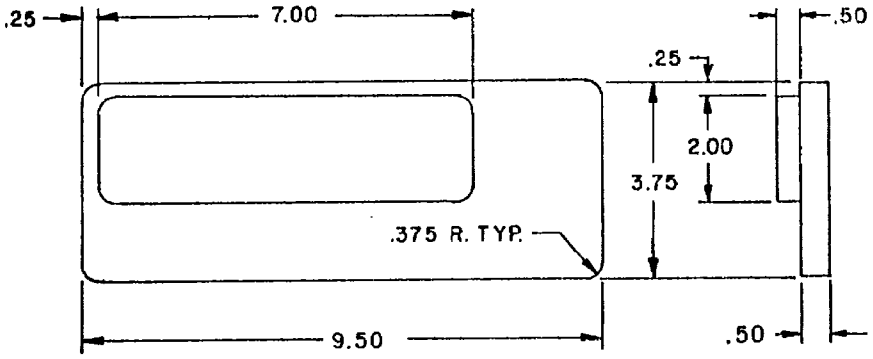

NOTES:
1. For drawing notes and metric equivalents, see figure 5.
2. This retainer is part of the tool case assembly (see figure 2).

FIGURE 4. Retainer.

INCHES	MM	INCHES	MM	INCHES	MM	INCHES	MM	INCHES	MM
.125	3.18	.75	19.0	1.50	38.1	2.625	66.68	7.00	177.8
.25	6.4	.875	22.22	1.625	41.28	3.75	95.25	7.50	190.5
.375	9.52	1.00	25.4	1.75	44.4	4.50	114.3	9.50	241.3
.50	12.7	1.125	28.58	2.00	50.8	5.00	127.0	10.00	254.0
.625	15.88	1.25	31.8	2.50	63.5	5.125	130.18	10.125	257.18

NOTES:
1. Dimensions are in inches.
2. Metric equivalents are given for general information only and are based upon 1.00 inch = 25.4 mm.
3. Unless otherwise specified, tolerances are ±.031 (.79 mm).
4. Remove all burrs, break sharp edges and corners.

FIGURE 5. Drawing notes and metric equivalents.

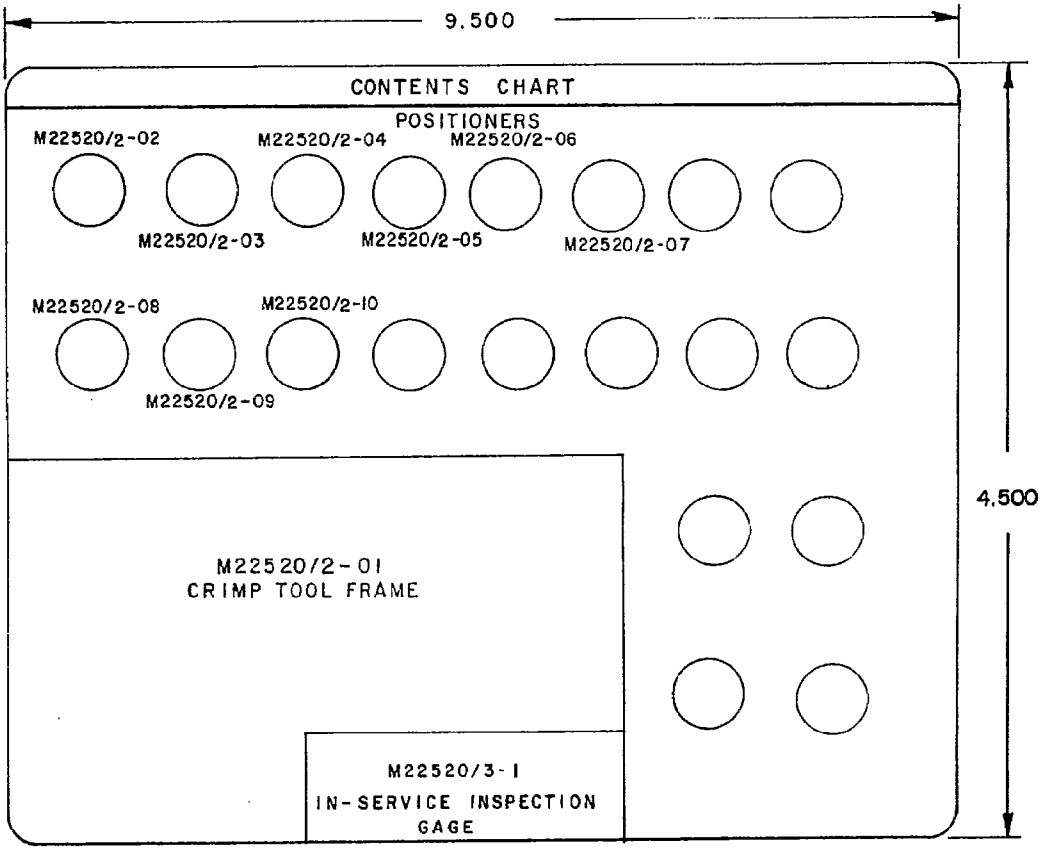

INSTRUCTION SHEETS ARE AS FOLLOWS:

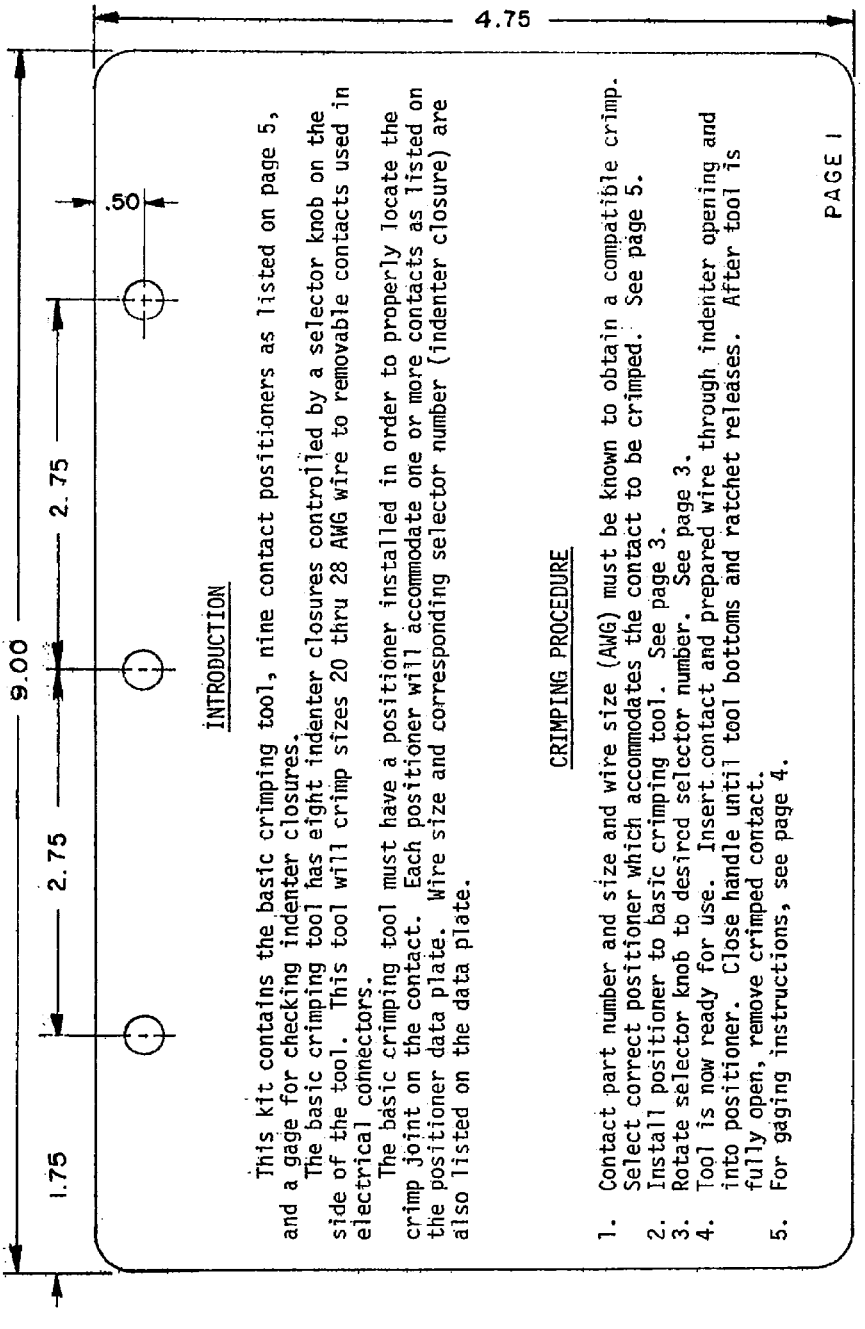

INTRODUCTION

This kit contains the basic crimping tool, nine contact positioners as listed on page 5, and a gage for checking indenter closures.

The basic crimping tool has eight indenter closures controlled by a selector knob on the side of the tool. This tool will crimp sizes 20 thru 28 AWG wire to removable contacts used in electrical connectors.

The basic crimping tool must have a positioner installed in order to properly locate the crimp joint on the contact. Each positioner will accommodate one or more contacts as listed on the positioner data plate. Wire size and corresponding selector number (indenter closure) are also listed on the data plate.

CRIMPING PROCEDURE

1. Contact part number and size and wire size (AWG) must be known to obtain a compatible crimp. Select correct positioner which accommodates the contact to be crimped. See page 5.
2. Install positioner to basic crimping tool. See page 3.
3. Rotate selector knob to desired selector number. See page 3.
4. Tool is now ready for use. Insert contact and prepared wire through indenter opening and into positioner. Close handle until tool bottoms and ratchet releases. After tool is fully open, remove crimped contact.
5. For gaging instructions, see page 4.

PAGE 1

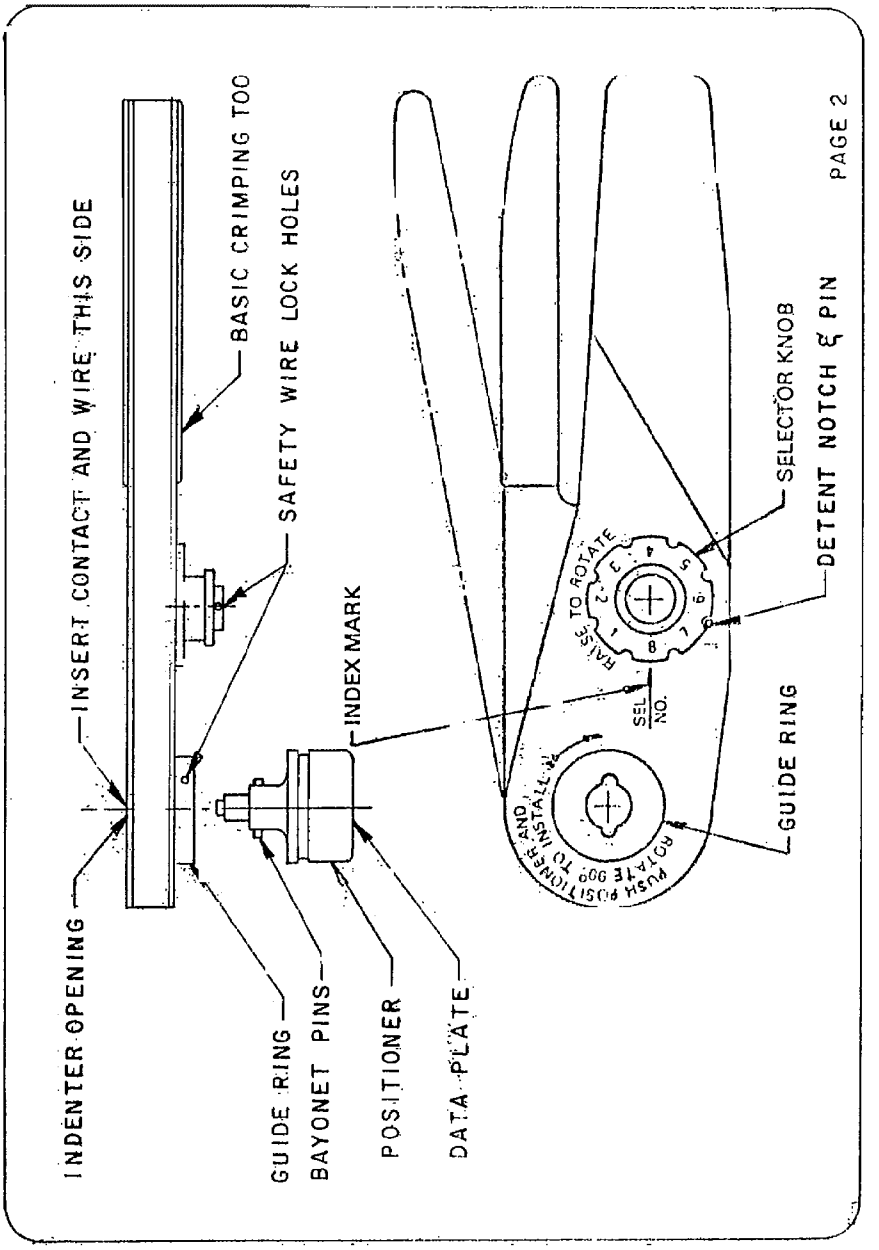
INDENTER OPENING
INSERT CONTACT AND WIRE THIS SIDE
GUIDE RING
BAYONET PINS
POSITIONER
DATA PLATE
INDEX MARK
SAFETY WIRE LOCK HOLES
BASIC CRIMPING TOO
PUSH POSITIONER AND ROTATE 90° TO INSTALL
PAUSE TO ROTATE
SEL NO.
GUIDE RING
SELECTOR KNOB
DETENT NOTCH & PIN
PAGE 2

GENERAL INSTRUCTIONS

Handle should be in open position when installing positioner and rotating selector knob.

TO INSTALL POSITIONER

Align positioner with guide ring as shown on page 2. Bayonet pins will pass thru notches in guide ring. Rotate positioner clockwise 90° until it stops. Release positioner and it will snap into locking position. Safety wire may be used to prevent removal of positioner by unauthorized personnel.

TO SET SELECTOR KNOB

Determine correct selector number (indenter closure) from data plate on end of positioner. Lift selector knob and rotate until desired number is in line with index mark. Release knob when detent notch is in line with detent pin. Selector knob may be locked in any one position with a safety wire.

TOOL IS NOW READY FOR USE

After removing crimped contact from tool, inspect crimped joint for proper location and determine if wire is visible thru inspection hole in side of contact crimp barrel.

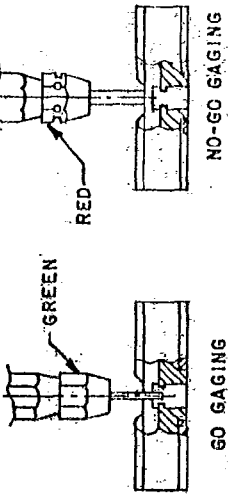

GAGING INSTRUCTIONS

1. Set tool selector knob at number 8.
2. Use M22520/3-1 inspection gage.
3. Go Gaging: Close handles to fully closed position. Insert "Go" gage as shown. Gage must pass freely as shown.
4. No-Go Gaging: Close handles to fully closed position. Insert "No-Go" gage as shown. Gage must not enter between indenter tips.
5. Caution: Do not crimp gage.

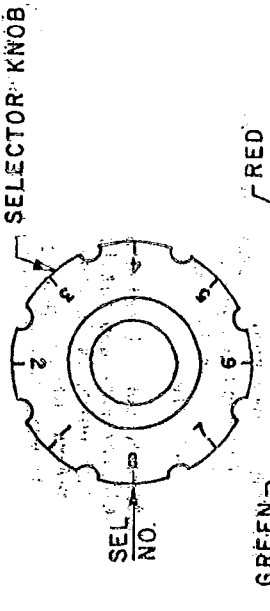

M22520/3-1 INSPECTION GAGE

PAGE 4

USE WITH CONTACTS

MS3192-20
MS3193-20

WIRE	20	22	24	26
SEL.	7	6	5	4

MS24254-20P M39029/4-20-20
MS24255-20S M39029/5-20-20
MS18134-20 M39029/9-20-20
MS18136-20 M39029/10-20-20
M83723/33-20
M83723/34-20

M22520/2-02
POSITIONER

USE WITH CONTACTS

MS3343-23-22 A & B
MS3343-23-28 A & B

WIRE	22	24	26
-23-22 SEL.	5	4	3
WIRE	28	30	32
-23-28 SEL.	5	5	4

MS90460 & MS90461
-23-22, -23-28
A & B

M22520/2-03
POSITIONER

USE WITH CONTACTS

INNER P & S

WIRE	RG178/U	RG196/U
SEL.	1	1

MS18232-1
MS18233-1
MS18265-1,-2
MS18266-1,-2

M22520/2-04
POSITIONER

USE WITH CONTACTS

WIRE	20	22	24
SEL.	7	6	5

M21097/9-01

M22520/2-05
POSITIONER

USE WITH CONTACTS

WIRE	22	24	26	28
-22 SEL.	4	3	2	
-22M SEL.		4	3	2
-22D SEL.	4	3	2	1

MS27491-22 & 22M & 22D
MS27492-22 & 22M & 22D
M24308/12-1

M22520/2-06
POSITIONER

USE WITH CONTACTS

WIRE	22	24	26	28
-22 SEL.	4	3	2	
-22M SEL.		4	3	2
-22D SEL.	4	3	2	1

MS27490-22 & 22M & 22D
MS27655-22D

M22520/2-07
POSITIONER

USE WITH CONTACTS

SEL.	M24308/10-1 M24308/11-1 M39029/11-20-20 M39029/12-20-20	M24308/16 & /17 -1 THRU -5 INNER P & S
4	---	RG-141A, 142A, 142B, 178B, 180B, 188, 195A, 196A, 303, 316/U
5	24	RG-55B, 58C, 223/U
6	22	---
7	20	---

M22520/2-08
POSITIONER

USE WITH CONTACTS

WIRE	22	24	26	28
-22 SEL.	4	3	2	
-22M SEL.		4	3	2
-22D SEL.	4	3	2	1

MS27493-22 & 22M & 22D
MS27494-22 & 22M & 22D
M24308/13-1

M22520/2-09
POSITIONER

MS27490-20
MS27491-20

WIRE	20	22	24
SEL.	6	5	4

MS27492-20
MS27493-20
MS27494-20
MS27655-20

M22520/2-10
POSITIONER

EACH DATA PLATE DEFINES THE CONTACT, AWG, AND SELECTOR NUMBER. CHECK POSITIONER FOR CORRECT DATA PLATE BEFORE USING.

POSITIONER DATA PLATES

PAGE 5

REQUIREMENTS

Design and configuration: See figures 1 through 5.

Materials:
Case and cover (category 3): Sheet metal, 21 gage in accordance with QQ-S-698; gray baked enamel on all metal parts.
Instruction sheets and contents chart: White vinyl 0.020 inch (0.51 mm) thick.
Insert and retainer pad: Fire retardant foamed polythylene in accordance with PPP-C-1752; color is optional.

Clasps, draw pull type with provision for locking device, handles, and hinges: Suitably plated to resist corrosion.

Nameplate: *In accordance with MIL-P-19834.*

Binder: Looseleaf, three ring, 0.562 inch (14.27 mm) ±0.062 inch (1.57 mm) I.D., 2.75 inches (69.9 mm) center distance between rings, securely riveted to inside of cover.

Instruction sheets and contents chart (see pages 4 through 9): Lettering shall be legible and protected with a transparent coating. Contents chart (centered on inside of case cover) shall have pressure sensitive adhesive backing and show the insert cavity configurations and the respective tool part numbers; a list of NSN's will also be supplied.

Part number:
M83507/17-01 - Tool Kit for MIL-C-22520/2 crimping tool and positioners.
M83507/17-02 - Tool case assembly.

QUALIFICATION:

Qualifying activity: Naval Weapons Support Center (Code 3064), Crane, Indiana 47522.

Custodian:
Navy - AS

Review activities:
Navy - EC
DLA - ES

User activity:
Navy - MC

Preparing activity:
Navy - AS

Agent:
DLA - ES

(Project 5180-N112)