FED. SUP CLASS
5930

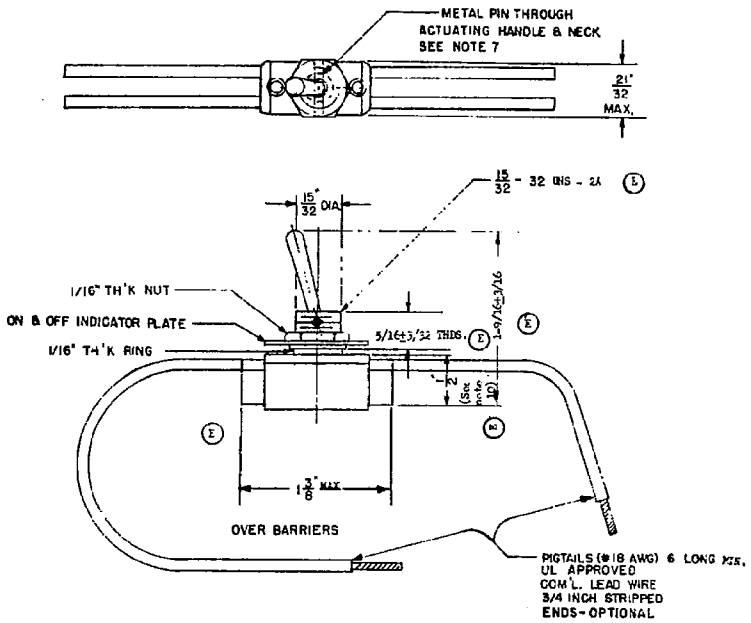

REQUIREMENTS:

1. Switches shall be 3 ampere, 250 volt, double pole, "on-off" action.
2. Material of the box shall be molded or laminated phenolic.
3. Two switches for each 1,000 switches or fraction thereof furnished on each Government order and two switches for each 1,000 switches or fraction thereof purchased by shipbuilding contractors for installations on ships shall be tested for 6,000 operations under rated load and voltage, and shall withstand this test without failure of any part thereof.
4. Commercial tolerances acceptable.
5. Screw-thread Handbook H28 applies.
6. Fire Underwriter's approval required.
7. To increase safety, switch operating handle shall be pinned to the neck of the switch by a metal pin in the approximate position shown.
8. On watertight applications where boot is used the "on-off" indicator plate cannot be used.
9. (E) Unless otherwise noted tolerances are + 1/32.
10. (E) This dimension may be increased to 11/16 when switches are used in new construction lighting fixtures. The 1/2 dimension shall be maintained when switches are procured for stock or repair parts.

NOTES:

1. For design feature purposes, this standard takes precedence over procurement documents referenced herein.
2. Referenced documents shall be of the issue in effect on date of invitations for bid.

MS part No.	National Stock Number
MS16569-1	5930-00-719-9659

(E)

(E) Denotes changes.

APPROVED 4 NOV. 1957 REVISED (D) 22 Feb. 1972 (E) 8 May 1978

P. A. SH Other Cust	INTERNATIONAL INTEREST	TITLE Switch, Toggle, Double Pole, Single Throw (For Use In Lighting Fixtures)	MILITARY STANDARD MS16569(SH)
PROCUREMENT SPECIFICATION NONE	SUPERSEDES:		SHEET 1 OF 1

DD FORM 1 JAN 71 672-1 (LIMITED COORDINATION)

(Project 5930-N494)

This military standard is approved for use by the Naval Sea Systems Command, and is available for use by all Departments and Agencies of the Department of Defense.