NOTICE: When Government drawings, specifications, or other data are used for any purpose other than in connection with a definitely related Government procurement operation, the United States Government thereby incurs no responsibility, nor any obligation whatsoever; and the fact that the Government may have formulated, furnished, or in any way supplied the said drawings, specifications, or other data is not to be regarded by implication or otherwise as in any manner licensing the holder or any other person or corporation, or conveying any rights or permission to manufacture, use, or sell any patented invention that may in any way be related thereto.

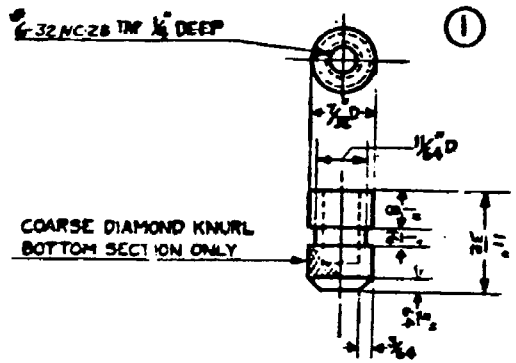

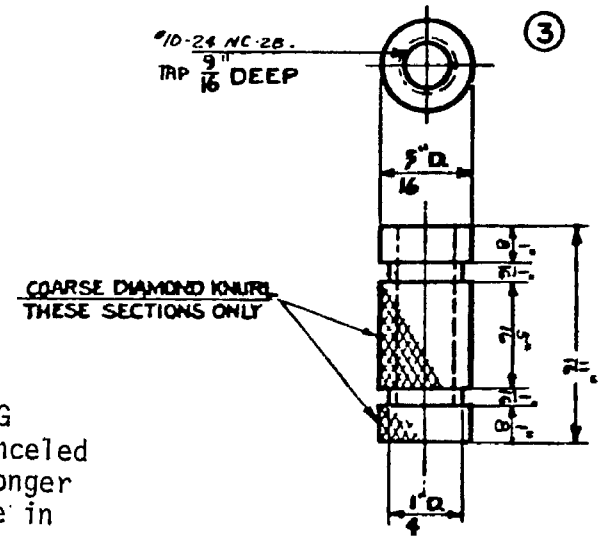

(A) CANCELED AFTER 13 APRIL 1978. NO SUPERSEDING STANDARD. The applications for which the canceled MS 16747 items were originally designed no longer exists. These items are not suitable for use in any other application.

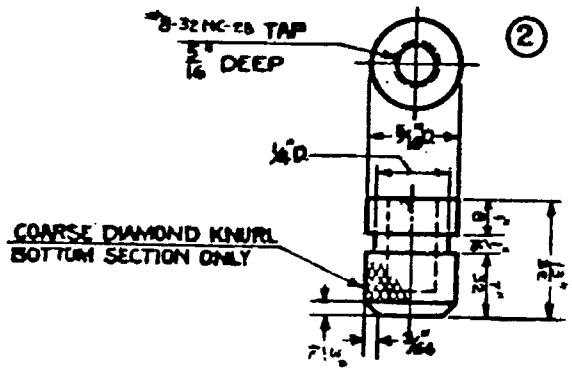

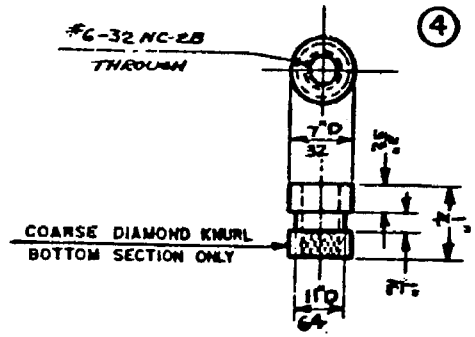

FSC 5935

APPROVED 4 MAR 1959 REVISED (A) 13 APR 78

CUSTODIANS: SHIP 3

Procurement Specification: None

SUPERSEDES: Drawing 9-S-4744-L PCS 1-2-3-4

MILITARY STANDARD

INSERTS, BRASS (FOR MOLDED ELECTRICAL FITTINGS)

MS 16747 (SHIPS)

SHEET 1 OF 4

MS part number	Piece number
MS16747-1	1
MS16747-2	2
MS16747-3	3
MS16747-4	4
MS16747-5	5
MS16747-6	6
MS16747-7	7
MS16747-8	8
MS16747-9	9
MS16747-10	10
MS16747-11	11

NOTES:

1. Material shall be brass, commercial.
2. Tapped holes shall be slightly countersunk.
3. Threads shall be unified nat. course, RH, class 2.
4. Referenced documents shall be the issue in effect on date of invitation for bids.

NOTICE: When Government drawings, specifications, or other data are used for any purpose other than in connection with a definitely related Government procurement operation, the United States Government thereby incurs no responsibility, nor any obligation whatsoever; and the fact that the Government may have formulated, furnished, or in any way supplied the said drawings, specifications, or other data is not to be regarded by implication or otherwise as in any manner licensing the holder or any other person or corporation, or conveying any rights or permission to manufacture, use, or sell any patented invention that may in any way be related thereto.

APPROVED 4 MAR 1959 REVISED

CUSTODIANS		MILITARY STANDARD	MS 16747 (SHIPS)
SHIPS		INSERTS, BRASS (FOR MOLDED ELECTRICAL FITTINGS)	
Procurement Specification None		SUPERSEDES: Drawing 9-S-4744-L	SHEET 2 OF 4

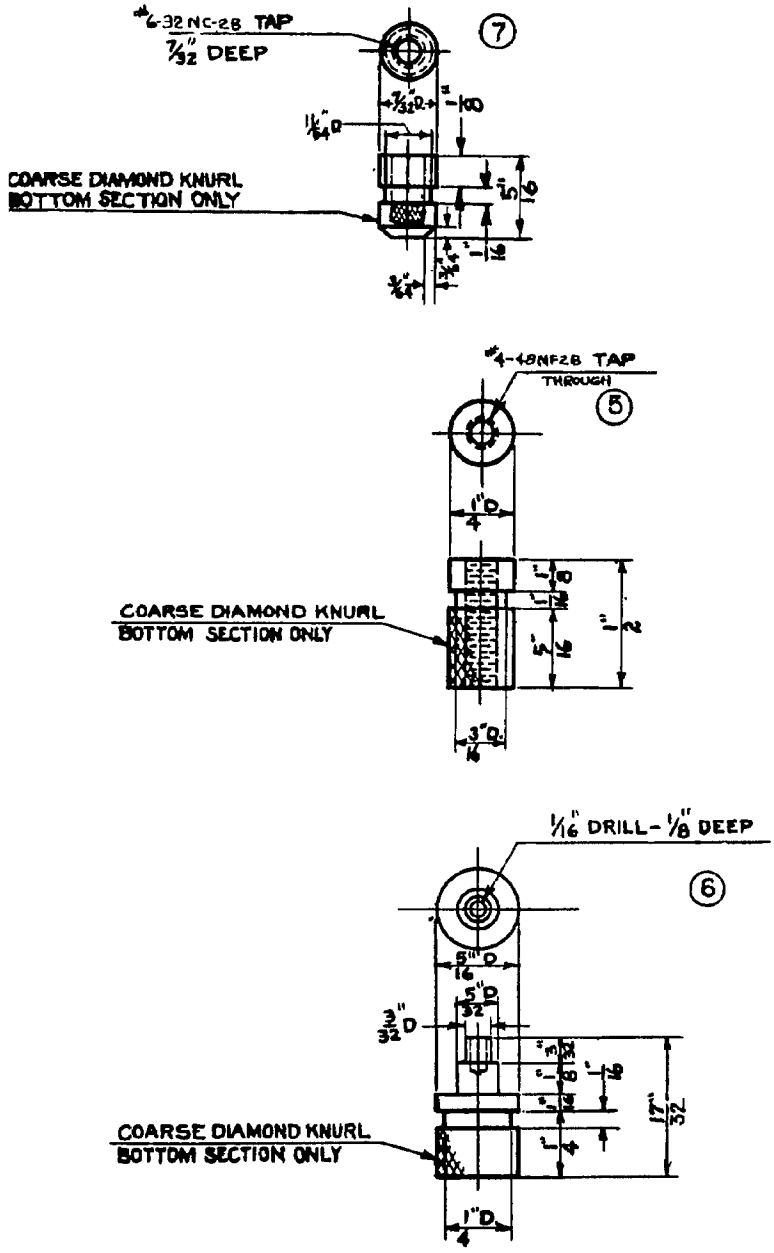

APPROVED 4 MAR 1959 REVISED

NOTICE: When Government drawings, specifications, or other data are used for any purpose other than in connection with a definitely related Government procurement operation, the United States Government thereby incurs no responsibility, nor any obligation whatsoever; and the fact that the Government may have formulated, furnished, or in any way supplied the said drawings, specifications, or other data is not to be regarded by implication or otherwise as in any manner licensing the holder or any other person or corporation, or conveying any rights or permission to manufacture, use, or sell any patented invention that may in any way be related thereto.

CUSTODIANS	MILITARY STANDARD	MS 16747 (SHIPS)
SHIPS	INSERTS, BRASS (FOR MOLDED ELECTRICAL FITTINGS)	
Procurement Specification None.	SUPERSEDES: Drawing 9-S-4744-L PCS 5-7-6	SHEET 3 OF 4

Information Handling Services, DODSTD Issue DW9906

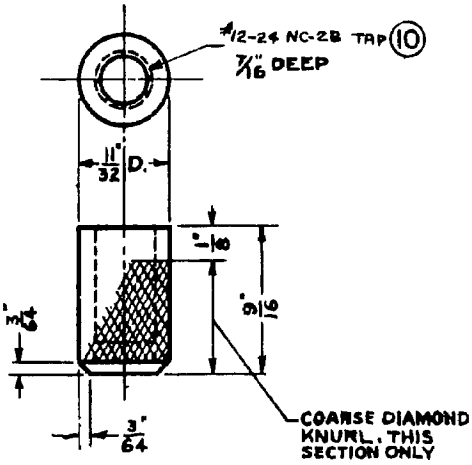

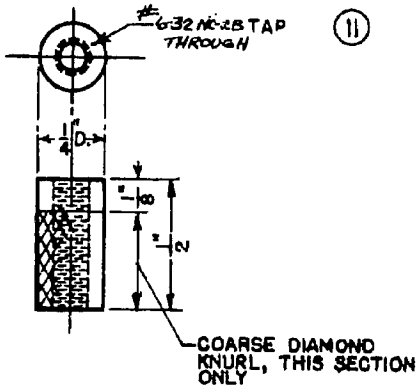

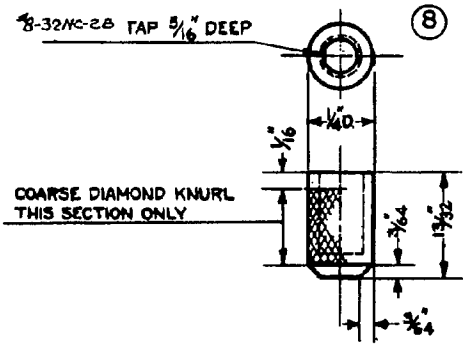

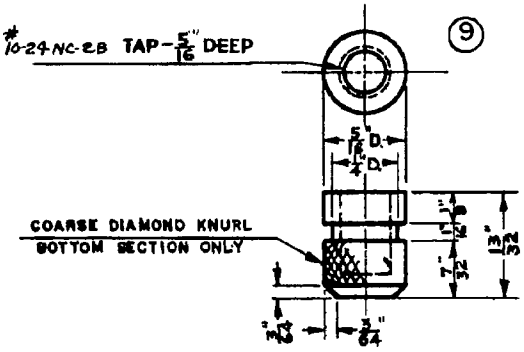

APPROVED 4 MAR 1959 REVISED

CUSTODIANS	MILITARY STANDARD	MS 16747 (SHIPS)
SHIPS	INSERTS, BRASS (FOR MOLDED ELECTRICAL FITTINGS)	
Procurement Specification None	SUPERSEDES: Drawing 9-S-4744-L, PCS 8-9-10-11	SHEET 4 OF 4

DD FORM 672

(Project 5935-0003Sh)

NOTICE: When Government drawings, specifications, or other data are used for any purpose other than in connection with a definitely related Government procurement operation, the United States Government thereby incurs no responsibility, nor any obligation whatsoever; and the fact that the Government may have formulated, furnished, or in any way supplied the said drawings, specifications, or other data is not to be regarded by implication or otherwise as in any manner licensing the holder or any other person or corporation, or conveying any rights or permission to manufacture, use, or sell any patented invention that may in any way be related thereto.